H. J. JACOBS.

UPHOLSTERING ROLL OR BEADING FOR FURNITURE.

APPLICATION FILED NOV. 22, 1920.

1,370,690.

Patented Mar. 8, 1921.

Fig. 1.

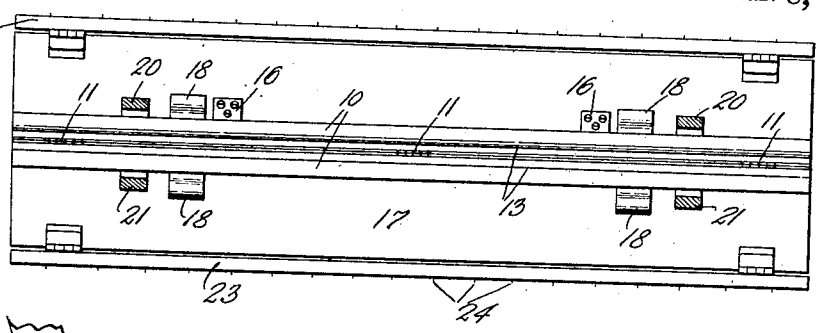

Fig. 2.

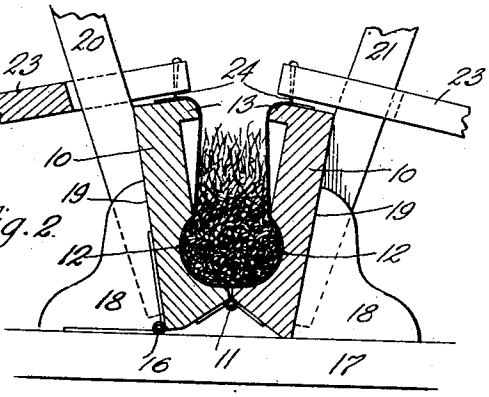

Fig. 3.

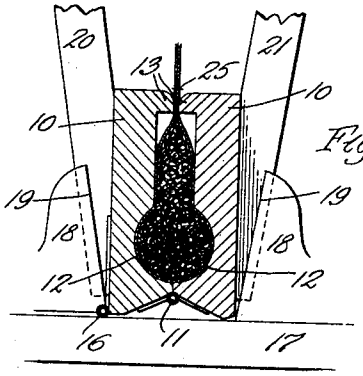

Fig. 4.

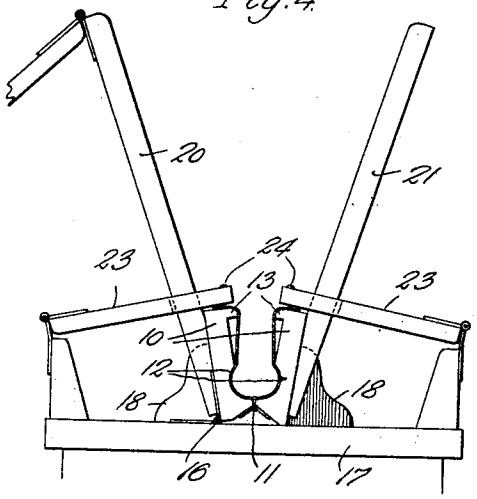

Fig. 5.

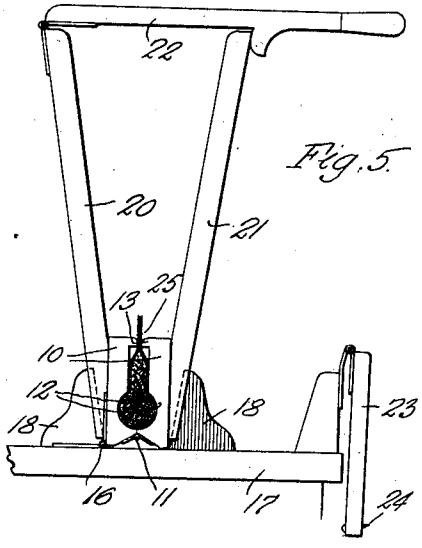

Fig. 6.

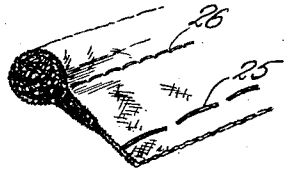

INVENTOR.

Henry J. Jacobs

by Parker & Prochnow.

ATTORNEYS.

UNITED STATES PATENT OFFICE.

HENRY J. JACOBS, OF BUFFALO, NEW YORK.

UPHOLSTERING ROLL OR BEADING FOR FURNITURE.

1,370,690. Specification of Letters Patent. Patented Mar. 8, 1921.

Application filed November 22, 1920. Serial No. 425,634.

To all whom it may concern:

Be it known that I, HENRY J. JACOBS, a citizen of the United States, residing at Buffalo, in the county of Erie and State of New York, have invented a new and useful Improvement in Upholstering Rolls or Beading for Furniture, of which the following is a specification.

This invention relates to methods of and apparatus for making upholstering rolls or beading for furniture.

In certain upholstered furniture, such as chairs, davenports and the like, which include a box or framework in which the cushion springs are contained, it has been the practice to form a stuffed finishing roll or beading on the front or other edges of the seats or cushions. The boxes or frameworks are usually provided with bottom longitudinal and transverse spring supporting wires or strips and a covering of burlap or other material on the bottom of the frame and heretofore the rolls or beads have been formed by securing a strip of burlap or other fabric to the bottom of the frame or to the burlap cover for the bottom of the frame so that the burlap strip projects outwardly from the box frame, then placing a quantity of stuffing material upon the burlap strip and folding the strip back upon itself and stitching or securing it in such a way as to form a bead by the inclosed stuffing material projecting from the outer edge of the frame. After this has been done it is necessary, in an endeavor to secure a bead of uniform diameter and dimensions, to work the bead stuffing material to proper position by means of a needle or awl inserted through the burlap bead covering and then to sew or stitch the inner edges of the bead to the burlap bottom cover. Such methods are tedious and difficult of application and can only be properly carried out by skilled labor and even then by most painstaking application it is impossible to build up beads of uniform shape and dimensions.

The objects of the present invention are to improve methods of construction of upholstering beads or rolls whereby the rolls may be constructed separately from the parts of the furniture on which they are to be used; also to improve methods of making furniture rolls whereby rolls of any desired size or dimensions may be provided in any suitable length; also to provide a method whereby furniture rolls or beads of uniform diameters and dimensions may be quickly and easily constructed by unskilled operatives; also to reduce the cost of manufacturing upholstered furniture generally. Further objects are to provide a simple and practical apparatus for constructing stuffed rolls for upholstered furniture independently of the furniture to which they are to be attached, and to provide improvements in methods of and apparatus for making furniture rolls in the other respects hereinafter described and claimed.

In the accompanying drawings:

Figure 1 is a plan view of a furniture roll forming apparatus embodying the invention.

Fig. 2 is a fragmentary sectional elevation thereof on an enlarged scale showing the forming members in open position.

Fig. 3 is a similar view thereoef showing the forming members in closed position.

Fig. 4 is an end elevation thereof showing the forming members in open position.

Fig. 5 is an end elevation thereof showing the forming members in closed position.

Fig. 6 is a fragmentary perspective of an improved furniture roll manufactured in accordance with this invention.

According to this invention, the stuffed roll or beading is constructed independently of and away from the seat or furniture to which it is to be attached, and for this purpose a mold is provided which is adapted to receive and hold a strip of burlap or other suitable covering fabric in which bead-forming filling material, such as excelsior, moss, hair or the like is placed, and which is provided with means for holding the covering fabric in proper receiving position, and with means for compressing the mass and permitting a preliminary stitching or basting of the molded roll or bead, whereupon the roll or bead may be removed from the apparatus without losing its configuration. The partially finished roll may then be further stitched upon a suitable sewing machine. The completed roll or bead so formed may be readily and easily stitched or secured in place on the seat or furniture.

In the apparatus illustrated, which is considered preferable at this time for practising the method of this invention, there are two opposite hinged and duplicate mold or forming members which are adapted to support a cover strip of burlap or the like in a pouched or filling-receiving position in a mold cavity

formed between said members, whereby excelsior, hair or other suitable filling material may be inserted therein and the mold members then closed to compress the material substantially to the form of the mold cavity and to maintain the roll in such form until it can be permanently secured by stitching or securing to the cover strip. As shown, the mold members 10, which may be of any suitable length, are preferably hinged together as indicated at 11, and are formed with recesses 12 in their inner sides and with projecting upper lips or tongues 13. When the two mold members are closed together, the recesses 12 form a molding cavity substantially of the shape of the roll or bead to be formed. One of the mold members is preferably hinged as at 16 for pivotal movement on a base 17. A pair or pairs of stops or abutment blocks 18 is or are mounted on the base on opposite sides of the mold members, these abutment blocks being preferably formed with inclined faces 19, which contact with the outer sides of the mold members when the mold is opened, to limit the opening movement of the mold members and maintain them in proper material-receiving positions. 20 and 21 designate levers or arms which are attached respectively to the opposite mold members, one of the levers preferably being provided with a suitable hinged latch 22 or other device adapted to engage the other lever to lock the mold members together when the mold is closed. In order to prevent the cover fabric from being dragged down into the mold while the filling material is being packed in the pouch, means are provided for clamping the edges of the cover fabric to the mold members. In the preferred means for this purpose, a pair of boards 23 is hinged on the base and provided with projecting pins or spurs 24 which are adapted to engage the edges of the cover fabric, which project out over the upper edges of the mold members and hold the fabric in proper position to be filled when the mold is open.

In carrying out the improved method, the cover strip of burlap or other fabric is laid in the open mold with its side edges thrown back upon the upper ends of the mold members, the fabric preferably hanging in a straight line from the lips of the mold members to the concave recesses thereof, (as shown in Fig. 4,) the holding boards 23 are then swung over, securely pinning the side edges of the fabric to the upper edges of the mold, and in this position any further outward or opening movement of the molds is prevented by the stops 18. A suitable quantity of excelsior, hair or other suitable filling material is then packed in the pouch formed by the fabric in the mold, the holding boards 23 are then swung back and the levers 20 and 21 are then moved toward one another until the mold is closed, whereupon it is latched in that position by means of the latch 22. As shown in Figs. 3 and 5 of the drawings, after these operations have been completed, the side edges of the fabric will be together and projecting above the upper part of the mold and the roll or bead will have been formed by the recessed portions 12 of the mold. In this position the side edges of the fabric are then stitched or basted together as indicated at 25, Figs. 3 and 5, whereupon the mold may be opened by releasing the latch 22 and actuating the levers 20 and 21, the formed roll withdrawn lengthwise from the mold, and the roll stitched in a suitable sewing machine or otherwise along the line indicated at 26, Fig. 6, to securely bind the stuffing material in the bead.

It will be seen that by this method finishing rolls or beads for furniture may be made in any suitable length, size or shape by the use of molds of appropriate shape and dimensions. As all parts of the open mold are readily accessible to the operator the stuffing material may be so distributed and packed as to provide a roll of uniform thickness throughout. The stitching indicated at 25 may be done in a minimum of time, the portion to be stitched projecting from the molds and being readily accessible to the operator; and the second or subsequent row or rows of stitching indicated at 26 may be readily done upon a sewing machine or other suitable device, thereby resulting in a great saving of time over methods wherein the roll is built up on the article of furniture as the upholstering thereof proceeds. The rolls may be made in sizes to fit particular pieces of furniture or may be made in certain standard thicknesses or dimensions and in standard lengths or strips from which portions may be readily cut. The forming of the rolls and the application of the rolls to the articles of furniture requires no special skill and may be done by the unskilled laborer in less time than has heretofore been taken by the skilled operative to build up the roll or beading upon the article of furniture.

I claim as my invention:

1. A method of making stuffed upholstery rolls or beads, consisting in supporting a cover strip in open pouch-like form in a suitable mold, placing stuffing material in the pouch formed of said cover strip, compressing the cover strip and the stuffing material contained therein to form a roll or bead having a reduced laterally-extending attaching portion, stitching through said attaching portion while said roll is under pressure, relieving the pressure on said roll, and stitching through said attaching portion adjacent said bead.

2. A method of making stuffed upholstery

rolls or beads, consisting in supporting a cover strip in open pouch-like form in an open mold, packing stuffing material in said pouch, compressing said material in said mold to form a stuffed roll or bead having a lateral attaching portion extending therefrom and projecting beyond said mold, stitching through the projecting part of said attaching portion, withdrawing said roll from the mold, and stitching said attaching portion adjacent to said bead.

3. A method of making stuffed upholstery rolls or beads, consisting in supporting a cover strip in pouch-like form in an open mold with the side edges of said fabric projecting out of said mold, detachably securing the side edges of the fabric to prevent movement of said edges inwardly of the mold, packing stuffing material in the pouch formed by said fabric, releasing the side edges of said fabric, closing the mold to compress the cover strip and stuffing material contained therein to form a stuffed roll or bead having a lateral attaching portion, stitching the edges of said fabric projecting from the mold, opening the mold to relieve pressure on the roll or bead contained therein, removing the roll from the mold, and stitching through the fabric and material in the attaching portion adjacent said roll.

4. In a device for forming stuffed furniture rolls or beads, the combination of a base, a pair of mold members hinged together to swing toward and from each other, a hinge connecting one of said mold members to the base, said mold members forming between them a mold cavity, means for detachably securing the opposite edges of a cover strip to the outer edges of said mold members for suspending the cover strip in the mold cavity, means for holding the mold members in closed position, and stops for limiting the outward movement of the mold members.

5. In a device for forming stuffed furniture rolls or beads, the combination of a base, a pair of mold members hinged to swing toward and from each other and forming between them a mold cavity, holding members hinged to said base and arranged to detachably hold the opposite edges of a cover strip on the outer edges of said mold members for suspending the cover strip in the mold cavity, and means for holding the mold members in closed position.

6. In a device for forming stuffed furniture or beads, the combination of means for supporting a cover strip in open pouch-like form to receive stuffing material and to compress said fabric and the inclosed stuffing material to form a bead and a lateral attaching portion, and means for holding said roll compressed to permit stitching of said attaching portion.

Witness my hand this 18th day of November, 1920.

HENRY J. JACOBS.

Correction in Letters Patent No. 1,370,690.

It is hereby certified that in Letters Patent No. 1,370,690, granted March 8, 1921, upon the application of Henry J. Jacobs, of Buffalo, New York, for an improvement in "Upholstering Rolls or Beading for Furniture," an error appears in the printed specification requiring correction as follows: Page 3, line 58, claim 6, before the word "or" insert the word *rolls;* and that the said Letters Patent should be read with this correction therein that the same may conform to the record of the case in the Patent Office.

Signed and sealed this 12th day of April, A. D., 1921.

[SEAL.]

T. E. ROBERTSON,

Commissioner of Patents.

Cl. 45—138.