(12) INTERNATIONAL APPLICATION PUBLISHED UNDER THE PATENT COOPERATION TREATY (PCT)

(19) World Intellectual Property Organization
International Bureau

(43) International Publication Date
23 December 2010 (23.12.2010)

PCT

(10) International Publication Number
WO 2010/148157 A1

(51) International Patent Classification:
H01B 11/10 (2006.01) *H01B 11/20* (2006.01)
H01B 7/08 (2006.01)

(21) International Application Number:
PCT/US2010/038924

(22) International Filing Date:
17 June 2010 (17.06.2010)

(25) Filing Language: English

(26) Publication Language: English

(30) Priority Data:

61/218,739	19 June 2009 (19.06.2009)	US
61/260,881	13 November 2009 (13.11.2009)	US
61/348,800	27 May 2010 (27.05.2010)	US
61/352,473	8 June 2010 (08.06.2010)	US

(71) Applicant *(for all designated States except US)*: **3M INNOVATIVE PROPERTIES COMPANY** [US/US]; 3M Center, Post Office Box 33427, Saint Paul, Minnesota 55133-3427 (US).

(72) Inventor; and

(75) Inventor/Applicant *(for US only)*: **GUNDEL, Douglas B.** [US/US]; 3M Center, Post Office Box 33427, Saint Paul, Minnesota 55133-3427 (US).

(74) Agents: **KUSTERS, Johannes P.M.** et al.; 3M Center, Office of Intellectual Property Counsel, Post Office Box 33427, Saint Paul, Minnesota 55133-3427 (US).

(81) Designated States *(unless otherwise indicated, for every kind of national protection available)*: AE, AG, AL, AM, AO, AT, AU, AZ, BA, BB, BG, BH, BR, BW, BY, BZ, CA, CH, CL, CN, CO, CR, CU, CZ, DE, DK, DM, DO, DZ, EC, EE, EG, ES, FI, GB, GD, GE, GH, GM, GT, HN, HR, HU, ID, IL, IN, IS, JP, KE, KG, KM, KN, KP, KR, KZ, LA, LC, LK, LR, LS, LT, LU, LY, MA, MD, ME, MG, MK, MN, MW, MX, MY, MZ, NA, NG, NI, NO, NZ, OM, PE, PG, PH, PL, PT, RO, RS, RU, SC, SD, SE, SG, SK, SL, SM, ST, SV, SY, TH, TJ, TM, TN, TR, TT, TZ, UA, UG, US, UZ, VC, VN, ZA, ZM, ZW.

(84) Designated States *(unless otherwise indicated, for every kind of regional protection available)*: ARIPO (BW, GH, GM, KE, LR, LS, MW, MZ, NA, SD, SL, SZ, TZ, UG, ZM, ZW), Eurasian (AM, AZ, BY, KG, KZ, MD, RU, TJ, TM), European (AL, AT, BE, BG, CH, CY, CZ, DE, DK, EE, ES, FI, FR, GB, GR, HR, HU, IE, IS, IT, LT, LU, LV, MC, MK, MT, NL, NO, PL, PT, RO, SE, SI, SK, SM, TR), OAPI (BF, BJ, CF, CG, CI, CM, GA, GN, GQ, GW, ML, MR, NE, SN, TD, TG).

Declarations under Rule 4.17:

— *as to applicant's entitlement to apply for and be granted a patent (Rule 4.17(ii))*

— *as to the applicant's entitlement to claim the priority of the earlier application (Rule 4.17(iii))*

Published:

— *with international search report (Art. 21(3))*

— *before the expiration of the time limit for amending the claims and to be republished in the event of receipt of amendments (Rule 48.2(h))*

(54) Title: SHIELDED ELECTRICAL CABLE AND METHOD OF MAKING

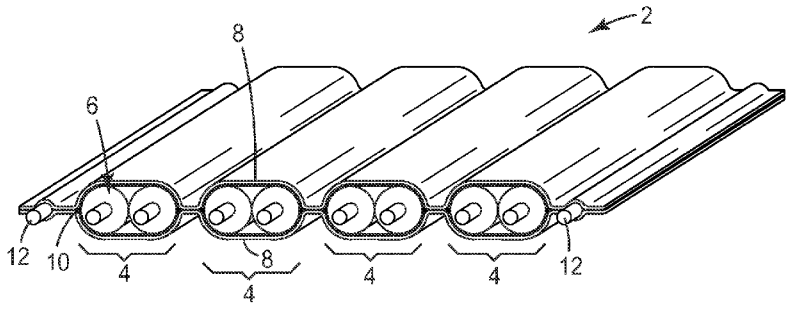

FIG. 1

(57) Abstract: A shielded electrical cable (2) comprises a conductor set (4) including one or more substantially parallel longitudinal insulated conductors (6), two generally parallel shielding films (8) disposed around the conductor set (4), and a conformable adhesive layer (10) disposed between the shielding films (8) and bonding the shielding films (8) to each other on both sides of the conductor set (4). The shielded electrical cable (2) may further include at least one ground conductor (12). A method of making a shielded electrical cable (2) includes providing a conductor set (4) including one or more substantially parallel longitudinal insulated conductors (6), forming two generally parallel shielding films (8) around the conductor set (4), and bonding the shielding films (8) to each other on both sides of the conductor set (4).

WO 2010/148157 A1

SHIELDED ELECTRICAL CABLE AND METHOD OF MAKING

TECHNICAL FIELD

The present disclosure relates generally to shielded electrical cables for the transmission of electrical signals. In particular, the present invention relates to shielded electrical cables that can be mass-terminated and provide high speed electrical properties.

BACKGROUND

Electrical cables for transmission of electrical signals are well known. One common type of electrical cable is a coaxial cable. Coaxial cables generally include an electrically conductive wire surrounded by an insulator. The wire and insulator are surrounded by a shield, and the wire, insulator, and shield are surrounded by a jacket. Another common type of electrical cable is a shielded electrical cable comprising one or more insulated signal conductors surrounded by a shielding layer formed, for example, by a metal foil. To facilitate electrical connection of the shielding layer, a further un-insulated conductor is sometimes provided between the shielding layer and the insulation of the signal conductor or conductors. Both these common types of electrical cable normally require the use of specifically designed connectors for termination and are often not suitable for the use of mass-termination techniques, i.e., the simultaneous connection of a plurality of conductors to individual contact elements, such as, e.g., electrical contacts of an electrical connector or contact elements on a printed circuit board. Although electrical cables have been developed to facilitate these mass-termination techniques, these cables often have limitations in the ability to mass-produce them, in the ability to prepare their termination ends, in their flexibility, and in their electrical performance. In view of the advancements in high speed electrical and electronic components, a continuing need exists for electrical cables that are capable of transmitting high speed signals, facilitate mass-termination techniques, are cost-effective, and can be used in a large number of applications.

SUMMARY

In one aspect, the present invention provides a shielded electrical cable including a conductor set, two generally parallel shielding films disposed around the conductor set,

and a conformable adhesive layer disposed between the shielding films and bonding the shielding films to each other on both sides of the conductor set. The conductor set includes one or more substantially parallel longitudinal insulated conductors.

In another aspect, the present invention provides a shielded electrical cable including a plurality of spaced apart conductor sets arranged generally in a single plane, two generally parallel shielding films disposed around the conductor sets, and a conformable adhesive layer disposed between the shielding films and bonding the shielding films to each other on both sides of each conductor set. Each conductor set includes one or more substantially parallel longitudinal insulated conductors.

In another aspect, the present invention provides a shielded electrical cable including a conductor set including one or more substantially parallel longitudinal insulated conductors, at least one longitudinal ground conductor spaced apart from and extending in substantially the same direction as the one or more insulated conductors, two generally parallel shielding films disposed around the conductor set and the ground conductor, and a conformable adhesive layer disposed between the shielding films and bonding the shielding films to each other on both sides of the conductor set and the ground conductor. The conductor set and the ground conductor are arranged generally in a single plane.

In another aspect, the present invention provides a method of making a shielded electrical cable including providing a conductor set including one or more substantially parallel longitudinal insulated conductors, forming two generally parallel shielding films around the conductor set, and bonding the shielding films to each other on both sides of the conductor set with a conformable adhesive layer.

In another aspect, the present invention provides a method of making a shielded electrical cable including providing a plurality of spaced apart conductor sets arranged generally in a single plane, forming two generally parallel shielding films around the conductor sets, and bonding the shielding films to each other on both sides of each conductor set with a conformable adhesive layer. Each conductor set includes one or more substantially parallel longitudinal insulated conductors.

In another aspect, the present invention provides a method of making a shielded electrical cable including providing a conductor set including one or more substantially parallel longitudinal insulated conductors, providing at least one longitudinal ground

conductor spaced apart from and extending in substantially the same direction as the one or more insulated conductors, forming two generally parallel shielding films around the conductor set and the ground conductor, and bonding the shielding films to each other on both sides of the conductor set and the ground conductor with a conformable adhesive layer. The conductor set and the ground conductor are arranged generally in a single plane,

In another aspect, the present invention provides an electrical assembly including a shielded electrical cable and an electrically conductive cable clip. The shielded electrical cable includes a conductor set including one or more substantially parallel longitudinal insulated conductors, two generally parallel shielding films disposed around the conductor set, and a conformable adhesive layer disposed between the shielding films and bonding the shielding films to each other on both sides of the conductor set. The electrically conductive cable clip is configured for termination to a ground reference. At least one of the shielding films electrically contacts the cable clip.

The above summary of the present invention is not intended to describe each disclosed embodiment or every implementation of the present invention. The Figures and detailed description that follow below more particularly exemplify illustrative embodiments.

BRIEF DESCRIPTION OF THE DRAWINGS

Fig. 1 is a perspective view of an exemplary embodiment of a shielded electrical cable according to an aspect of the present invention.

Figs. 2a-2e are front cross-sectional views of five other exemplary embodiments of a shielded electrical cable according to aspects of the present invention.

Fig. 3 is a perspective view of two shielded electrical cables of Fig. 1 terminated to a printed circuit board.

Figs. 4a-4d are top views of an exemplary termination process of a shielded electrical cable according to an aspect of the present invention.

Fig. 5 is a top view of another exemplary embodiment of a shielded electrical cable according to an aspect of the present invention.

Fig. 6 is a top view of another exemplary embodiment of a shielded electrical cable according to an aspect of the present invention.

Figs. 7a-7d are front cross-sectional views of four other exemplary embodiments of a shielded electrical cable according to aspects of the present invention.

Figs. 8a-8c are front cross-sectional views of three other exemplary embodiments of a shielded electrical cable according to aspects of the present invention.

Figs. 9a-9b are top and partially cross-sectional front views, respectively, of an exemplary embodiment of an electrical assembly according to an aspect of the present invention terminated to a printed circuit board.

Figs. 10a-10e and 10f-10g are perspective and front cross-sectional views, respectively, illustrating an exemplary method of making a shielded electrical cable according to an aspect of the present invention.

Figs. 11a-11c are front cross-sectional views illustrating a detail of an exemplary method of making a shielded electrical cable according to an aspect of the present invention.

DETAILED DESCRIPTION

In the following detailed description of the preferred embodiments, reference is made to the accompanying drawings that form a part hereof. The accompanying drawings show, by way of illustration, specific embodiments in which the invention may be practiced. It is to be understood that other embodiments may be utilized, and structural or logical changes may be made without departing from the scope of the present invention. The following detailed description, therefore, is not to be taken in a limiting sense, and the scope of the invention is defined by the appended claims.

Referring now to the Figures, Fig. 1 illustrates an exemplary embodiment of a shielded electrical cable according to an aspect of the present invention. Shielded electrical cable 2 includes a plurality of spaced apart conductor sets 4 arranged generally in a single plane. Each conductor set includes two substantially parallel longitudinal insulated conductors 6. Insulated conductors 6 may include insulated signal wires, insulated power wires, or insulated ground wires. Two generally parallel shielding films 8 are disposed around conductor sets 4. A conformable adhesive layer 10 is disposed between shielding films 8 and bonds shielding films 8 to each other on both sides of each conductor set 4. In one embodiment, conductor sets 4 have a substantially curvilinear cross-sectional shape, and shielding films 8 are disposed around conductor sets 4 such as to substantially conform to and maintain the cross-sectional shape. Maintaining the cross-sectional shape maintains the electrical characteristics of conductor sets 4 as intended in the design of conductor sets 4. This is an advantage over some conventional shielded electrical cables

where disposing a conductive shield around a conductor set changes the cross-sectional shape of the conductor set.

Although in the embodiment illustrated in Fig. 1, each conductor set 4 includes two insulated conductors 6, in other embodiments, each conductor set 4 may include one or more insulated conductors 6. For example, instead of shielded electrical cable 2 including four conductor sets 4 each including two insulated conductors 6 as shown in Fig. 1, shielded electrical cable 2 may include one conductor set 4 including eight insulated conductors 6, or eight conductor sets 4 each including one insulated conductor 6. This flexibility in arrangements of conductor sets 4 and insulated conductors 6 allows shielded electrical cable 2 to be configured suitable for the intended application. For example, conductor sets 4 and insulated conductors 6 may be configured to form a multiple twinaxial cable, i.e., multiple conductor sets 4 each including two insulated conductors 6, a multiple coaxial cable, i.e., multiple conductor sets each including one insulated conductor 6, or a combination thereof. In other embodiments, a conductor set 4 may further include a conductive shield (not shown) disposed around the one or more insulated conductors 6, and an insulative jacket (not shown) disposed around the conductive shield.

In the embodiment illustrated in Fig. 1, shielded electrical cable 2 further includes optional longitudinal ground conductors 12. Ground conductors 12 may include ground wires or drain wires. Ground conductors 12 are spaced apart from and extend in substantially the same direction as insulated conductors 6. Conductor sets 4 and ground conductors 12 are arranged generally in a single plane. Shielding films 8 are disposed around ground conductors 12 and conformable adhesive layer 10 bonds shielding films 8 to each other on both sides of ground conductors 12. Ground conductors 12 may electrically contact at least one of shielding films 8.

Figs. 2a-2e illustrate various exemplary embodiments of a shielded electrical cable according to aspects of the present invention. Figs. 2a-2e are specifically intended to illustrate various examples of arrangements of conductors disposed between two shielding films.

Referring to Fig. 2a, shielded electrical cable 102 includes a single conductor set 104. Conductor set 104 includes a single longitudinal insulated conductor 106. Two generally parallel shielding films 108 are disposed around conductor set 104. A conformable adhesive layer 110 is disposed between shielding films 108 and bonds

shielding films 108 to each other on both sides of conductor set 104. Shielded electrical cable 102 further includes optional longitudinal ground conductors 112. Ground conductors 112 are spaced apart from and extend in substantially the same direction as insulated conductor 106. Conductor set 104 and ground conductors 112 are arranged generally in a single plane. Shielding films 108 are disposed around ground conductors 112 and conformable adhesive layer 110 bonds shielding films 108 to each other on both sides of ground conductors 112. Ground conductors 112 may electrically contact at least one of shielding films 108. Insulated conductor 106 is effectively arranged in a coaxial or single ended cable arrangement.

Referring to Fig. 2b, shielded electrical cable 202 is similar to shielded electrical cable 102 illustrated in Fig. 2a. Where shielded electrical cable 102 includes a single conductor set 104 including a single longitudinal insulated conductor 106, shielded electrical cable 202 includes a single conductor set 204 including two substantially parallel longitudinal insulated conductors 206. Insulated conductors 206 are arranged generally in a single plane and effectively in a twinaxial or differential pair cable arrangement.

Referring to Fig. 2c, shielded electrical cable 302 is similar to shielded electrical cable 102 illustrated in Fig. 2a. Where shielded electrical cable 102 includes a single conductor set 104 including a single longitudinal insulated conductor 106, shielded electrical cable 302 includes a single conductor set 304 including two longitudinal insulated conductors 306. Insulated conductors 306 are arranged effectively in a twisted pair cable arrangement, whereby insulated conductors 306 twist around each other in longitudinal direction.

Referring to Fig. 2d, shielded electrical cable 402 is similar to shielded electrical cable 102 illustrated in Fig. 2a. Where shielded electrical cable 102 includes a single conductor set 104 including a single longitudinal insulated conductor 106, shielded electrical cable 402 includes a single conductor set 404 including four longitudinal insulated conductors 406. Insulated conductors 406 are arranged effectively in a quad cable arrangement, whereby insulated conductors 406 may twist around each other in longitudinal direction, or may be substantially parallel.

Referring back to Figs. 2a-2d, further embodiments of shielded electrical cables according to aspects of the present invention may include a plurality of spaced apart conductor sets 104, 204, 304 or 404, or combinations thereof, arranged generally in a

single plane. Optionally, the shielded electrical cables may include a plurality of ground conductors 112 spaced apart from and extending generally in the same direction as the insulated conductors of the conductor sets, wherein the conductor sets and ground conductors are arranged generally in a single plane. Fig. 2e illustrates an exemplary embodiment of such a shielded electrical cable.

Referring to Fig. 2e, shielded electrical cable 502 includes a plurality of spaced apart conductor sets 104, 204 arranged generally in a single plane. Shielded electrical cable 502 further includes optional ground conductors 112 disposed between conductor sets 104, 204 and at both ends of shielded electrical cable 502. Two generally parallel shielding films 508 are disposed around conductor sets 104, 204 and ground conductors 112. A conformable adhesive layer 510 is disposed between shielding films 508 and bonds shielding films 508 to each other on both sides of each conductor set 104, 204 and each ground conductor. Shielded electrical cable 502 includes a combination of coaxial cable arrangements (conductor sets 104) and a twinaxial cable arrangement (conductor set 204) and may therefore be referred to as a hybrid cable arrangement.

Fig. 3 illustrates two shielded electrical cables 2 terminated to a printed circuit board 14. Because insulated conductors 6 and ground conductors 12 are arranged generally in a single plane, shielded electrical cables 2 are well suited for mass-stripping, i.e., the simultaneous stripping of shielding films 8 and insulated conductors 6, and mass-termination, i.e., the simultaneous terminating of the stripped ends of insulated conductors 6 and ground conductors 12, which allows a more automated cable assembly process. This is an advantage of the shielded electrical cables according to aspects of the present invention. In Fig. 3, the stripped ends of insulated conductors 6 and ground conductors 12 are terminated to contact elements 16 on printed circuit board 14. In other embodiments, the stripped ends of insulated conductors 6 and ground conductors 12 may be terminated to any suitable individual contact elements of any suitable termination point, such as, e.g., electrical contacts of an electrical connector.

Figs. 4a-4d illustrate an exemplary termination process of shielded electrical cable 2 to printed circuit board 14. This termination process can be a mass-termination process and includes the steps of stripping (illustrated in Figs. 4a-4b), aligning (illustrated in Fig. 4c), and terminating (illustrated in Fig. 4d). When forming shielded electrical cable 2, the arrangement of conductor sets 4, insulated conductors 6, and ground conductors 12 of

shielded electrical cable 2 may be matched to the arrangement of contact elements 16 on printed circuit board 14, which would eliminate any significant manipulation of the end portions of shielded electrical cable 2 during alignment or termination.

In the step illustrated in Fig. 4a, an end portion 8a of shielding films 8 is removed. Any suitable method may be used, such as, e.g., mechanical stripping or laser stripping. This step exposes an end portion of insulated conductors 6 and ground conductors 12. In one aspect, mass-stripping of end portion 8a of shielding films 8 is possible because they form an integrally connected layer that is separate from the insulation of insulated conductors 6. Removing shielding films 8 from insulated conductors 6 allows protection against electrical shorting at these locations and also provides independent movement of the exposed end portions of insulated conductors 6 and ground conductors 12. In the step illustrated in Fig. 4b, an end portion 6a of the insulation of insulated conductors 6 is removed. Any suitable method may be used, such as, e.g., mechanical stripping or laser stripping. This step exposes an end portion of the conductor of insulated conductors 6. In the step illustrated in Fig. 4c, shielded electrical cable 2 is aligned with printed circuit board 14 such that the end portions of the conductors of insulated conductors 6 and the end portions of ground conductors 12 of shielded electrical cable 2 are aligned with contact elements 16 on printed circuit board 14. In the step illustrated in Fig. 4d, the end portions of the conductors of insulated conductors 6 and the end portions of ground conductors 12 of shielded electrical cable 2 are terminated to contact elements 16 on printed circuit board 14. Examples of suitable termination methods that may be used include soldering, welding, crimping, mechanical clamping, and adhesively bonding, to name a few.

Fig. 5 illustrates another exemplary embodiment of a shielded electrical cable according to an aspect of the present invention. Shielded electrical cable 602 is similar to shielded electrical cable 2 illustrated in Fig. 1. In addition, shielded electrical cable 602 includes a plurality of longitudinal splits 18 disposed between conductor sets 4. Splits 18 separate individual conductor sets 4 at least along a portion of the length of shielded electrical cable 602, thereby increasing at least the lateral flexibility of shielded electrical cable 602. This allows shielded electrical cable 602 to be placed more easily into a curvilinear outer jacket, e.g. In other embodiments, splits 18 may be placed such as to separate individual or multiple conductor sets 4 and ground conductors 12. To maintain

the spacing of conductor sets 4 and ground conductors 12, splits 18 may be discontinuous along the length of shielded electrical cable 602. To maintain the spacing of conductor sets 4 and ground conductors 12 in at least one end portion A of shielded electrical cable 602 and thereby maintaining mass-termination capability, splits 18 may not extend into one or both end portions A. Splits 18 may be formed in shielded electrical cable 602 using any suitable method, such as, e.g., laser cutting or punching. Instead of or in combination with longitudinal splits, other suitable shapes of openings may be formed in shielded electrical cable 602, such as, e.g., holes, e.g., to increase at least the lateral flexibility of shielded electrical cable 602.

Fig. 6 illustrates another exemplary embodiment of a shielded electrical cable according to an aspect of the present invention. Shielded electrical cable 702 is similar to shielded electrical cable 602 illustrated in Fig. 5. Effectively, in shielded electrical cable 702, one of conductor sets 4 is replaced by two ground conductors 12. Shielded electrical cable 702 includes longitudinal splits 18 and 18'. Split 18 separates individual conductor sets 4 along a portion of the length of shielded electrical cable 702 and does not extend into end portions A of shielded electrical cable 702. Split 18' separates individual conductor sets 4 along the length of shielded electrical cable 702 and extends into end portions A of shielded electrical cable 702, which effectively splits shielded electrical cable 702 into two individual shielded electrical cables 702', 702". Shielding films 8 and ground conductors 12 provide an uninterrupted ground plane in each of the individual shielded electrical cables 702', 702". This exemplary embodiment illustrates the advantage of the parallel processing capability of the shielded electrical cables according to aspects of the present invention, whereby multiple shielded electrical cables may be formed simultaneously.

Figs. 7a-7d illustrate four other exemplary embodiments of a shielded electrical cable according to aspects of the present invention. Figs. 7a-7e are specifically intended to illustrate various examples of constructions of the shielding films of the shielded electrical cables. In one aspect, at least one of the shielding films may include a conductive layer and a non-conductive polymeric layer. The conductive layer may include any suitable conductive material, including but not limited to copper, silver, aluminum, gold, and alloys thereof. The non-conductive polymeric layer may include any suitable polymeric material, including but not limited to polyester, polyimide, polyamide-imide,

polytetrafluoroethylene, polypropylene, polyethylene, polyphenylene sulfide, polyethylene naphthalate, polycarbonate, silicone rubber, ethylene propylene diene rubber, polyurethane, acrylates, silicones, natural rubber, epoxies, and synthetic rubber adhesive. The non-conductive polymeric layer may include one or more additives and/or fillers to provide properties suitable for the intended application. In another aspect, at least one of the shielding films may include a laminating adhesive layer disposed between the conductive layer and the non-conductive polymeric layer. In another aspect, at least one of the shielding films may include a stand-alone conductive film. The construction of the shielding films may be selected based on a number of design parameters suitable for the intended application, such as, e.g., flexibility, electrical performance, and configuration of the shielded electrical cable (such as, e.g., presence and location of ground conductors). In one embodiment, the shielding films include an integrally formed shielding film. In one embodiment, the shielding films have a thickness in the range of 0.01 mm to 0.05 mm. The shielding films provide isolation, shielding, and precise spacing between the conductor sets, and enable a more automated and lower cost cable manufacturing process. In addition, the shielding films prevent a phenomenon known as "signal suck-out" or resonance, whereby high signal attenuation occurs at a particular frequency range. This phenomenon typically occurs in conventional shielded electrical cables where a conductive shield is wrapped around a conductor set.

Referring to Fig. 7a, shielded electrical cable 802 includes a single conductor set 804. Conductor set 804 includes two substantially parallel longitudinal insulated conductors 806. Two generally parallel shielding films 808 are disposed around conductor set 804. Shielding films 808 include a conformable adhesive layer 810 that bonds shielding films 808 to each other on both sides of conductor set 804. Insulated conductors 806 are arranged generally in a single plane and effectively in a twinaxial or differential pair cable arrangement. Shielding films 808 include a conductive layer 808a and a non-conductive polymeric layer 808b. Non-conductive polymeric layer 808b faces insulated conductors 806. Conductive layer 808a may be deposited onto non-conductive polymeric layer 808b using any suitable method.

Referring to Fig. 7b, shielded electrical cable 902 includes a single conductor set 904. Conductor set 904 includes two substantially parallel longitudinal insulated conductors 906. Two generally parallel shielding films 908 are disposed around conductor

set 904. Shielding films 908 include a conformable adhesive layer 910 that bonds shielding films 908 to each other on both sides of conductor set 904. Insulated conductors 906 are arranged generally in a single plane and effectively in a twinaxial or differential pair cable arrangement. Shielding films 908 include a conductive layer 908a and a non-conductive polymeric layer 908b. Conductive layer 908a faces insulated conductors 906. Conductive layer 908a may be deposited onto non-conductive polymeric layer 908b using any suitable method.

Referring to Fig. 7c, shielded electrical cable 1002 includes a single conductor set 1004. Conductor set 1004 includes two substantially parallel longitudinal insulated conductors 1006. Two generally parallel shielding films 1008 are disposed around conductor set 1004. Shielding films 1008 include a conformable adhesive layer 1010 that bonds shielding films 1008 to each other on both sides of conductor set 1004. Insulated conductors 1006 are arranged generally in a single plane and effectively in a twinaxial or differential pair cable arrangement. Shielding films 1008 include a stand-alone conductive film.

Referring to Fig. 7d, shielded electrical cable 1102 includes a single conductor set 1104. Conductor set 1104 includes two substantially parallel longitudinal insulated conductors 1106. Two generally parallel shielding films 1108 are disposed around conductor set 1104. Shielding films 1108 include a conformable adhesive layer 1110 that bonds shielding films 1108 to each other on both sides of conductor set 1104. Insulated conductors 1106 are arranged generally in a single plane and effectively in a twinaxial or differential pair cable arrangement. Shielding films 1108 include a conductive layer 1108a, a non-conductive polymeric layer 1108b, and a laminating adhesive layer 1108c disposed between conductive layer 1108a and non-conductive polymeric layer 1108b, thereby laminating conductive layer 1108a to non-conductive polymeric layer 1108b. Conductive layer 1108a faces insulated conductors 1106.

Referring back to Fig. 1, conformable adhesive layer 10 of shielded electrical cable 2 is disposed between shielding films 8 and bonds shielding films 8 to each other on both sides of each conductor set 4. In one embodiment, conformable adhesive layer 10 may be disposed on one of shielding films 8. In another embodiment, conformable adhesive layer 10 may be disposed on both shielding films 8. Conformable adhesive layer 10 may include an insulative adhesive and provide an insulative bond between shielding films 8.

Optionally, conformable adhesive layer 10 may provide an insulative bond between at least one of shielding films 8 and insulated conductors 6, and between at least one of shielding films 8 and ground conductors 12. Conformable adhesive layer 10 may include a conductive adhesive and provide a conductive bond between shielding films 8. Optionally, conformable adhesive layer 10 may provide a conductive bond between at least one of shielding films 8 and ground conductors 12. Suitable conductive adhesives include conductive particles to provide the flow of electrical current. The conductive particles can be any of the types of particles currently used, such as spheres, flakes, rods, cubes, amorphous, or other particle shapes. They may be solid or substantially solid particles such as carbon black, carbon fibers, nickel spheres, nickel coated copper spheres, metal-coated oxides, metal-coated polymer fibers, or other similar conductive particles. These conductive particles can be made from electrically insulating materials that are plated or coated with a conductive material such as silver, aluminum, nickel, or indium tin-oxide. The metal-coated insulating material can be substantially hollow particles such as hollow glass spheres, or may comprise solid materials such as glass beads or metal oxides. The conductive particles may be on the order of several tens of microns to nanometer sized materials such as carbon nanotubes. Suitable conductive adhesives may also include a conductive polymeric matrix. In one aspect, conformable adhesive layer 10 may include a continuous adhesive layer extending along the entire length and width of shielding films 8. In another aspect, conformable adhesive layer 10 may include a discontinuous adhesive layer. For example, conformable adhesive layer 10 may be present only in some portions along the length or width of shielding films 8. In one embodiment, discontinuous adhesive layer 10 includes a plurality of longitudinal adhesive stripes that are disposed, e.g., on both sides of each conductor set 4 and ground conductors 12. In one embodiment, conformable adhesive layer 10 includes at least one of a pressure sensitive adhesive, a hot melt adhesive, a thermoset adhesive, and a curable adhesive. In one embodiment, conformable adhesive layer 10 is configured to provide a bond between shielding films 8 that is substantially stronger than a bond between one or more insulated conductor 6 and shielding films 8. This may be achieved, e.g., by selecting the adhesive formulation accordingly. An advantage of this adhesive configuration is that shielding films 8 are readily strippable from the insulation of insulated conductors 6. In another embodiment, conformable adhesive layer 10 is configured to provide a bond between shielding films 8

and a bond between one or more insulated conductor 6 and shielding films 8 that are substantially equally strong. An advantage of this adhesive configuration is that insulated conductors 6 are anchored between shielding films 8. On bending shielded electrical cable 2, this allows for little relative movement and therefore reduces the likelihood of buckling of shielding films 8. Suitable bond strengths may be chosen based on the intended application. In one embodiment, conformable adhesive layer 10 has a thickness of less than about 0.13 mm. In a preferred embodiment, conformable adhesive layer 10 has a thickness of less than about 0.05 mm.

Conformable adhesive layer 10 may conform to achieve desired mechanical and electrical performance characteristics of shielded electrical cable 2. In one aspect, conformable adhesive layer 10 may conform to be thinner between shielding films 8 in areas between conductor sets 4, which increases at least the lateral flexibility of shielded electrical cable 2. This allows shielded electrical cable 2 to be placed more easily into a curvilinear outer jacket, e.g. In another aspect, conformable adhesive layer 10 may conform to be thicker in areas immediately adjacent conductor sets 4 and substantially conform to conductor sets 4. This increases the mechanical strength and enables forming a curvilinear shape of shielding films 8 in these areas, which increases the durability of shielded electrical cable 2, e.g., during flexing of the cable. In addition, this helps to maintain the position and spacing of insulated conductors 6 relative to shielding films 8 along the length of shielded electrical cable 2, which results in uniform impedance and superior signal integrity of shielded electrical cable 2. In another aspect, conformable adhesive layer 10 may conform to effectively be partially of completely removed between shielding films 8 in areas between conductor sets 4. As a result, shielding films 8 electrically contact each other in these areas, which increases the electrical performance of shielded electrical cable 2. In another aspect, conformable adhesive layer 10 may conform to effectively be partially of completely removed between at least one of shielding films 8 and ground conductors 12. As a result, ground conductors 12 electrically contact at least one of shielding films 8 in these areas, which increases the electrical performance of shielded electrical cable 2. Even if a thin conformable adhesive layer 10 exists between at least one of shielding films 8 and ground conductors 12, asperities on ground conductors 12 may break through conformable adhesive layer 10 to establish electrical contact as intended.

Figs. 8a-8c illustrate three other exemplary embodiments of a shielded electrical cable according to aspects of the present invention. Figs. 8a-8c are specifically intended to illustrate examples of the placement of ground conductors in the shielded electrical cables. An aspect of a shielded electrical cable is proper grounding of the shield. Shielded electrical cables according to aspects of the present invention can be grounded in a number of ways. In one aspect, the ground conductors electrically contact at least one of the shielding films such that grounding the ground conductors also grounds the shielding films. In this arrangement, the ground conductors may also be referred to as "drain wires". In another aspect, the ground conductors do not electrically contact the shielding films, but are individual elements in the cable construction that may be independently terminated to any suitable individual contact element of any suitable termination point, such as, e.g., a contact element on a printed circuit board. In this arrangement, the ground conductors may also be referred to as "ground wires". Fig. 8a illustrates an exemplary embodiment of a shielded electrical cable according to an aspect of the present invention wherein the ground conductors are positioned external to the shielding films. Figs. 8b-8c illustrate two exemplary embodiments of a shielded electrical cable according to aspects of the present invention wherein the ground conductors are positioned between the shielding films, and may be included in the conductor set. One or more ground conductors may be placed in any suitable position external to the shielding films, between the shielding films, or a combination of both.

Referring to Fig. 8a, shielded electrical cable 1202 includes a single conductor set 1204. Conductor set 1204 includes two substantially parallel longitudinal insulated conductors 1206. Two generally parallel shielding films 1208 are disposed around conductor set 1204. A conformable adhesive layer 1210 is disposed between shielding films 1208 and bonds shielding films 1208 to each other on both sides of conductor set 1204. Insulated conductors 1206 are arranged generally in a single plane and effectively in a twinaxial or differential pair cable arrangement. Shielded electrical cable 1202 further includes a plurality of ground conductors 1212 positioned external to shielding films 1208. Ground conductors 1212 are placed over, under, and on both sides of conductor set 1204. Optionally, shielded electrical cable 1202 includes protective films 1220 surrounding shielding films 1208 and ground conductors 1212. Protective films 1220 include a protective layer 1220a and an adhesive layer 1220b bonding protective layer 1220a to

shielding films 1208 and ground conductors 1212. Alternatively, shielding films 1208 and ground conductors 1212 may be surrounded by an outer conductive shield, such as, e.g., a conductive braid, and an outer insulative jacket (not shown).

Referring to Fig. 8b, shielded electrical cable 1302 includes a single conductor set 1304. Conductor set 1304 includes two substantially parallel longitudinal insulated conductors 1306. Two generally parallel shielding films 1308 are disposed around conductor set 1304. A conformable adhesive layer 1310 is disposed between shielding films 1308 and bonds shielding films 1308 to each other on both sides of conductor set 1304. Insulated conductors 1306 are arranged generally in a single plane and effectively in a twinaxial or differential pair cable arrangement. Shielded electrical cable 1302 further includes a plurality of ground conductors 1312 positioned between shielding films 1308. Two of the ground conductors 1312 are included in conductor set 1304, and two of the ground conductors 1312 are spaced apart from conductor set 1304.

Referring to Fig. 8c, shielded electrical cable 1402 includes a single conductor set 1404. Conductor set 1404 includes two substantially parallel longitudinal insulated conductors 1406. Two generally parallel shielding films 1408 are disposed around conductor set 1404. A conformable adhesive layer 1410 is disposed between shielding films 1408 and bonds shielding films 1408 to each other on both sides of conductor set 1404. Insulated conductors 1406 are arranged generally in a single plane and effectively in a twinaxial or differential pair cable arrangement. Shielded electrical cable 1402 further includes a plurality of ground conductors 1412 positioned between shielding films 1408. All of the ground conductors 1412 are included in conductor set 1404. Two of the ground conductors 1412 and insulated conductors 1406 are arranged generally in a single plane.

Figs. 9a-9b illustrate an exemplary embodiment of an electrical assembly according to an aspect of the present invention terminated to a printed circuit board. Electrical assembly 1500 includes a shielded electrical cable 1502 and an electrically conductive cable clip 1522. Shielded electrical cable 1502 includes a plurality of spaced apart conductor sets 1504 arranged generally in a single plane. Each conductor set includes two substantially parallel longitudinal insulated conductors 1506. Two generally parallel shielding films 1508 are disposed around conductor sets 1504. A conformable adhesive layer 1510 is disposed between shielding films 1508 and bonds shielding films 1508 to each other on both sides of each conductor set 1504. Cable clip 1522 is clamped

or otherwise attached to an end portion of shielded electrical cable 1502 such that at least one of shielding films 1508 electrically contacts cable clip 1522. Cable clip 1522 is configured for termination to a ground reference, such as, e.g., contact element 1516 on printed circuit board 1514, to establish a ground connection between shielded electrical cable 1502 and the ground reference. Cable clip may be terminated to the ground reference using any suitable method, including soldering, welding, crimping, mechanical clamping, and adhesively bonding, to name a few. When terminated, cable clip 1522 may facilitate termination of the end portions of the conductors of insulated conductors 1506 of shielded electrical cable 1502 to contact elements of a termination point, such as, e.g., contact elements 16 on printed circuit board 14. Shielded electrical cable 1502 may include one or more ground conductors as described herein that may electrically contact cable clip 1522 in addition to or instead of at least one of shielding films 1508.

Figs. 10a-10g illustrate an exemplary method of making a shielded electrical cable according to an aspect of the present invention. Specifically, Figs. 10a-10g illustrate an exemplary method of making shielded electrical cable 2 illustrated in Fig. 1.

In the step illustrated in Fig. 10a, insulated conductors 6 are formed using any suitable method, such as, e.g., extrusion. Insulated conductors 6 may be formed of any suitable length. Insulated conductors 6 may then be provided as such or cut to a desired length. Ground conductors 12 may be formed and provided in a similar fashion (not shown). In the step illustrated in Fig. 10b, shielding films 8 are formed. A single layer or multilayer web may be formed using any suitable method, such as, e.g., continuous wide web processing. Shielding films 8 may be formed of any suitable length. Shielding films 8 may then be provided as such or cut to a desired length and/or width. Shielding films 8 may be pre-formed to have transverse partial folds to increase flexibility in the longitudinal direction. As illustrated in Fig. 10b, shielding films 8 include conformable adhesive layer 10, which may be formed on shielding films 8 using any suitable method, such as, e.g., laminating or sputtering. In the step illustrated in Fig. 10c, a plurality of insulated conductors 6, ground conductors 12, and shielding films 8 are provided. A forming tool 24 is provided. Forming tool 24 includes a pair of forming rolls 26a, 26b having a shape corresponding to a cross-sectional shape of shielded electrical cable 2 and include a bite 28. Insulated conductors 6, ground conductors 12, and shielding films 8 are arranged according to the configuration of shielded electrical cable 2, and positioned in

proximity to forming rolls 26a, 26b, after which they are concurrently fed into bite 28 of forming rolls 26a, 26b and disposed between forming rolls 26a, 26b. Forming tool 24 forms shielding films 8 around conductor sets 4 and ground conductor 12 and bonds shielding films 8 to each other on both sides of each conductor set 4 and ground conductors 12. Heat may be applied to facilitate bonding. Although in this embodiment, forming shielding films 8 around conductor sets 4 and ground conductor 12 and bonding shielding films 8 to each other on both sides of each conductor set 4 and ground conductors 12 occur in a single operation, in other embodiments, these steps may occur in separate operations. Fig. 10d illustrates shielded electrical cable 2 as it is formed by forming tool 24. In the step illustrated in Fig. 10e, longitudinal splits 18 are formed between conductor sets 4. Splits 18 may be formed in shielded electrical cable 2 using any suitable method, such as, e.g., laser cutting or punching. In the step illustrated in Fig. 10f, shielding films 8 of shielded electrical cable 2 are folded and an outer conductive shield 30 is provided around the folded shielding films 8 using any suitable method. In the step illustrated in Fig. 10g, an outer jacket 32 is provided around outer conductive shield 30 using any suitable method, such as, e.g., extrusion. In other embodiments, outer conductive shield 30 may be omitted and outer jacket 32 may be provided around the folded shielding films 8.

Figs. 11a-11c illustrate a detail of an exemplary method of making a shielded electrical cable according to an aspect of the present invention. Figs. 11a-11c are specifically intended to illustrate an example of the conforming of conformable adhesive layers during the forming and bonding of shielding films.

In the step illustrated in Fig. 11a, an insulated conductor 1606, a ground conductor 1612 spaced apart from insulated conductor 1606, and two shielding films 1608 are provided. Shielding films 1608 each include a conformable adhesive layer 1610. In the steps illustrated in Figs. 11b-11c, shielding films 1608 are formed around insulated conductor 1606 and ground conductor 1612 and bonded to each other. Initially, as illustrated in Fig. 11b, conformable adhesive layers 1610 still have their original thickness. As the forming and bonding of shielding films 1608 proceeds, conformable adhesive layers 1610 conform to achieve desired mechanical and electrical performance characteristics of shielded electrical cable 1602. Specifically, as illustrated in Fig. 11c, conformable adhesive layers 1610 conform to be thinner between shielding films 1608 on

both sides of insulated conductor 1606 and ground conductor 1612; a portion of conformable adhesive layers 1610 displaces away from these areas. Further, conformable adhesive layers 1610 conform to be thicker in areas immediately adjacent insulated conductor 1606 and ground conductor 1612, and substantially conform to insulated conductor 1606 and ground conductor 1612; a portion of conformable adhesive layers 1610 displaces into these areas. Further, conformable adhesive layers 1610 conform to effectively be removed between shielding films 1608 and ground conductor 1612; conformable adhesive layers 1610 displace away from these areas such that ground conductor 1612 electrically contacts shielding films 1608.

The following items are exemplary embodiments of a shielded electrical cable, a method of making a shielded electrical cable, or an electrical assembly according to aspects of the present invention.

Item 1 is a shielded electrical cable comprising a conductor set including one or more substantially parallel longitudinal insulated conductors; two generally parallel shielding films disposed around the conductor set; and a conformable adhesive layer disposed between the shielding films and bonding the shielding films to each other on both sides of the conductor set.

Item 2 is the shielded electrical cable of item 1 further comprising at least one longitudinal ground conductor extending in substantially the same direction as the one or more insulated conductors.

Item 3 is the shielded electrical cable of item 2, wherein the ground conductor electrically contacts at least one of the shielding films.

Item 4 is the shielded electrical cable of item 2, wherein the ground conductor is included in the conductor set.

Item 5 is the shielded electrical cable of item 2, wherein the ground conductor is positioned external to the shielding films.

Item 6 is the shielded electrical cable of item 1, wherein the conductor set further includes a conductive shield disposed around the one or more insulated conductors, and an insulative jacket disposed around the conductive shield.

Item 7 is the shielded electrical cable of item 1, wherein the conductor set includes two insulated conductors.

Item 8 is the shielded electrical cable of item 1, wherein the one or more insulated conductors are arranged generally in a single plane.

Item 9 is the shielded electrical cable of item 1, wherein at least one of the shielding films includes a conductive layer and a non-conductive polymeric layer.

Item 10 is the shielded electrical cable of item 9, wherein the conductive layer faces the one or more insulated conductors.

Item 11 is the shielded electrical cable of item 9, wherein the non-conductive polymeric layer faces the one or more insulated conductors.

Item 12 is the shielded electrical cable of item 9, wherein at least one of the shielding films includes a laminating adhesive layer disposed between the conductive layer and the non-conductive polymeric layer.

Item 13 is the shielded electrical cable of item 1, wherein the shielding films have a thickness in the range of 0.01 mm to 0.05 mm.

Item 14 is the shielded electrical cable of item 1, wherein the conductor set has a substantially curvilinear cross-sectional shape, and wherein the shielding films are disposed around the conductor set such as to substantially conform to and maintain the cross-sectional shape.

Item 15 is the shielded electrical cable of item 1, wherein the shielding films electrically contact each other.

Item 16 is the shielded electrical cable of item 1, wherein at least one of the shielding films includes the conformable adhesive layer.

Item 17 is the shielded electrical cable of item 1, wherein the conformable adhesive layer has a thickness of less than about 0.13 mm.

Item 18 is the shielded electrical cable of item 1, wherein the conformable adhesive layer has a thickness of less than about 0.05 mm.

Item 19 is the shielded electrical cable of item 1, wherein the conformable adhesive layer is configured to provide a bond between the shielding films that is substantially stronger than a bond between the one or more insulated conductors and the shielding films.

Item 20 is the shielded electrical cable of item 1, wherein the conformable adhesive layer is configured to provide a bond between the shielding films and a bond

between the one or more insulated conductors and the shielding films that are substantially equally strong.

Item 21 is the shielded electrical cable of item 1, wherein the conformable adhesive layer comprises at least one of a pressure sensitive adhesive, a hot melt adhesive, a thermoset adhesive, and a curable adhesive.

Item 22 is the shielded electrical cable of item 1, wherein the conformable adhesive layer comprises a conductive adhesive.

Item 23 is the shielded electrical cable of item 1, wherein the conformable adhesive layer includes a discontinuous adhesive layer.

Item 24 is the shielded electrical cable of item 23, wherein the discontinuous adhesive layer includes a plurality of longitudinal adhesive stripes.

Item 25 is the shielded electrical cable of item 1, wherein the conformable adhesive layer includes a continuous adhesive layer.

Item 26 is the shielded electrical cable of item 1, wherein the conformable adhesive layer substantially conforms to the conductor set.

Item 27 is the shielded electrical cable of item 1, wherein the shielding films includes an integrally formed shielding film.

Item 28 is a shielded electrical cable comprising a plurality of spaced apart conductor sets arranged generally in a single plane, each conductor set including one or more substantially parallel longitudinal insulated conductors; two generally parallel shielding films disposed around the conductor sets; and a conformable adhesive layer disposed between the shielding films and bonding the shielding films to each other on both sides of each conductor set.

Item 29 is the shielded electrical cable of item 28, wherein the shielding films include a plurality of longitudinal splits disposed between the conductor sets.

Item 30 is the shielded electrical cable of item 28, wherein the one or more insulated conductors are arranged generally in a single plane.

Item 31 is a shielded electrical cable comprising a conductor set including one or more substantially parallel longitudinal insulated conductors; at least one longitudinal ground conductor spaced apart from and extending in substantially the same direction as the one or more insulated conductors, wherein the conductor set and the ground conductor are arranged generally in a single plane; two generally parallel shielding films disposed

around the conductor set and the ground conductor; and a conformable adhesive layer disposed between the shielding films and bonding the shielding films to each other on both sides of the conductor set and the ground conductor.

Item 32 is the shielded electrical cable of item 31, wherein the ground conductor electrically contacts at least one of the shielding films.

Item 33 is the shielded electrical cable of item 31, wherein the one or more insulated conductors are arranged generally in a single plane.

Item 34 is a method of making a shielded electrical cable comprising providing a conductor set including one or more substantially parallel longitudinal insulated conductors; forming two generally parallel shielding films around the conductor set; and bonding the shielding films to each other on both sides of the conductor set with a conformable adhesive layer.

Item 35 is the method of item 34, wherein forming two generally parallel shielding films around the conductor set includes disposing the shielding films and one or more insulated conductors between a pair of forming rolls having a shape corresponding to a cross-sectional shape of the shielded electrical cable.

Item 36 is the method of item 34, wherein forming two generally parallel shielding films around the conductor set and bonding the shielding films to each other on both sides of the conductor set occur in a single operation.

Item 37 is the method of item 34, wherein at least one of the shielding films includes a conductive layer and a non-conductive polymeric layer, and wherein the conductive layer is deposited onto the non-conductive polymeric layer.

Item 38 is the method of item 34, wherein at least one of the shielding films includes a conductive layer and a non-conductive polymeric layer, and wherein the conductive layer is laminated to the non-conductive polymeric layer.

Item 39 is the method of item 34, wherein bonding the shielding films to each other on both sides of the conductor set includes conforming the conformable adhesive layer substantially to the conductor set.

Item 40 is a method of making a shielded electrical cable comprising providing a plurality of spaced apart conductor sets arranged generally in a single plane, each conductor set including one or more substantially parallel longitudinal insulated conductors; forming two generally parallel shielding films around the conductor sets; and

bonding the shielding films to each other on both sides of each conductor set with a conformable adhesive layer.

Item 41 is the method of item 40 further comprising folding the shielding films.

Item 42 is the method of item 41 further comprising forming a plurality of longitudinal splits between the conductor sets.

Item 43 is the method of item 41 further comprising forming an outer conductive shield around the folded shielding films.

Item 44 is the method of item 41 further comprising forming an outer jacket around the folded shielding films.

Item 45 is a method of making a shielded electrical cable comprising providing a conductor set including one or more substantially parallel longitudinal insulated conductors; providing at least one longitudinal ground conductor spaced apart from and extending in substantially the same direction as the one or more insulated conductors, wherein the conductor set and the ground conductor are arranged generally in a single plane; forming two generally parallel shielding films around the conductor set and the ground conductor; and bonding the shielding films to each other on both sides of the conductor set and the ground conductor with a conformable adhesive layer.

Item 46 is the method of item 45, wherein bonding the shielding films to each other on both sides of the conductor set and the ground conductor includes displacing the conformable adhesive layer away from the ground conductor such that the ground conductor electrically contacts at least one of the shielding films.

Item 47 is an electrical assembly comprising a shielded electrical cable comprising a conductor set including one or more substantially parallel longitudinal insulated conductors; two generally parallel shielding films disposed around the conductor set; and a conformable adhesive layer disposed between the shielding films and bonding the shielding films to each other on both sides of the conductor set; and an electrically conductive cable clip configured for termination to a ground reference, wherein at least one of the shielding films electrically contacts the cable clip.

Although specific embodiments have been illustrated and described herein for purposes of description of the preferred embodiment, it will be appreciated by those of ordinary skill in the art that a wide variety of alternate and/or equivalent implementations

calculated to achieve the same purposes may be substituted for the specific embodiments shown and described without departing from the scope of the present invention. Those with skill in the mechanical, electro-mechanical, and electrical arts will readily appreciate that the present invention may be implemented in a very wide variety of embodiments. This application is intended to cover any adaptations or variations of the preferred embodiments discussed herein. Therefore, it is manifestly intended that this invention be limited only by the claims and the equivalents thereof.

What is claimed is:

1. A shielded electrical cable comprising:
a conductor set including one or more substantially parallel longitudinal insulated conductors;
two generally parallel shielding films disposed around the conductor set; and
a conformable adhesive layer disposed between the shielding films and bonding the shielding films to each other on both sides of the conductor set.

2. The shielded electrical cable of claim 1 further comprising at least one longitudinal ground conductor extending in substantially the same direction as the one or more insulated conductors.

3. The shielded electrical cable of claim 1, wherein the conductor set has a substantially curvilinear cross-sectional shape, and wherein the shielding films are disposed around the conductor set such as to substantially conform to and maintain the cross-sectional shape.

4. The shielded electrical cable of claim 1, wherein the conformable adhesive layer substantially conforms to the conductor set.

5. A shielded electrical cable comprising:
a plurality of spaced apart conductor sets arranged generally in a single plane, each conductor set including one or more substantially parallel longitudinal insulated conductors;
two generally parallel shielding films disposed around the conductor sets; and
a conformable adhesive layer disposed between the shielding films and bonding the shielding films to each other on both sides of each conductor set.

6. A shielded electrical cable comprising:
a conductor set including one or more substantially parallel longitudinal insulated conductors;
at least one longitudinal ground conductor spaced apart from and extending in substantially the same direction as the one or more insulated conductors,

wherein the conductor set and the ground conductor are arranged generally in a single plane;

two generally parallel shielding films disposed around the conductor set and the ground conductor; and

a conformable adhesive layer disposed between the shielding films and bonding the shielding films to each other on both sides of the conductor set and the ground conductor.

7. A method of making a shielded electrical cable comprising:

providing a conductor set including one or more substantially parallel longitudinal insulated conductors;

forming two generally parallel shielding films around the conductor set; and

bonding the shielding films to each other on both sides of the conductor set with a conformable adhesive layer.

8. A method of making a shielded electrical cable comprising:

providing a plurality of spaced apart conductor sets arranged generally in a single plane, each conductor set including one or more substantially parallel longitudinal insulated conductors;

forming two generally parallel shielding films around the conductor sets; and

bonding the shielding films to each other on both sides of each conductor set with a conformable adhesive layer.

9. A method of making a shielded electrical cable comprising:

providing a conductor set including one or more substantially parallel longitudinal insulated conductors;

providing at least one longitudinal ground conductor spaced apart from and extending in substantially the same direction as the one or more insulated conductors, wherein the conductor set and the ground conductor are arranged generally in a single plane;

forming two generally parallel shielding films around the conductor set and the ground conductor; and

bonding the shielding films to each other on both sides of the conductor set and the ground conductor with a conformable adhesive layer.

10. An electrical assembly comprising:

a shielded electrical cable comprising:

a conductor set including one or more substantially parallel longitudinal insulated conductors;

two generally parallel shielding films disposed around the conductor set; and

a conformable adhesive layer disposed between the shielding films and bonding the shielding films to each other on both sides of the conductor set; and

an electrically conductive cable clip configured for termination to a ground reference,

wherein at least one of the shielding films electrically contacts the cable clip.

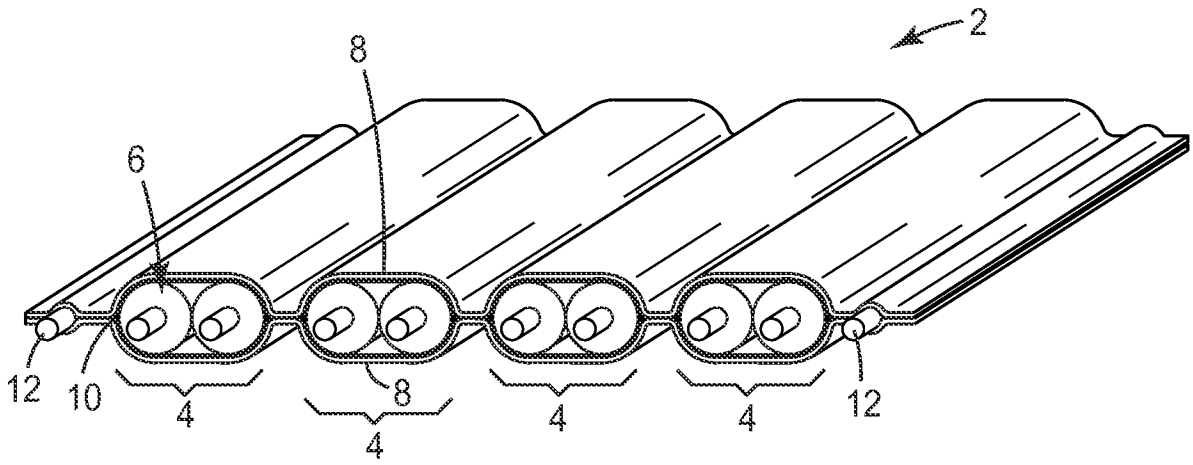

FIG. 1

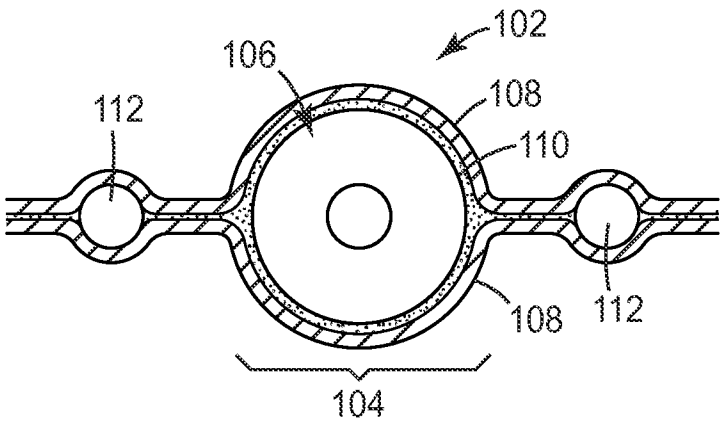

FIG. 2a

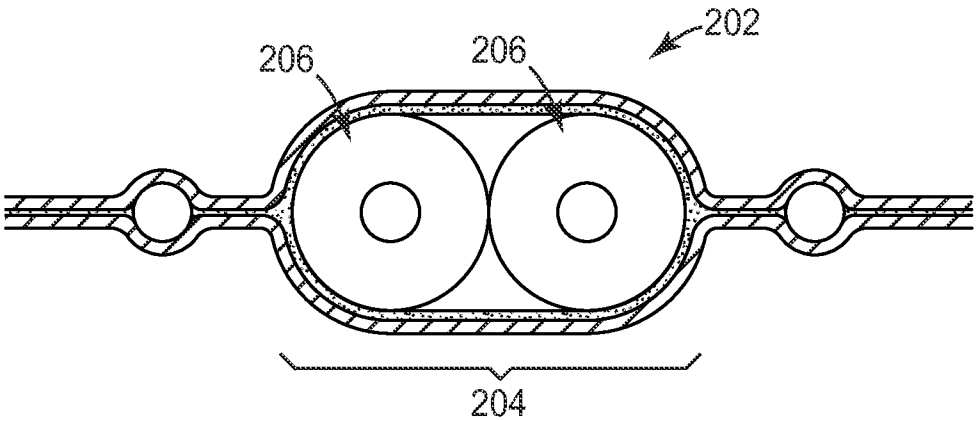

FIG. 2b

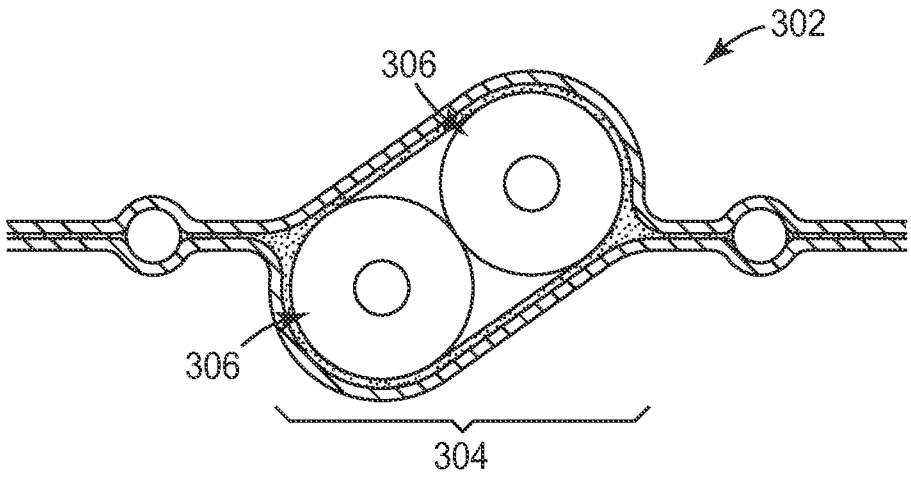

FIG. 2c

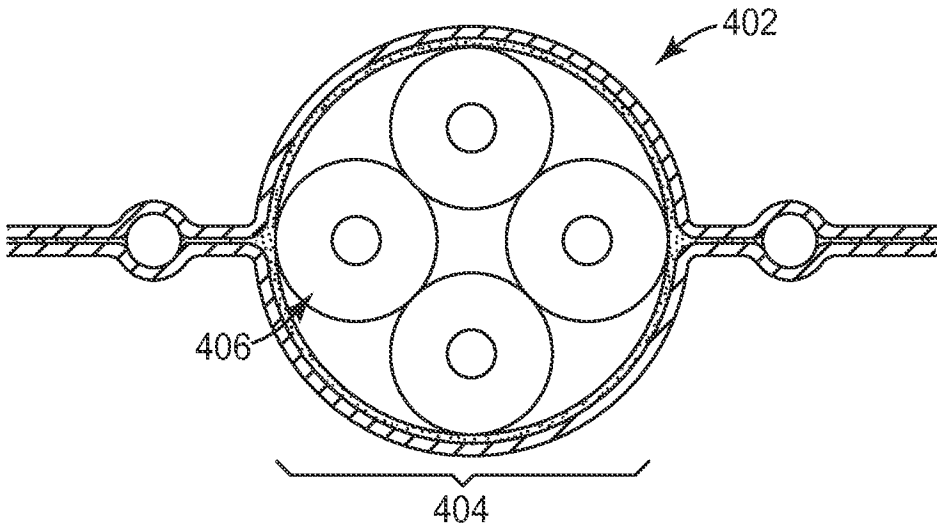

FIG. 2d

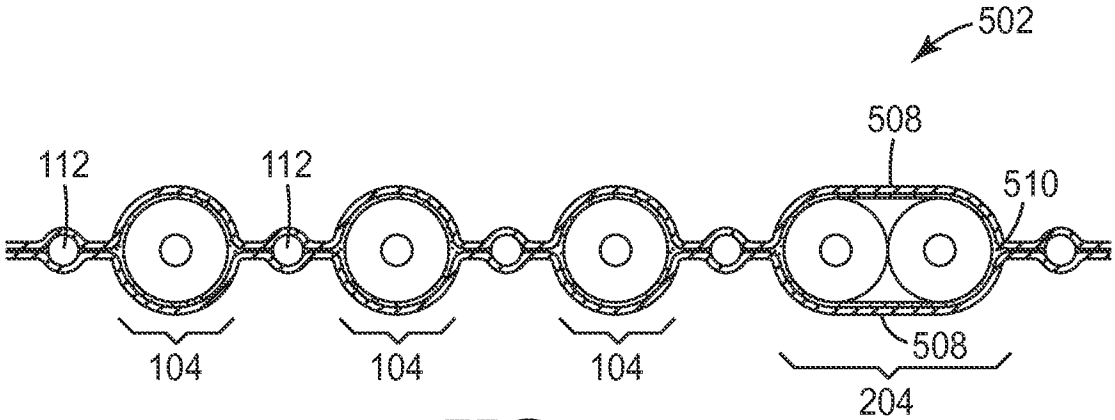

FIG. 2e

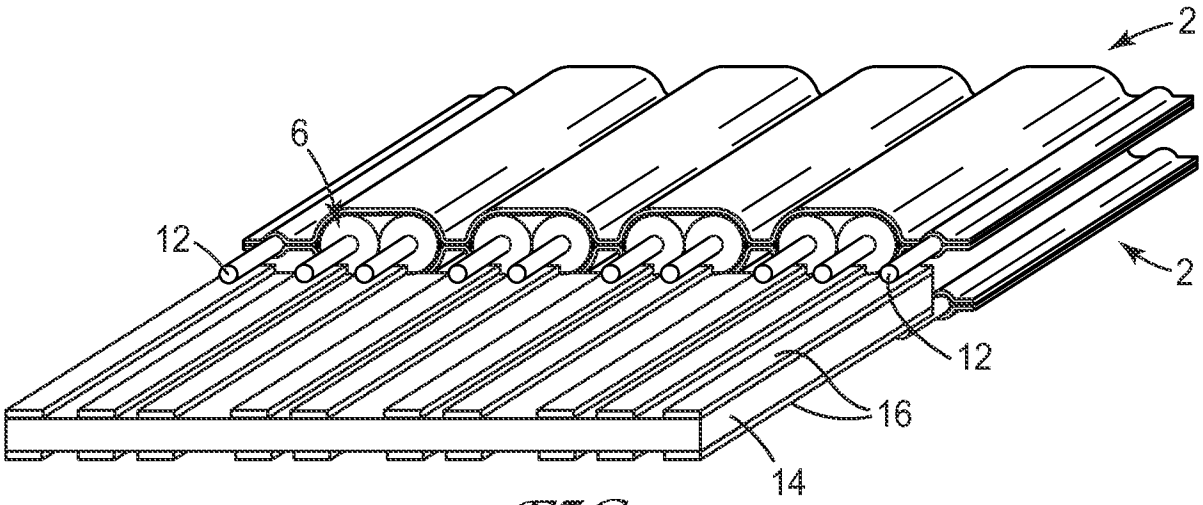

FIG. 3

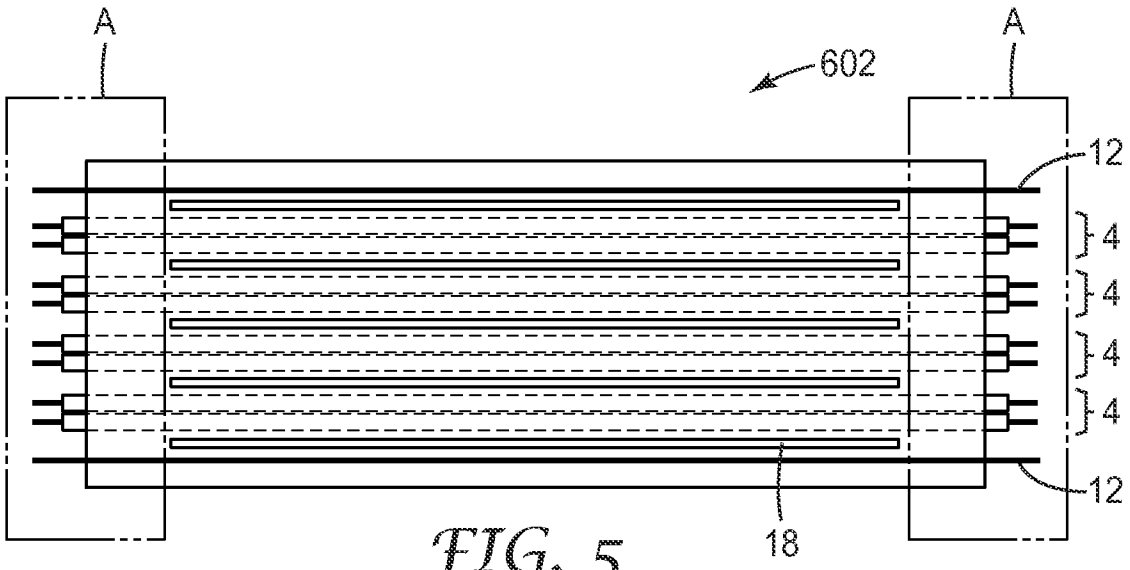

FIG. 5

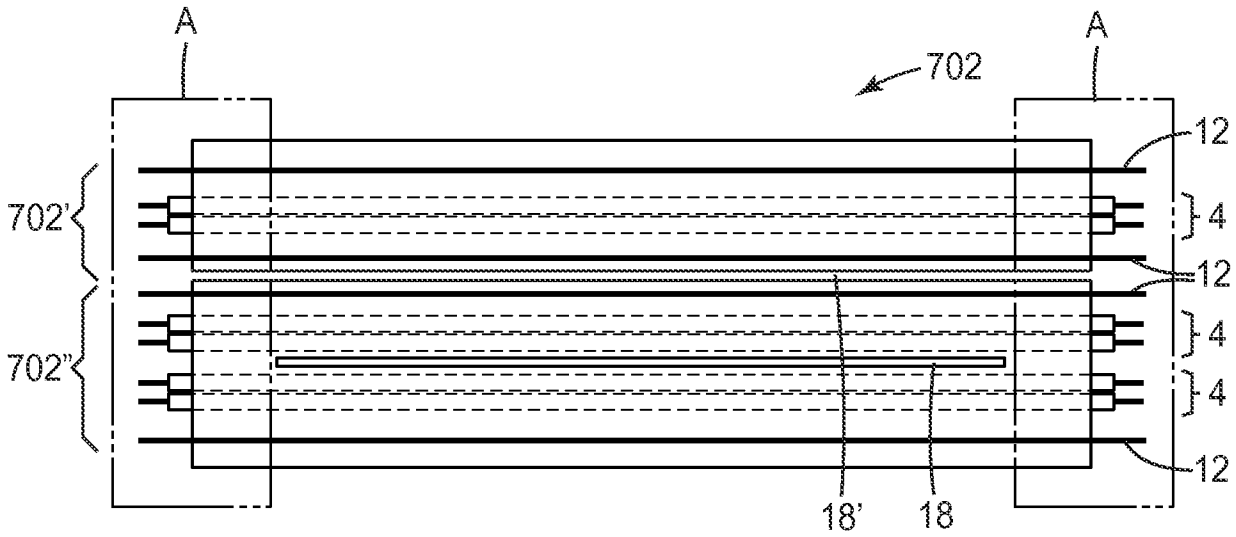

FIG. 6

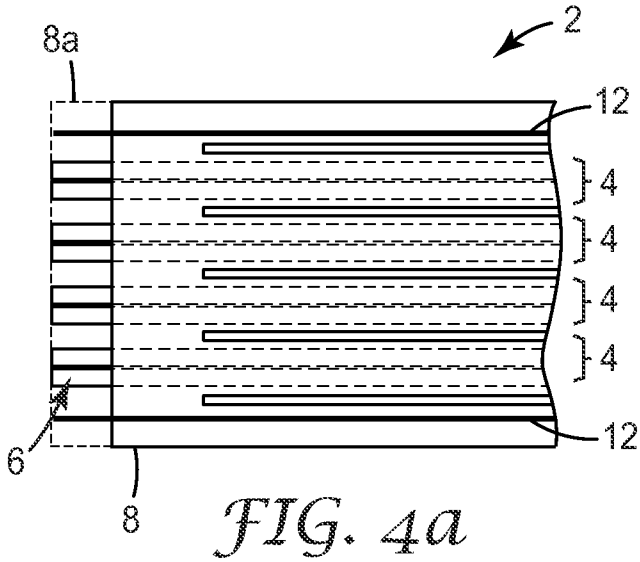

FIG. 4a

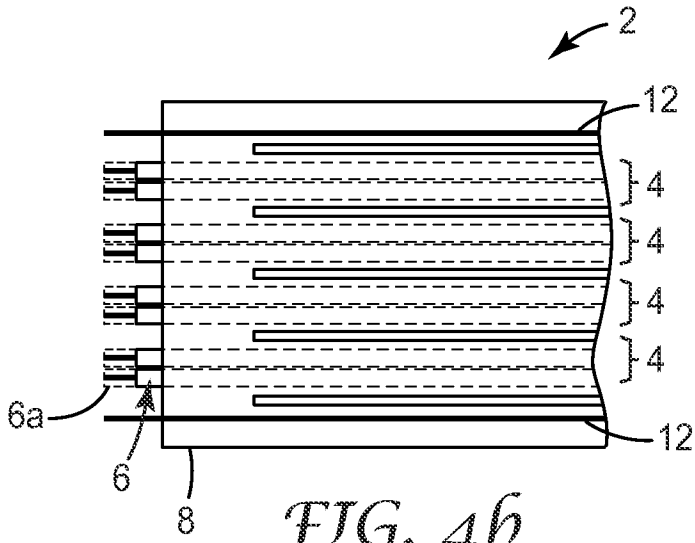

FIG. 4b

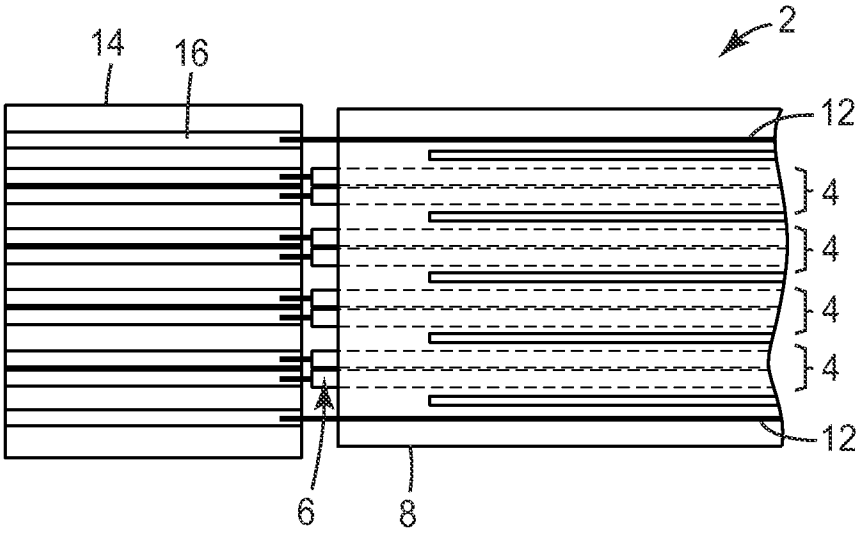

FIG. 4c

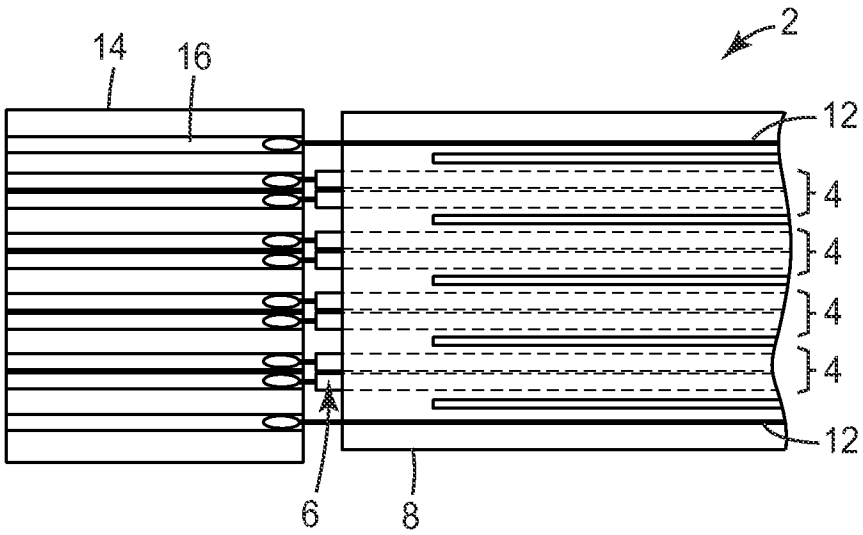

FIG. 4d

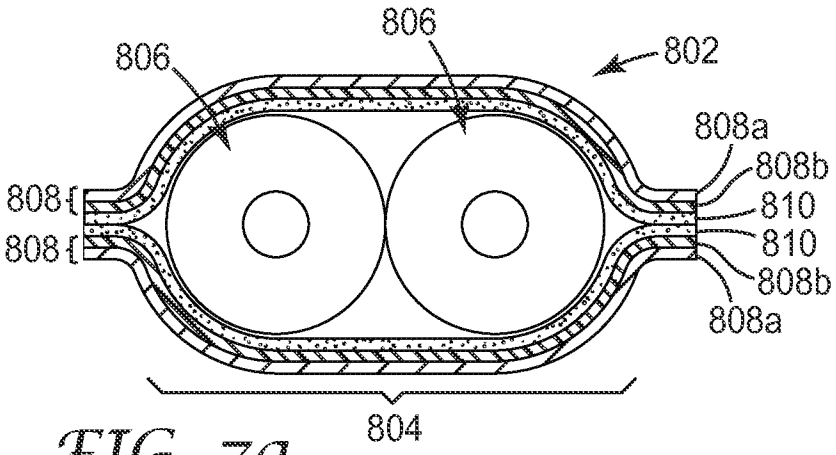

FIG. 7a

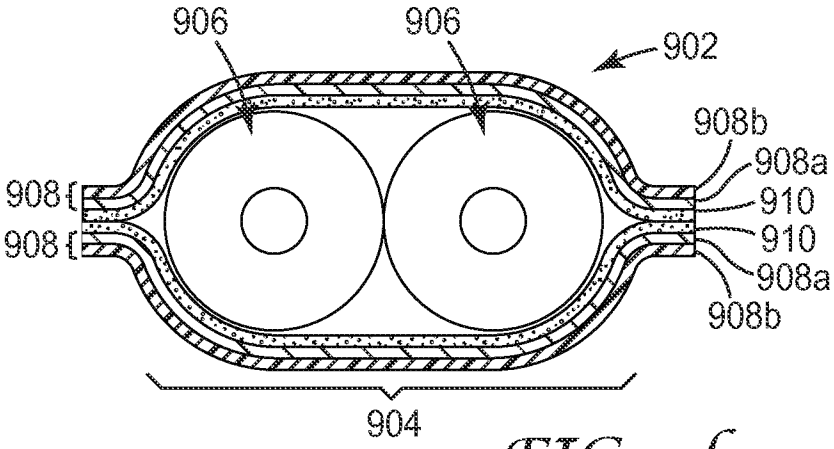

FIG. 7b

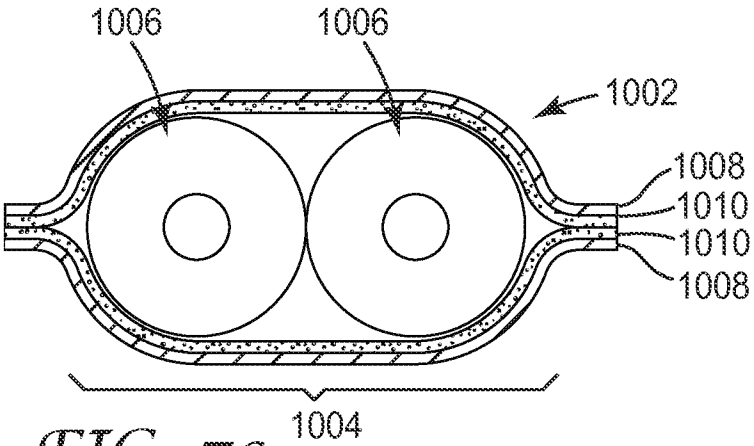

FIG. 7c

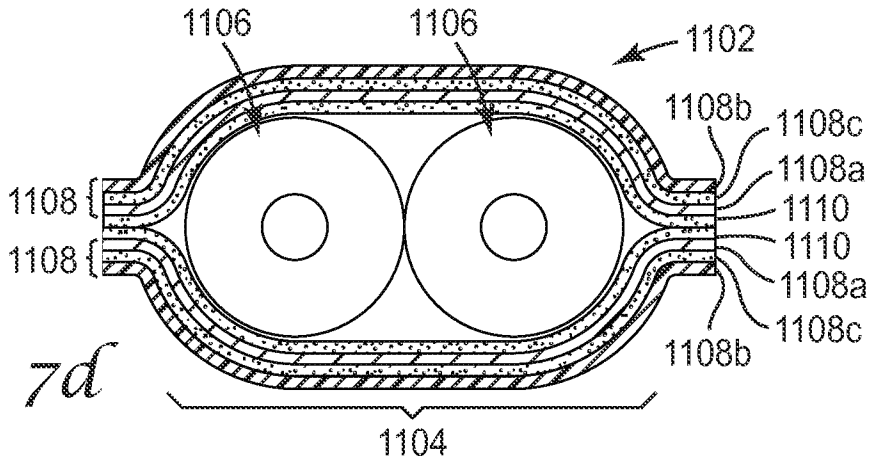

FIG. 7d

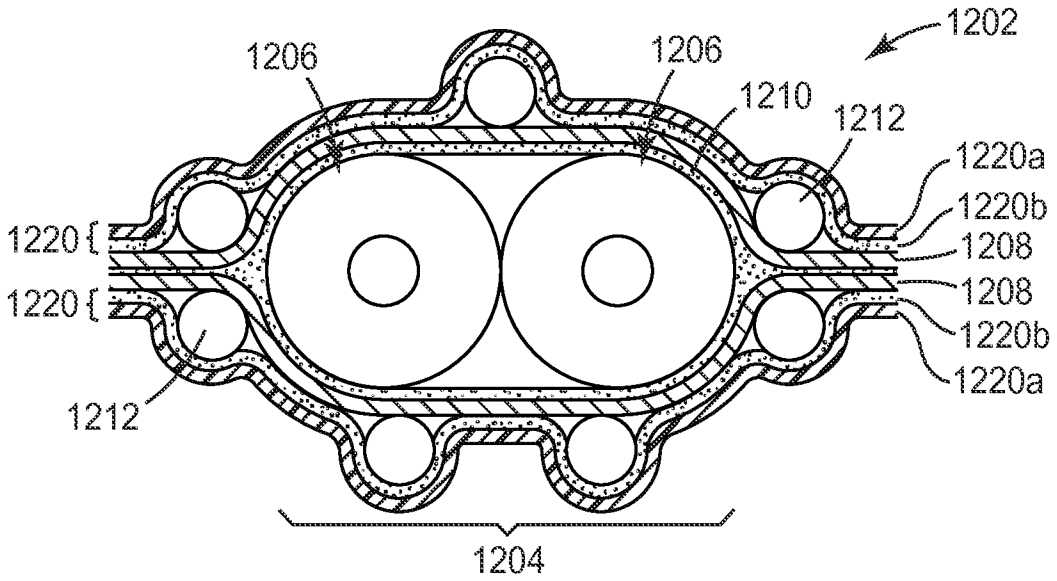

FIG. 8A

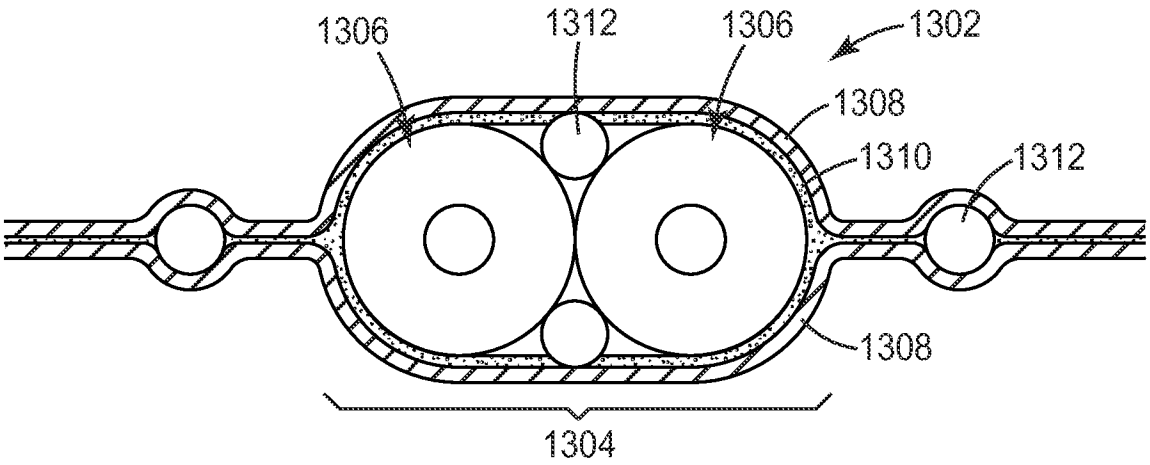

FIG. 8b

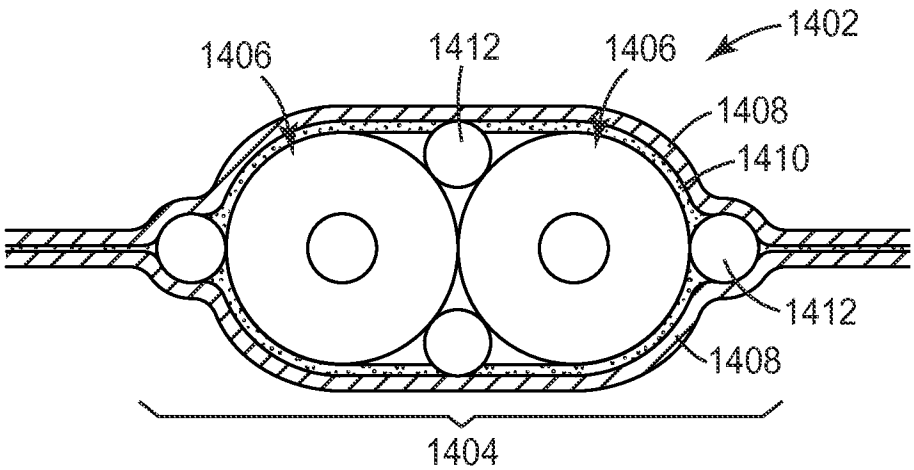

FIG. 8c

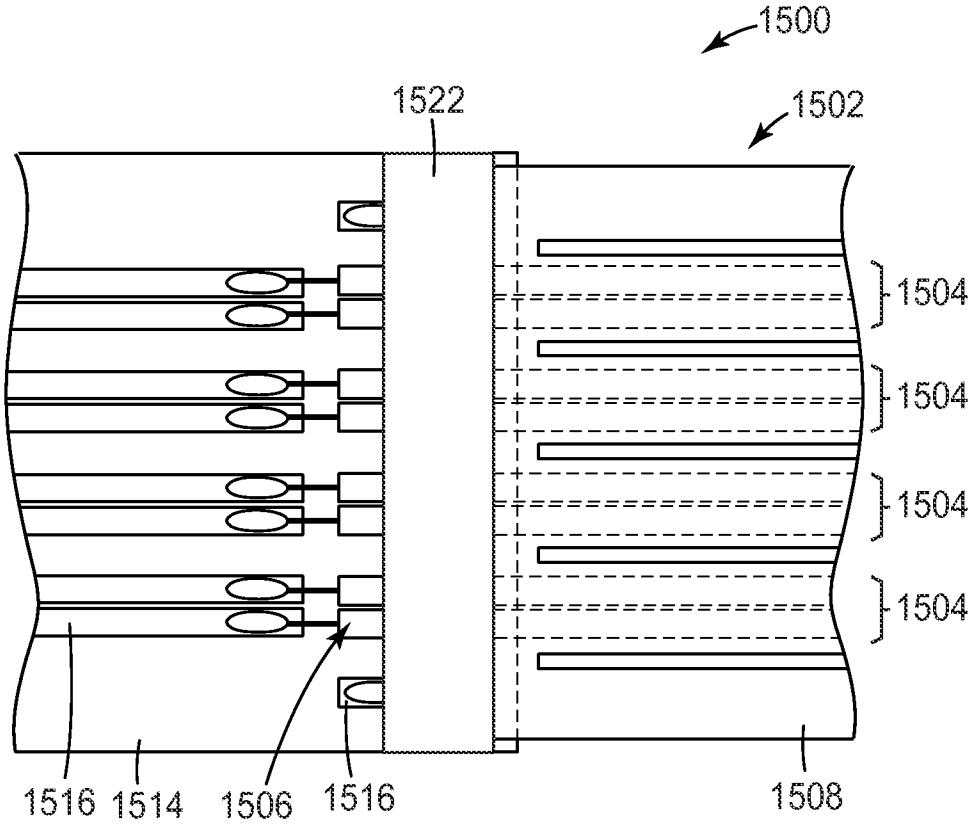
1500
1522
1502
1504
1504
1504
1504
1516
1514
1506
1516
1508

FIG. 9a

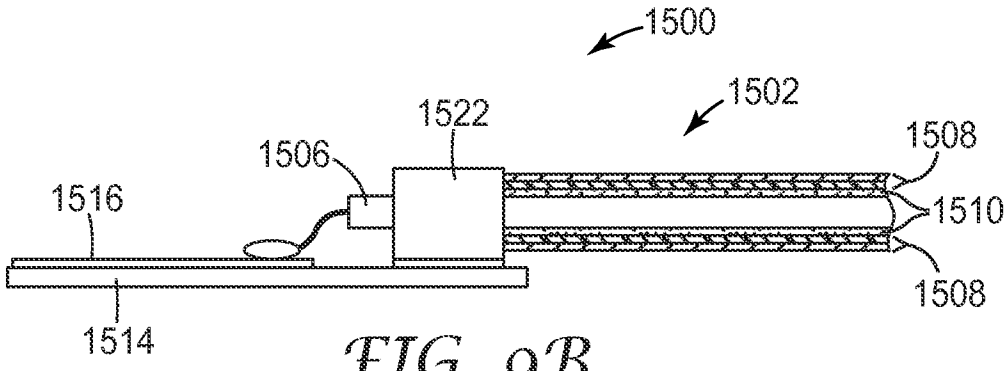
1500
1502
1522
1506
1508
1516
1510
1508
1514

FIG. 9B

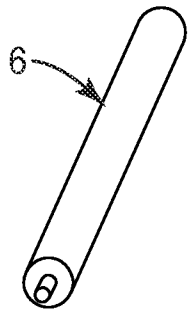

FIG. 10a



FIG. 10b

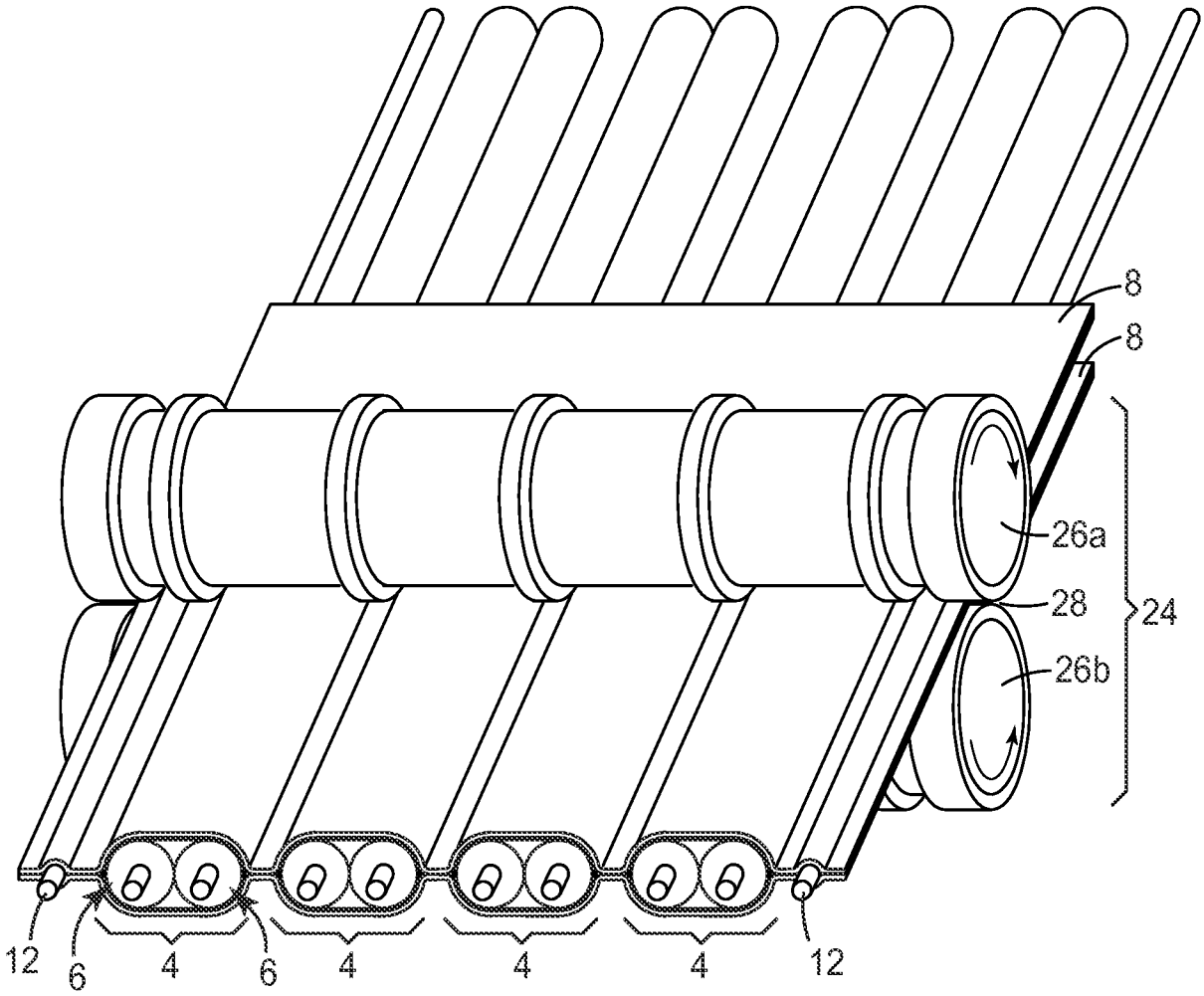

FIG. 10c

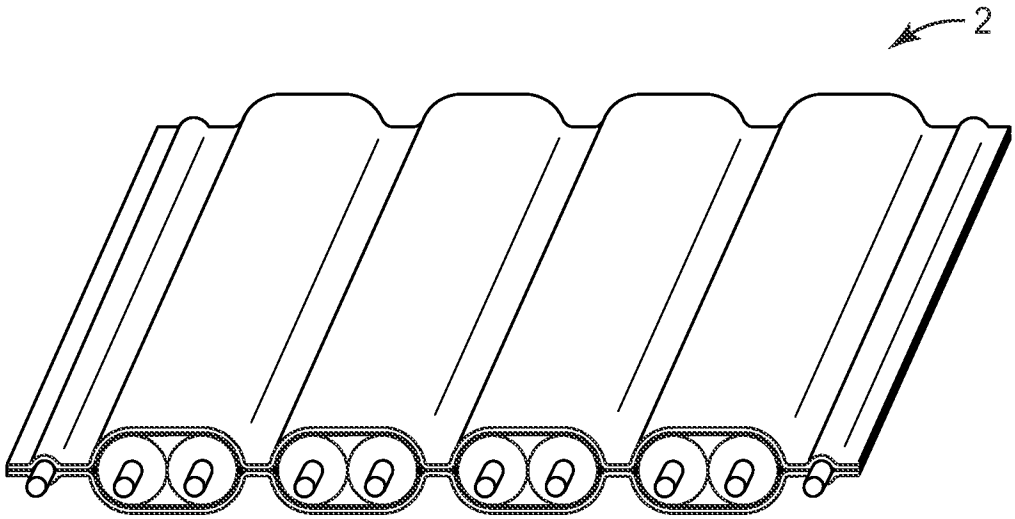

FIG. 10d

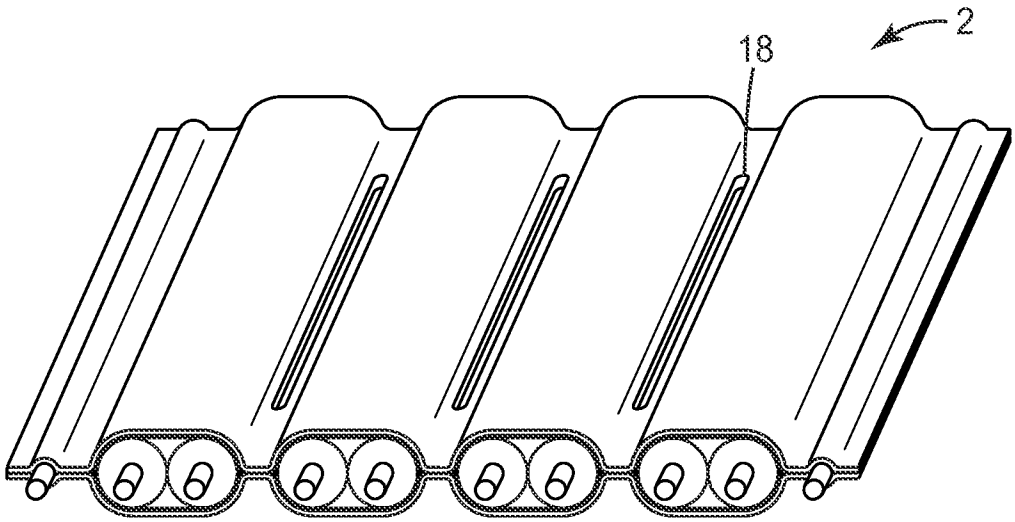

FIG. 10e

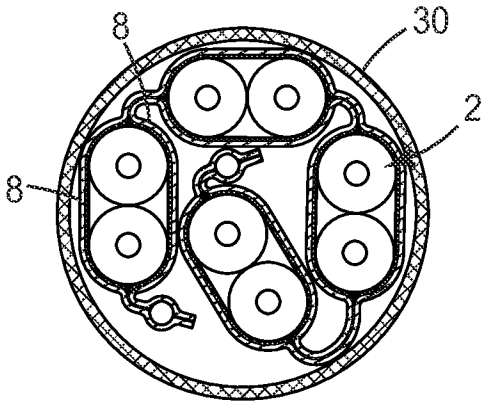

FIG. 10f

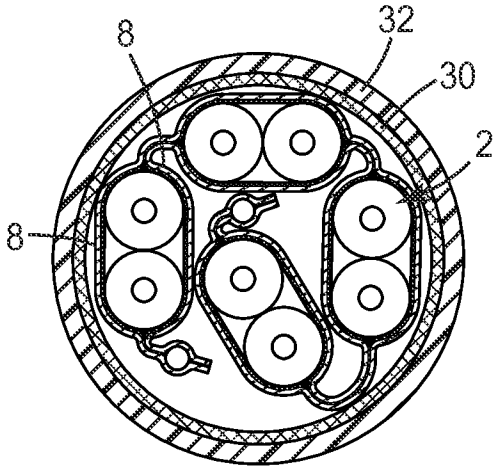

FIG. 10g

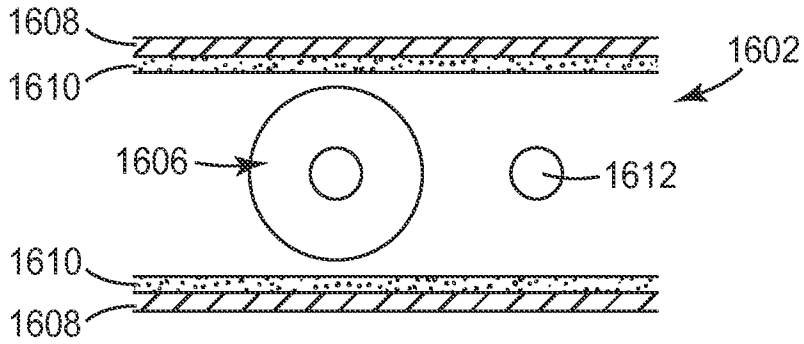

FIG. 11a

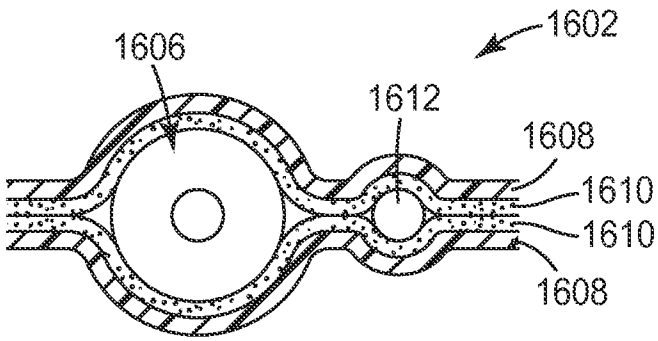

FIG. 11b

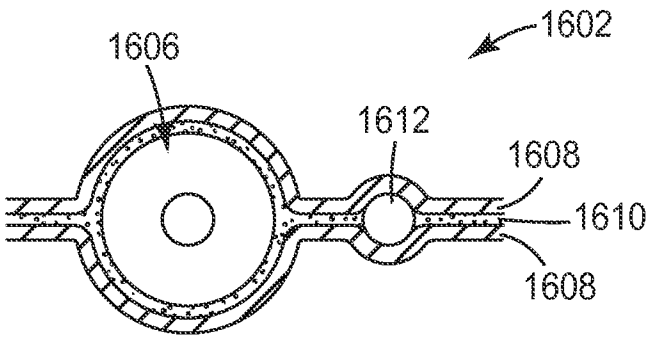

FIG. 11c

INTERNATIONAL SEARCH REPORT

International application No
PCT/US2010/038924

A. CLASSIFICATION OF SUBJECT MATTER
INV. H01B11/10 H01B7/08
ADD. H01B11/20

According to International Patent Classification (IPC) or to both national classification and IPC

B. FIELDS SEARCHED

Minimum documentation searched (classification system followed by classification symbols)
H01B

Documentation searched other than minimum documentation to the extent that such documents are included in the fields searched

Electronic data base consulted during the international search (name of data base and, where practical, search terms used)
EPO-Internal, WPI Data

C. DOCUMENTS CONSIDERED TO BE RELEVANT

Category*	Citation of document, with indication, where appropriate, of the relevant passages	Relevant to claim No.
X Y	DE 35 22 173 C1 (KABELMETAL ELECTRO GMBH) 31 July 1986 (1986-07-31) column 2, line 26 - line 50; figures 1-4 column 3, line 58 - column 5, line 20	1-9 10
Y	US 4 492 815 A (MAROS RONALD R [US]) 8 January 1985 (1985-01-08) column 1, line 6 - line 54; figures 1-5 column 2, line 59 - line 67	10
A	DE 25 47 152 A1 (TENGE HANS WERNER) 28 April 1977 (1977-04-28) page 18, paragraph 7; figure 11	1,5-10

-/--

[X] Further documents are listed in the continuation of Box C.

[X] See patent family annex.

* Special categories of cited documents :

"A" document defining the general state of the art which is not considered to be of particular relevance

"E" earlier document but published on or after the international filing date

"L" document which may throw doubts on priority claim(s) or which is cited to establish the publication date of another citation or other special reason (as specified)

"O" document referring to an oral disclosure, use, exhibition or other means

"P" document published prior to the international filing date but later than the priority date claimed

"T" later document published after the international filing date or priority date and not in conflict with the application but cited to understand the principle or theory underlying the invention

"X" document of particular relevance; the claimed invention cannot be considered novel or cannot be considered to involve an inventive step when the document is taken alone

"Y" document of particular relevance; the claimed invention cannot be considered to involve an inventive step when the document is combined with one or more other such documents, such combination being obvious to a person skilled in the art.

"&" document member of the same patent family

Date of the actual completion of the international search	Date of mailing of the international search report
30 November 2010	06/12/2010

Name and mailing address of the ISA/	Authorized officer
European Patent Office, P.B. 5818 Patentlaan 2 NL – 2280 HV Rijswijk Tel. (+31-70) 340-2040, Fax: (+31-70) 340-3016	Hillmayr, Heinrich

Form PCT/ISA/210 (second sheet) (April 2005)

INTERNATIONAL SEARCH REPORT

International application No
PCT/US2010/038924

C(Continuation). DOCUMENTS CONSIDERED TO BE RELEVANT

Category*	Citation of document, with indication, where appropriate, of the relevant passages	Relevant to claim No.
A	US 3 775 552 A (SCHUMACHER W) 27 November 1973 (1973-11-27) column 1, line 35 - line 39 column 2, line 33 - column 3, line 30; figures 1,2	1,5-10
A	JP 8 203350 A (OKI ELECTRIC CABLE; ANTEN KK) 9 August 1996 (1996-08-09) figures 1,2	1,5-10
A	GB 1 546 609 A (PIRELLI) 23 May 1979 (1979-05-23) page 1, lines 13-16; figures 1-5 page 1, line 64 - page 2, line 29	1,5-10

INTERNATIONAL SEARCH REPORT

Information on patent family members

International application No
PCT/US2010/038924

Patent document cited in search report	Publication date	Patent family member(s)	Publication date
DE 3522173 C1	31-07-1986	NONE	
US 4492815 A	08-01-1985	NONE	
DE 2547152 A1	28-04-1977	NONE	
US 3775552 A	27-11-1973	NONE	
JP 8203350 A	09-08-1996	NONE	
GB 1546609 A	23-05-1979	AR 212706 A1	15-09-1978
		CA 1081811 A1	15-07-1980
		ES 448491 A1	01-07-1977
		IT 1038547 B	30-11-1979