(12) INTERNATIONAL APPLICATION PUBLISHED UNDER THE PATENT COOPERATION TREATY (PCT)

(19) World Intellectual Property Organization
International Bureau

(43) International Publication Date
18 October 2007 (18.10.2007)

PCT

(10) International Publication Number
WO 2007/116416 A2

(51) International Patent Classification:
C08G 63/183 (2006.01)

(21) International Application Number:
PCT/IN2006/000460

(22) International Filing Date:
17 November 2006 (17.11.2006)

(25) Filing Language: English

(26) Publication Language: English

(30) Priority Data:
562/MUM/2006 10 April 2006 (10.04.2006) IN

(71) Applicant *(for all designated States except US)*: **RELIANCE INDUSTRIES LTD** [IN/IN]; Reliance Technology Centre, B-4 MIDC Industrial Area, Patalganga 410 220, Dist-Taigad, Maharashtra (IN).

(72) Inventors; and

(75) Inventors/Applicants *(for US only)*: **NADKARNI Vikas, Madhusudan** [IN/IN]; A18 Garden Estate, Off D P Road, Aundh, Pune 411007, Maharashtra (IN). **RAJAN Dubey** [IN/IN]; 201, Ambe Bhawan CHS, Plot No. 65, Sector 12, Vashi, Navi Mumbai 400703, Maharashtra (IN). **WADEKAR Sheeram, Ashok** [IN/IN]; 204, Mohandeep Co-Op Housing Society Ltd., Almeida Road, Chandanwadi, Panchpakhadi, Thane (West) 400601, Maharashtra (IN). **BOPARDIKAR Anand, Anil** [IN/IN]; C 33 A, Vyankatesh Nagar, Khamla-Road, Nagpur, M. S. 440025, Maharashtra (IN).

(81) Designated States *(unless otherwise indicated, for every kind of national protection available)*: AE, AG, AL, AM, AT, AU, AZ, BA, BB, BG, BR, BW, BY, BZ, CA, CH, CN, CO, CR, CU, CZ, DE, DK, DM, DZ, EC, EE, EG, ES, FI, GB, GD, GE, GH, GM, GT, HN, HR, HU, ID, IL, IN, IS, JP, KE, KG, KM, KN, KP, KR, KZ, LA, LC, LK, LR, LS, LT, LU, LV, LY, MA, MD, MG, MK, MN, MW, MX, MY, MZ, NA, NG, NI, NO, NZ, OM, PG, PH, PL, PT, RO, RS, RU, SC, SD, SE, SG, SK, SL, SM, SV, SY, TJ, TM, TN, TR, TT, TZ, UA, UG, US, UZ, VC, VN, ZA, ZM, ZW.

(84) Designated States *(unless otherwise indicated, for every kind of regional protection available)*: ARIPO (BW, GH, GM, KE, LS, MW, MZ, NA, SD, SL, SZ, TZ, UG, ZM, ZW), Eurasian (AM, AZ, BY, KG, KZ, MD, RU, TJ, TM), European (AT, BE, BG, CH, CY, CZ, DE, DK, EE, ES, FI, FR, GB, GR, HU, IE, IS, IT, LT, LU, LV, MC, NL, PL, PT, RO, SE, SI, SK, TR), OAPI (BF, BJ, CF, CG, CI, CM, GA, GN, GQ, GW, ML, MR, NE, SN, TD, TG).

Declarations under Rule 4.17:
— *as to applicant's entitlement to apply for and be granted a patent (Rule 4.17(ii))*
— *of inventorship (Rule 4.17(iv))*

Published:
— *without international search report and to be republished upon receipt of that report*

For two-letter codes and other abbreviations, refer to the "Guidance Notes on Codes and Abbreviations" appearing at the beginning of each regular issue of the PCT Gazette.

(54) **Title:** A PROCESS PLANT COMPRISING REACTOR INTERNALS COATED WITH LOW SURFACE ENERGY MATERIALS AND A PROCESS FOR THE PRODUCTION OF POLYESTER RESIN USING THE SAME

(57) **Abstract:** A process plant comprising melt polymerization reactor (1), pre-polymer particle former (2), preheater section (3) comprising preheater distribution plates (4) and plenum (5), nitrogen gas circulation lines (6) comprising nitrogen gas circulation loops (7), heater (8) and filter (9), conditioning vessel (10) and solid-state polymerization reactor (11) characterized in that side wall (12) of the preheater section (3), the preheater distribution plates (4), the plenum (5), the nitrogen gas circulation lines (6), the nitrogen gas circulation loops (7), the heater (8), the filter (9) and / or the conditioning vessel (10) are coated with a coating comprising compounds and / or metals exhibiting low surface energy to avoid deposit formation. A process for the production of polyester by solid-state polymerization using the above mentioned process plant comprising reactor internals coated with low surface energy materials is also disclosed. The use of nucleating agent in the above process to reduce the dust generation is also disclosed.

WO 2007/116416 A2

TITLE OF THE INVENTION

A process plant comprising reactor internals coated with low surface energy materials and a process for the production of polyester resin using the same

TECHNICAL FIELD OF THE INVENTION:

The present invention relates to a process plant comprising reactor internals coated with low surface energy materials for solid-state polymerization.

The present invention also relates to a process for the production of polyester resin by solid-state polymerization using above-mentioned process plant comprising reactor internals coated with low surface energy materials.

The present invention also relates to a process for the production of polyester resin by solid-state polymerization using above-mentioned process plant comprising reactor internals coated with low surface energy materials and adding nucleating agent as an additive at any stage during the melt polymerization, but before a particle former process.

BACKGROUND OF THE INVENTION:

Polyethylene terephthalate (PET) resins are well known for making films, fibers and packaged container applications. A process for the production of high molecular weight polyesters comprises melt polymerization followed by solid-state polymerization (SSP).

In the melt polymerization process, base prepolymer of Intrinsic Viscosity (IV) of about 0.4 to 0.65 dl/g is produced. The base prepolymer is either in the form of cylindrical chip or spherical chip and is amorphous in nature. The base chips are then subjected to solid-state polymerization after crystallizing it in a crystallizer so as to avoid sintering or lump formation in the solid-state polymerization reactor. Depending on the end application, polyester with different IV is produced by solid-state polymerization (ref : US 3,405,098, 3,544,525, 4,245,253, 4,238,593, and 5,408,035).

Another polymerization process which is different than conventional polymerization process is disclosed in US 5,510,454, 5,532,333, 5,540,868, 5,714,262, 5,830,982, and 6,451,966 which are incorporated herein as reference in their entirety.

In this polymerization process, a crystalline hemispherical prepolymer having IV of about 0.1 to 0.4 dl/g is formed using particle former process. This prepolymer is then used as a precursor for solid-state polymerization process to increase the IV from about 0.4 dl/g to about 1 dl/g.

Such low IV prepolymer particles can also be produced with other techniques that are well known in the art and can be subjected to solid-state polymerization for producing higher molecular weight polyesters. Examples of such particle formation processes are given in US patents 4123207 7,008,203.

Solid-state polymerization process involves three steps namely preheating of low molecular weight prepolymer in a preheater section (3), attaining intermediate IV (0.4 to 0.6 dl/g) in a reactor namely conditioning vessel (9) and then achieving final desired IV (0.7 to 1.2 dl/g) in a solid-state polymerization reactor (10). Preheater section (3) is a fluidized section in which prepolymer is heated at a temperature in the range of 210°C to 250°C under very high nitrogen gas flow.

In the melt polymerization process, hemispherical prepolymer particles are formed by dropping melt droplets on a preheated moving metal belt. Belt temperature is set between 100 to 200°C. Due to the very high temperature of melt droplet which is in the range of 260 to 300°C, quenching effect occurs when it falls on low temperature metal belt. As a result, bottom surface of hemispherical prepolymer particle exhibits different crystalline morphology as compared to the top dome surface. It is observed that for every hemispherical crystalline prepolymer particle, the bottom surface remains weaker in terms of mechanical strength as compared to top dome surface.

In the solid-state polymerization process, due to the weaker bottom surface and brittle nature of low molecular weight crystalline hemispherical prepolymer, the chips break resulting into dust formation and also into formation of low molecular weight oligomers including both linear and cyclic oligomers. Due to very high nitrogen gas flow in preheater section (3), dust, broken chips or low molecular weight oligomers get carried away with nitrogen gas into nitrogen circulation lines (6). It is also observed that broken chips, dust and low molecular weight oligomers stick to the preheater gas distribution plates (4), plenum (5) and sidewalls (12). The preheater gas distribution plates (4), plenum (5) and sidewalls (12) are made of material construction such as stainless steel 316. Over a

period of time, bridging of prepolymer, dust, broken particles or oligomers, hereafter referred as deposits, occurs in the preheater nitrogen gas distribution plates (4), plenum (5) and sidewalls (12) of preheater section (3) and nitrogen gas circulation lines (6). This results in the blocking of holes of preheater nitrogen gas distribution plate (4) and thereby disturbing nitrogen gas flow / velocity and also the fluidization of prepolymer in the preheater section (3). The pressure drop across the preheater nitrogen distribution plates (4) increases due to this bridging at a faster rate due to which frequent shutdown of the plant becomes necessary to clean these deposits.

Similarly deposits formation also seen in conditioning vessel (10), which is on the downstream of preheater section (3) in the solid-state polymerization process. In the conditioning vessel (10), the IV of prepolymer gets built up but at the same time the process also generates dust, liberates oligomers such as monohydroxy ethyl terephthalate (MHET), bishydroxyethyl terephthalate (BHET) and like along with other by products, such as ethylene glycol and water, which causes deposit formation. Oligomers get liberated to a large extent in conditioning vessel (10) where IV increases up to 0.6 dl/g. Oligomers get carried away along with nitrogen gas and tends to deposit on the dome surface of conditioning vessel (10). The top dome of conditioning vessel (10) is made of material construction such as stainless steel 316. Over a period of time, as a result of deposit formation, the pressure drop across conditioning vessel (10) and nitrogen gas circulation line (6) increases and nitrogen gas flow becomes inconsistent. Therefore more and more nitrogen gas flow is required to achieve the same intrinsic viscosity and also required to remove the polymerization byproducts. Due to the higher nitrogen gas consumption, the polyester production cost increases.

Deposits also formed on the nitrogen gas circulation lines (6), filters (9) and heaters (8) thereby reducing their life too. These deposits get degraded over a period of time due to very high temperature and residence time. When these degraded deposit get dislodged during the process thereby contaminating the final product in the form of black specs. Thus the product obtained is of not commercial quality.

We have filed Indian Patent Application no. 987/MUM/2005 on 22nd August 2005, which is related to an improved process for the continuous production of high molecular weight polyester resin having IV upto 1 dl/g produced from low molecular weight crystalline hemispherical prepolymer having IV of about 0.1 dl/g to about 0.4 dl/g comprising sodium benzoate or sodium acetate or any other suitable nucleating agent for improving

crystalline morphology, low dust, lower oligomers volatilization in solid state polymerization process and improved properties of articles made thereof. We have very well demonstrated the use of nucleating agent for reducing dust generation in the above application.

OBJECTS OF THE INVENTION:

An object of the invention is to provide a process plant comprising reactor internals coated with low surface energy materials for solid-state polymerization.

Another object of the invention is to provide a process plant comprising reactor internals coated with low surface energy materials for solid-state polymerization, where the process plant requires low maintenance.

Yet another object of the invention is to provide a process plant comprising reactor internals coated with low surface energy materials for solid-state polymerization, where the process plant avoids deposit formation.

Yet another object of the invention is to provide a process plant comprising reactor internals coated with low surface energy materials for solid-state polymerization, where the process plant has high productivity.

Yet another object of the invention is to provide a process plant comprising reactor internals coated with low surface energy materials for solid-state polymerization, where the process plant gives product with commercial quality consistently.

Yet another object of the invention is to provide a process plant comprising reactor internals coated with low surface energy materials for solid-state polymerization, where the process plant reduces the problem associated with the prior art.

Yet another object of the invention is to provide a process for the production of polyester by solid-state polymerization using above-mentioned plant comprising reactor internals coated with low surface energy materials, where the process is cost-effective.

Yet another object of the invention is to provide a process for the production of polyester by solid-state polymerization using above-mentioned plant comprising reactor internals coated with low surface energy materials, where the process eliminates deposit formation.

Yet another object of the invention is to provide a process for the production of polyester by solid-state polymerization using above-mentioned plant comprising reactor internals coated with low surface energy materials, where the process requires low maintenance.

Yet another object of the invention is to provide a process for the production of polyester by solid-state polymerization using above-mentioned plant comprising reactor internals coated with low surface energy materials for solid-state polymerization, where the process gives product with commercial quality consistently.

Yet another object of the invention is to provide a process for the production of polyester by solid-state polymerization using above-mentioned plant comprising reactor internals coated with low surface energy materials, where the process reduces the problem associated with the prior art.

Yet another object of the invention is to provide a process for the production of polyester resin by solid-state polymerization using above-mentioned process plant comprising reactor internals coated with low surface energy materials, where the process comprising addition of nucleating agent as an additive at any stage during the melt polymerization, but before a particle former process.

Detailed Description:

According to the invention, there is provided a process plant comprising reactor internals coated with low surface energy materials, the process plant comprises melt polymerization reactor (1), pre-polymer particle former (2), preheater section (3) comprising preheater distribution plates (4) and plenum (5), nitrogen gas circulation lines (6) comprising nitrogen gas circulation loops (7), heater (8) and filter (9), conditioning vessel (10) and solid-state polymerization reactor (11) characterized in that side wall (12) of the preheater section (3), the preheater distribution plates (4), the plenum (5), the nitrogen gas circulation lines (6), the nitrogen gas circulation loops (7), the heater (8), the filter (9) and / or the conditioning vessel (10) are coated with a coating comprising compounds and / or metals exhibiting low surface energy to avoid deposit formation.

The block diagram of the process plant is given in figure 1.

According to the invention, there is also provided a process for the production of polyester by solid-state polymerization using the above mentioned process plant comprising reactor internals coated with low surface energy materials; the process comprising melt polymerizing at least one dicarboxylic acid such as terephthalic acid, isophthalic acid, naphthalene dicarboxylic acid or 4,4'-biphenyl dicarboxylic acid or monoesters thereof or diesters thereof and at least one glycol or polyol such as monoethylene glycol, diethylene glycol, triethylene glycol, propylene glycol, dipropylene glycol, butylenes glycol or 1,4-cyclohexane diol at temperature in the range of 250°C - 290°C to obtain low molecular weight polyester prepolymer having IV of about 0.1 to about 0.45 dl/g; producing crystalline hemispherical prepolymer of polyesters by a particle former process at temperature in the range of 110 to 160°C and polymerizing prepolymer by solid- state polymerization to obtain high molecular weight polyester resin having IV of about 0.5 dl/g to about 1.2 dl/g characterized in that side wall (12) of the preheater (3), the preheater distribution plates (4), the plenum (5), the nitrogen gas circulation lines (6), the nitrogen gas circulation loops (7), the heater (8), the filter (9) and / or the conditioning vessel (10) are coated with a coating comprising compounds and / or metals exhibiting low surface energy to avoid deposit formation.

Preferably the coating comprising compounds and / or metals exhibiting low surface energy are selected from flouropolymers coatings such as polytertrafluoroethylene (PTFE), Ethylene-ChloroTriFluoro-Ethylene (ECTFE), fluorinated ethylene propylene (FEP) or polyhexafluropropylene (PHFP) etc, or silicone based coatings or polyphenylene sulfide based coatings or metallic coating such as nitriding or chromium oxide coatings. The coating term used herein is intended to cover any nonstick coating. Preferably, the coating thickness is of at least 10 μ. The side wall (12) of the preheater section (3), the preheater distribution plates (4), the plenum (5), the nitrogen gas circulation lines (6), the nitrogen gas circulation loops (7), the heater (8), the filter (9) and / or the conditioning vessel (10) are coated with the coating comprising compounds and / or metals exhibiting low surface energy by any conventional technique.

According to the invention, there is also provided a process for the production of polyester by solid-state polymerization using the above mentioned process plant comprising reactor internals coated with low surface energy materials, the process comprising melt

polymerizing at least one dicarboxylic acid such as terephthalic acid, isophthalic acid, naphthalene dicarboxylic acid or 4,4'-biphenyl dicarboxylic acid or monoesters thereof or diesters thereof and at least one glycol or polyol such as monoethylene glycol, diethylene glycol, triethylene glycol, propylene glycol, dipropylene glycol, butylenes glycol or 1,4-cyclohexane diol at temperature in the range of 250°C - 290°C to obtain low molecular weight polyester prepolymer having IV of about 0.1 to about 0.45 dl/g; adding nucleating agent as an additive at any stage during the melt polymerization, but before a particle former process; producing crystalline hemispherical prepolymer of polyesters by a particle former process at temperature in the range of 110 to 160°C and polymerizing prepolymer by solid- state polymerization to obtain high molecular weight polyester resin having IV of about 0.5 dl/g to about 1.2 dl/g characterized in that side wall (12) of the preheater section (3), the preheater distribution plates (4), the plenum (5), the nitrogen gas circulation lines (6), the nitrogen gas circulation loops (7), the heater (8), the filter (9) and / or the conditioning vessel (10) are coated with a coating comprising compounds and / or metals exhibiting low surface energy to avoid deposit formation.

The nucleating agent used in the process is selected from organo-metallic compounds such as sodium benzoate or sodium acetate or organic compounds such as carbon black or inorganic compounds having particle size from about 0.001 micron to 10 micron particularly from 0.002 to 0.5 micron such as barium sulfate or silica or any other suitable nucleating agent. Preferably, the nucleating agent is added in the range of about 0.001 wt % to 5 wt %. The use of nucleating agent in the above mention process plant as well as process generates substantially low dust and produces uniform hemispherical shape prepolymer having uniform crystallinity, faster crystallization rate and higher onset of melting.

The present invention is further exemplified by the following non-limiting examples.

Example 1:

Crystalline prepolymer of polyethylene terephthalate having IV 0.245 dl/g was prepared by the process according to patent US 5,510,454. This was solid-state polymerized under inert atmosphere to raise the IV upto 1 dl/g. During solid state polymerization process, the material was passed through a preheater section (3) at a temperature 236°C for at least 5 minutes residence time; original material of construction of plenum (5) in preheater was stainless steel SS 316 which was coated with flouropolymer based nonstick coating. The

material was further passed through a conditioning vessel (10) and maintained at temperature 232°C under nitrogen gas / solid ratio 0.6 for at least two hours residence time. Finally material was passed through a solid-state polymerization reactor (11) and maintained at temperature of 221°C for at least 23 hours residence time under nitrogen gas to solid ratio 0.5. Schematic diagram of solid – state polymerization process reactor is given in Figure 1. The pressure drop across the preheater plenum was measured for 13 days run which is shown in figure 2.

Comparative Example

Crystalline prepolymer of polyethylene terephthalate having IV 0.245 dl/g was prepared according to the process described in patent US 5,510,454. This was solid-state polymerized under inert atmosphere to raise the IV up to 1 dl/g. During solid state polymerization process, the material was passed through a preheater section (3) at a temperature 236°C for at least 5 minutes residence time; material of construction of preheater plenum (5) was stainless steel SS 316 on which no coating was done. The material was passed through a conditioning vessel (10) and maintained at 232°C under nitrogen gas / solid ratio 0.6 for at least two hours residence time. The material was further passed through a solid-state polymerization reactor (11) and maintained at 221°C temperature for at least 23 hours residence time under nitrogen gas to solid ratio 0.5. Schematic diagram of solid–state polymerization process is given in Figure 1. The pressure drop across the preheater plenum was measured for 13 days run which is shown in figure 2.

Figure 2 illustrates the pressure drop (15) data across preheater plenum was generated for 13 days run (16). The pressure drop across the preheater plenum without coat of compound or metal exhibiting low surface energy increases with number of days of run (13). On the contrary when the preheater plenum was coated with the coating comprising compounds and / or metal exhibiting low surface energy, the pressure drop across the plenum remains constant (14). Photographs of preheater plenum with coating (A) and without coating (B) were also taken to visually monitor the extent of deposits formation, which is shown in figure 3. The deposit was not formed on preheater plenum coated with low energy surface material even after 13 days of run. This resulted in extended life of solid-state polymerization plant run days and cutting down the maintenance cost. As there is no deposit formation and hence no degradation of deposit, thus resulted into production of product with commercial quality consistently.

CLAIMS :

1. A process plant comprising reactor internals coated with low surface energy materials,

the process plant comprises melt polymerization reactor (1), pre-polymer particle former (2), preheater section (3) comprising preheater distribution plates (4) and plenum (5), nitrogen gas circulation lines (6) comprising nitrogen gas circulation loops (7), heater (8) and filter (9), conditioning vessel (10) and solid-state polymerization reactor (11) characterized in that side wall (12) of the preheater section (3), the preheater distribution plates (4), the plenum (5), the nitrogen gas circulation lines (6), the nitrogen gas circulation loops (7), the heater (8), the filter (9) and / or the conditioning vessel (10) are coated with a coating comprising compounds and / or metals exhibiting low surface energy to avoid deposit formation.

2. A process plant as claimed in claim 1, wherein the coating comprising compounds and / or metals exhibiting low surface energy are selected from flouropolymers coatings such as polytertrafluoroethylene (PTFE), Ethylene-ChloroTriFluoro-Ethylene (ECTFE), fluorinated ethylene propylene (FEP) or polyhexafluropropylene (PHFP) or silicone based coatings or polyphenylene sulfide based coatings or metallic coating such as nitriding or chromium oxide coating.

3. A process for the production of polyester by solid-state polymerization using the process plant comprising reactor internals coated with low surface energy materials as claimed in claim1,

the process comprising melt polymerizing at least one dicarboxylic acid such as terephthalic acid, isophthalic acid, naphthalene dicarboxylic acid or 4,4'-biphenyl dicarboxylic acid or monoesters thereof or diesters thereof and at least one glycol or polyol such as monoethylene glycol, diethylene glycol, triethylene glycol, propylene glycol, dipropylene glycol, butylenes glycol or 1,4-cyclohexane diol at temperature in the range of 250°C - 290°C to obtain low molecular weight polyester prepolymer having IV of about 0.1 to about 0.45 dl/g; producing crystalline hemispherical prepolymer of polyesters by a particle former process at temperature in the range of 110 to 160°C and polymerizing prepolymer by solid- state polymerization to obtain high molecular weight polyester resin having IV of about 0.5 dl/g to about 1.2 dl/g characterized in that side wall (12) of the preheater (3), the preheater distribution plates (4), the plenum (5), the nitrogen gas circulation lines

(6), the nitrogen gas circulation loops (7), the heater (8), the filter (9) and / or the conditioning vessel (10) are coated with a coating comprising compounds and / or metals exhibiting low surface energy to avoid deposit formation.

4. A process for the production of polyester by solid-state polymerization using the process plant comprising reactor internals coated with low surface energy materials as cliamed in claim1,

the process comprising melt polymerizing at least one dicarboxylic acid such as terephthalic acid, isophthalic acid, naphthalene dicarboxylic acid or 4,4'-biphenyl dicarboxylic acid or monoesters thereof or diesters thereof and at least one glycol or polyol such as monoethylene glycol, diethylene glycol, triethylene glycol, propylene glycol, dipropylene glycol, butylenes glycol or 1,4-cyclohexane diol at temperature in the range of 250°C - 290°C to obtain low molecular weight polyester prepolymer having IV of about 0.1 to about 0.45 dl/g; adding nucleating agent as an additive at any stage during the melt polymerization, but before a particle former process; producing crystalline hemispherical prepolymer of polyesters by a particle former process at temperature in the range of 110 to 160°C and polymerizing prepolymer by solid- state polymerization to obtain high molecular weight polyester resin having IV of about 0.5 dl/g to about 1.2 dl/g characterized in that side wall (12) of the preheater section (3), the preheater distribution plates (4), the plenum (5), the nitrogen gas circulation lines (6), the nitrogen gas circulation loops (7), the heater (8), the filter (9) and / or the conditioning vessel (10) are coated with a coating comprising compounds and / or metals exhibiting low surface energy to avoid deposit formation.

5. A process as claimed in claim 4, wherein the nucleating agent is selected from organo-metallic compounds such as sodium benzoate or sodium acetate or organic compounds such as carbon black or inorganic compounds such as barium sulfate or silica or any other suitable nucleating agent.

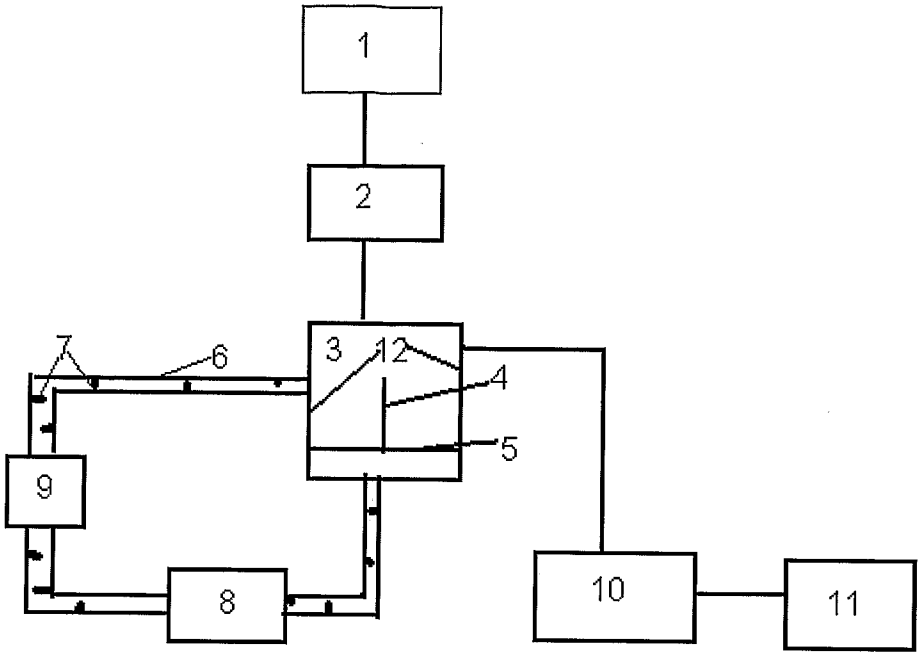

Figure 1

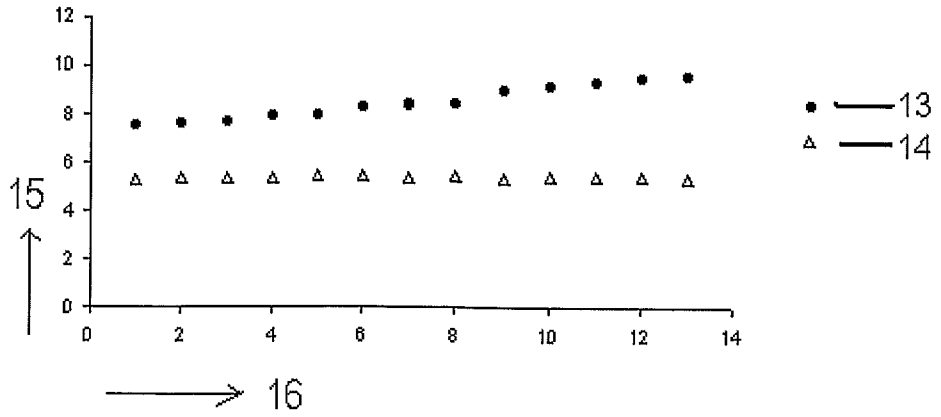

Figure 2:

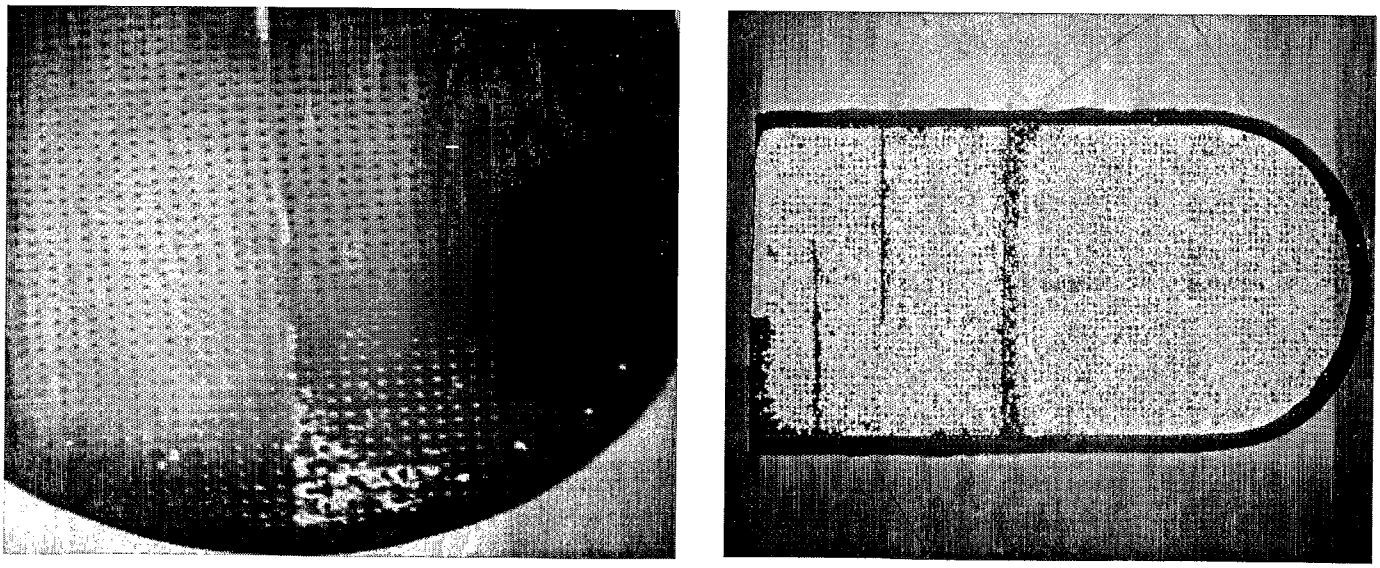

(A) **(B)**

Figure 3