(12) INTERNATIONAL APPLICATION PUBLISHED UNDER THE PATENT COOPERATION TREATY (PCT)

(19) World Intellectual Property Organization
International Bureau

(43) International Publication Date
21 December 2000 (21.12.2000)

PCT

(10) International Publication Number
WO 00/77786 A1

(51) International Patent Classification[7]: G11B 20/10

(21) International Application Number: PCT/JP00/03915

(22) International Filing Date: 15 June 2000 (15.06.2000)

(25) Filing Language: English

(26) Publication Language: English

(30) Priority Data:
11/170325 16 June 1999 (16.06.1999) JP

(71) Applicant: SONY COMPUTER ENTERTAINMENT INC. [JP/JP]; 1-1, Akasaka 7-chome, Minato-ku, Tokyo 107-0052 (JP).

(72) Inventor: YAMANOUE, Kaoru; Sony Computer Entertainment Inc., 1-1, Akasaka 7-chome, Minato-ku, Tokyo 107-0052 (JP).

(74) Agent: CHIBA, Yoshihiro; Shinjuku Maynds Tower 16F., 1-1, Yoyogi 2-chome, Shibuya-ku, Tokyo 151-0053 (JP).

(81) Designated States *(national)*: AU, BR, CA, CN, KR, MX, NZ, RU, SG.

(84) Designated States *(regional)*: European patent (BE, CH, DE, DK, ES, FI, FR, GB, IT, NL, SE).

Published:
— *With international search report.*
— *Before the expiration of the time limit for amending the claims and to be republished in the event of receipt of amendments.*

For two-letter codes and other abbreviations, refer to the "Guidance Notes on Codes and Abbreviations" appearing at the beginning of each regular issue of the PCT Gazette.

(54) Title: DATA TRANSFER APPARATUS, DATA TRANSFER SYSTEM, AND DATA TRANSFER METHOD WITH DOUBLE BUFFERING

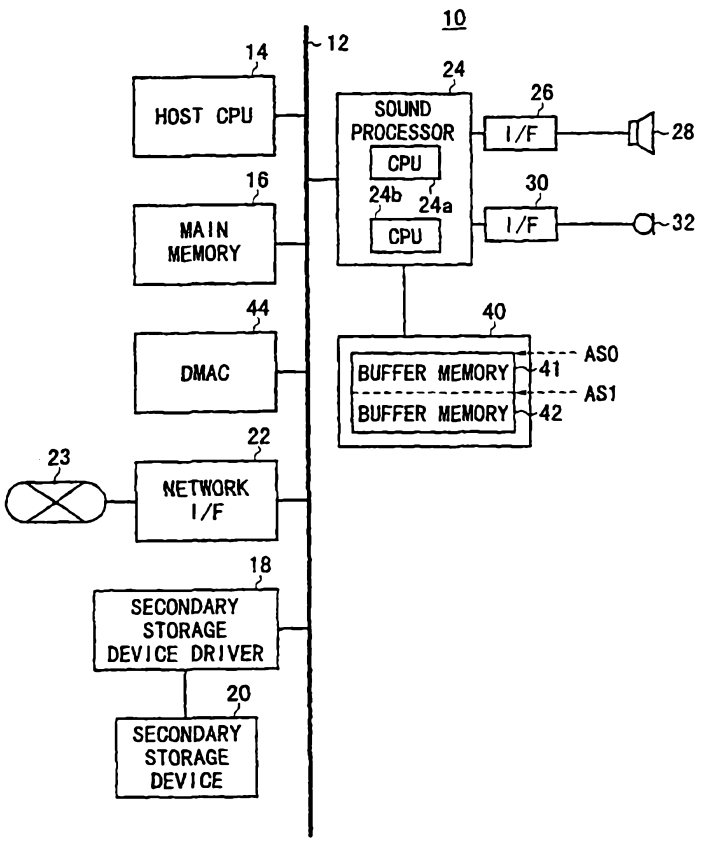

(57) Abstract: When data are transferred from a host CPU (14) to a sound processor (24) which reproduces music sounds on a real-time basis, the burden on the host CPU (14) is greatly reduced. Upon transfer of music sound data from the host CPU (14) as a transfer source, the host CPU (14) and a DMAC (44) handle a data size of 2560 words that is greater than the storage capacity of 256 words of buffer memories (41, 42). After music sound data have been transferred to one of the buffer memories (41) until it becomes full of the data, the sound processor (24) temporarily suspends the transfer of the data. When music sound data in the other buffer memory (42) are reproduced by the sound processor (24) and the buffer memory (42) becomes empty, the sound processor (24) sets the empty buffer memory (42) as a transfer destination memory, cancels the temporary suspension of the transfer of the data, and resumes the transfer of the data to the empty buffer memory (42).

WO 00/77786 A1

DESCRIPTION

DATA TRANSFER APPARATUS, DATA TRANSFER SYSTEM, AND DATA TRANSFER METHOD WITH DOUBLE BUFFERING

Technical Field

The present invention relates to a data transfer apparatus, a data transfer system, and a data transfer method which use buffer memories for transferring data from a data transfer source to a data transfer destination.

Background Art

In recent years, secondary storage devices such as CD-ROMs (Compact Disk Read-Only Memories), hard disks, etc. have their storage capacity greatly increased for storing a large amount of data such as music sound data.

Processors capable of generating highly expressive music sound data on a real-time basis are available for easy use.

It is also possible for users to obtain music sound data via a network or a public circuit system.

Music sound data thus obtained are transferred directly, i.e., not as compressed data, from a secondary storage device, a processor, or a public circuit system to a music sound data playback device, which reproduces the music sound data continuously on a real-time basis.

In order for the music sound data playback device to

reproduce the music sound data continuously on a real-time basis, the music sound data playback device performs a double-buffer memory process which employs FIFO (first-in first-out) memories or divided memory areas of a RAM (Random-Access Memory).

According to the double-buffer memory process, when one of two buffer memories is full of data, the data is read from the buffer memory to start reproducing music sound data, for example, and before the reading of the data from the buffer memory ends, data are transferred to the other buffer memory until it is full of data. When the buffer memory which is being read becomes empty, the reading of the data is switched to the other buffer memory. In this manner, the stored data can be read continuously from the buffer memories to allow music sound data, for example, to be reproduced continuously.

The conventional double-buffer memory process incorporates an interrupt process for indicating the empty state of one of the buffer memories to a processor such as a CPU (Central Processing Unit) as a data transfer source.

However, the interrupt process is problematic in that it poses a large burden on the processor because the interrupt process needs to be performed after register data and various items of information in the processor have to be temporarily saved.

In order to output data according to the double-buffer memory process, it is necessary for one of the buffer memo-

ries to be full of data in an initial data transfer stage so that the outputted data will not be interrupted. For executing a first playback session quickly in response to a playback command, the buffer memories should preferably be of as small a storage capacity as possible. With the buffer memories being of a small storage capacity, however, the interrupt process is required to be performed more frequently, posing a greater burden on the processor.

Disclosure of Invention

It is therefore an object of the present invention to provide a data transfer apparatus, a data transfer system, and a data transfer method which reduce the number of times that an interrupt process is carried out for thereby substantially reducing a burden on a processor as a data transfer source.

An apparatus for transferring data according to the present invention includes a data transfer source processor, substantially two buffer memories which can be switched alternately between writing and reading memories, and a data transfer destination processor, the arrangement being such that when the data transfer source processor sends an instruction to start transfer data to the data transfer destination processor, the data transfer destination processor switches one of the two buffer memories to the writing memory and the other of the two buffer memories to the reading memory, and controls reading of data from and writing of da-

ta into the two buffer memories.

With the above arrangement, since the data transfer destination processor switches one of the two buffer memories to the writing memory and the other of the two buffer memories to the reading memory, the number of interrupts that occur to the data transfer source processor can be reduced, thus reducing the burden on the data transfer source processor.

The data transfer destination processor may comprise means for specifying one of the buffer memories which is not the reading memory as the writing memory and sending a data transfer request to the data transfer source processor when the instruction to start transfer data is sent from the data transfer source processor, writing data in the buffer memory specified as the writing memory until the buffer memory becomes full and thereafter waiting until the buffer memory specified as the reading memory becomes empty when the data are transferred from the data transfer source processor, sending a data transfer request to the data transfer source processor, switching the buffer memories between the reading and writing memories, and controlling reading of data from and writing of data into the buffer memories when the buffer memory specified as the reading memory becomes empty, and continuously controlling reading of data from and writing of data into the buffer memories until an entire size of the transferred data has been written. The data transfer destination processor can perform a data reading process continu-

ously without interruption.

The size of data transferred in one cycle may be a predetermined data size rather than the data size that is large enough to make the buffer memory full.

Each of the two buffer memories may comprise a plurality of buffer memories to allow the principles of the invention to find a wider range of applications.

The transferred data may comprise music sound data.

A data transfer system according to the present invention includes a bus, a host processor connected to the bus, a music sound processor connected to the bus, and substantially two buffer memories which can be switched alternately between writing and reading memories, the buffer memories being connected to the music sound processor, the arrangement being such that music sound data are transferred from the host processor via the bus and the music sound processor to the buffer memories, the music sound processor comprising means for switching one of the two buffer memories to the writing memory and the other of the two buffer memories to the reading memory, and controlling reading of data from and writing of data into the two buffer memories, when the host processor sends an instruction to start transfer data to the music sound processor.

With the above arrangement, since the music sound processor switches one of the two buffer memories to the writing memory and the other of the two buffer memories to the reading memory, the number of interrupts that occur to the host

processor can be reduced, thus reducing the burden on the host processor.

The music sound processor may comprise means for specifying one of the buffer memories which is not the reading memory as the writing memory and sending a data transfer request to the host processor when the instruction to start transfer data is sent from the host processor, writing data in the buffer memory specified as the writing memory until the buffer memory becomes full and thereafter waiting until the buffer memory specified as the reading memory becomes empty when the data are transferred from the host processor, sending a data transfer request to the host processor, switching the buffer memories between the reading and writing memories, and controlling reading of data from and writing of data into the buffer memories when the buffer memory specified as the reading memory becomes empty, and continuously controlling reading of data from and writing of data into the buffer memories until an entire size of the transferred data has been written. The music sound processor can perform a data reading process continuously without interruption.

In the data transfer system, the size of data transferred in one cycle may be a predetermined data size rather than the data size that is large enough to make the buffer memory full.

In the data transfer system, each of the two buffer memories may comprise a plurality of buffer memories to al-

low the principles of the invention to find a wider range of applications.

The plurality of buffer memories may store left and right stereophonic music sound data.

A data transfer system according to the present invention includes a bus, a host processor connected to the bus, a music sound processor connected to the bus, and substantially two buffer memories which can be switched alternately between writing and reading memories, the buffer memories being connected to the music sound processor, the arrangement being such that music sound data are transferred from the music sound processor via the bus to the host processor, the music sound processor comprising means for switching one of the two buffer memories to the writing memory and the other of the two buffer memories to the reading memory, and controlling reading of data from and writing of data into the two buffer memories, when data are transferred to the host processor.

With the above arrangement, data can be transferred from the music sound processor to the host processor with a reduced number of interrupts.

The music sound processor may comprise means for, before writing of data into one of the buffer memories is finished, completing reading of data from the other buffer memory and transferring the read data to the host processor, and starting to write data in the other buffer memory which is empty when the writing of data into the one of the buffer

memories is finished. The transfer of the data from the music sound processor to the buffer memories is not interrupted. Since the music sound processor mainly controls the transfer of the data, the burden on the host processor for the transfer of the data is reduced.

According to the present invention, there is also provided a method of transferring data in a data transfer system having a bus, a host processor connected to the bus, an output processor connected to the bus, substantially two buffer memories and an output device connected to the output processor, comprising the steps of transferring data from the host processor to the output processor until one of the buffer memories becomes full of the data, thereafter, temporarily suspending transfer of the data, reading data from the other of the buffer memories with the output processor and outputting the read data from the output processor to the output device, when the other buffer memory become empty, setting the other buffer memory as a transfer destination memory and canceling temporary suspension of the transfer of data, and resuming the transfer of the data from the host processor to the other buffer memory.

With the above method, inasmuch as the transfer of the data to the buffer memories is primarily controlled by the output processor, the burden on the host processor for the transfer of the data is reduced.

In the above method, the data may comprise music sound data.

The above and other objects, features, and advantages of the present invention will become more apparent from the following description when taken in conjunction with the accompanying drawings in which preferred embodiments of the present invention are shown by way of illustrative example.

Brief Description of Drawings

FIG. 1 is a block diagram of a data recording and reproducing apparatus according to an embodiment of the present invention;

FIG. 2 is a flowchart of an operation sequence of the data recording and reproducing apparatus shown in FIG. 1;

FIG. 3 is a diagram showing data stored in a main memory in the order in which the data have been transferred;

FIG. 4 is a diagram showing data stored in the main memory in respective channels;

FIG. 5 is a diagram of a reference tag representing readout address for data stored in respective channels;

FIG. 6 is a detailed flowchart of an automatic DMA transfer process in the operation sequence shown in FIG. 2;

FIG. 7 is a diagram showing one of buffer memories that is full of data;

FIG. 8 is a diagram showing data stored in the buffer memory, illustrative of a data transfer reading process;

FIG. 9 is a flowchart of an operation sequence according to a comparative example;

FIG. 10 is a diagram showing a basic process for trans-

ferring data to a buffer memory and reading dada from the buffer memory;

FIG. 11 is a block diagram of a data recording and reproducing apparatus according to another embodiment of the present invention;

FIG. 12 is a diagram illustrative of a data transfer reproducing process of the data recording and reproducing apparatus shown in FIG. 11;

FIG. 13 is a flowchart of the data transfer reproducing process of the data recording and reproducing apparatus shown in FIG. 11;

FIG. 14 is a diagram illustrative of a multi-channel data transfer process in a data transfer order format according to still another embodiment of the present invention;

FIG. 15 is a diagram illustrative of a multi-channel data transfer process in a reference tag format according to yet another embodiment of the present invention;

FIG. 16 is a diagram illustrative of a process for transferring data from a buffer memory to a main memory; and

FIG. 17 is a diagram illustrative of a process for transferring a number of data from a buffer memory to a main memory.

Best Mode for Carrying Out the Invention

One embodiment of the present invention will be exemplified with reference to accompanying drawings.

FIG. 1 shows in block form a data recording and reproducing apparatus 10 according to an embodiment of the present invention.

As shown in FIG. 1, the data recording and reproducing apparatus 10 has a bus 12 to which there is connected a host CPU (host processor) 14 for controlling the data recording and reproducing apparatus 10 in its entirety. The host CPU 14 serves as a data transfer source processor or a data transfer destination processor.

To the bus 12, there are also connected a main memory 16 comprising a DRAM (Dynamic Random-Access Memory) and a secondary storage device 20 such as a hard disk or the like via a secondary storage device drive 18.

A public circuit system 23 is connected to the bus 12 via a network interface 22. Other networks (not shown) are also connected to the bus 12. Data can be supplied to and from the data recording and reproducing apparatus 10 using the public circuit system 23 and the other networks.

To the bus 12, there is further connected a sound processor or sound processing unit (SPU) 24 which is a sound music processor that functions as a data transfer destination processor and also as a data transfer source processor. The sound processor 24 has two CPUs 24a, 24b for controlling the sound processor 24 in its entirety.

The sound processor 24 also has, in addition to the two CPUs 24a, 24b, a ROM storing a control program, etc., a working RAM, a counter, a timer, a DAC (Digital-to-Analog

Converter), and an ADC (Analog-to-Digital Converter). The sound processor 24 is capable of transferring data and generating music sound data.

A speaker 28 as a sound output device (output unit) is connected to the sound processor 24 via an interface 26, and a microphone 32 as a sound input device (input unit) is connected to the sound processor 24 via an interface 30. Therefore, the sound processor 24 also functions as an input/output processor.

To the sound processor 24, there is also connected a buffer memory 40 as a double buffer which comprises two buffer memories 41, 42 controlled for data reading and writing by the sound processor 24. The buffer memories 41, 42 may comprise divided memory areas of a single memory as shown in FIG. 1, or may comprise independent two memories. Therefore, the buffer memory 40 may comprise virtually two buffer memories. The divided buffer memories 41, 42 are also referred to as channels 41, 42, respectively.

Each of the buffer memories 41, 42 may further be divided into a plurality of memories for driving a four-channel speaker system, for example.

Each of the buffer memories 41, 42 has a storage capacity capable of 256 words each of 16 bits/word. The buffer memories 41, 42 have respective leading memory addresses AS1, AS1. Actually, the buffer memories 41, 42 have a storage capacity of at least 512 words as they functions as a local memory for the sound processor 24.

The CPU 24a of the sound processor 24 writes data into one of the buffer memories, e.g., the buffer memory 41, and the other CPU 24b reads data from the other buffer memory, i.e., the buffer memory 42.

In order to prevent the reading of data from the buffer memory 40 from being interrupted, when the buffer memory 42 becomes empty after the buffer memory 41 has become full of data, the CPU 24a reads the data from the buffer memory 41, and the CPU 24b starts writing data into the empty buffer memory 42.

The CPUs 24a, 24b write data into the buffer memory 40 more quickly than they read data from the buffer memory 40. In this manner, the sound processor 24 can read data from and writes data in the buffer memory 40 in a parallel processing on a real-time basis without interrupting the reading of data from the buffer memory 40.

More specifically, when the sound processor 24 outputs sounds from the speaker 28, in order that data are read uninterruptedly from the buffer memory 41 or 42 by the CPU 24a or 24b, i.e., in order to reproduce the data continuously, data are written into the other buffer memory 42 or 41 by the other CPU 24b or 24a more quickly than data are read therefrom.

When sounds are entered from the microphone 32, in order that data are written uninterruptedly into the buffer memory 41 or 42, i.e., in order to record the data continuously, data are read from the other buffer memory 42 or 41

more quickly than data are written thereinto.

A DMAC (Direct Memory Access Controller) 44 is connected to the bus 12 for directly transferring data between the secondary storage device 20 and the main memory 16 or between the main memory 16 and the buffer memory 40 of the sound processor 24.

The DMAC 44 normally functions as a data transfer source processor for data transfer between the main memory 16 and the buffer memory 40, and also functions as a data transfer destination processor when necessary.

A data transfer process for transferring data, whose overall size is 2560 words, from a host memory, i.e., the main memory 16, to a local memory, i.e., the buffer memory 40, in the data recording and reproducing apparatus 10 will be described below with reference to FIG. 2. In this data transfer process, after data start being transferred from the main memory 16 to the buffer memory 40, upon elapse of a very short period of time, i.e., when the buffer memory 40 becomes fully of data, the speaker 28 starts outputting sounds of 2560 words without interruption.

Since the DMAC 44 has a data transfer capacity of 32 words per cycle from the main memory 16 to the buffer memory 40, a total of (2560 words/32 words = 80) data transfer cycles are carried out to transfer 2560 words.

First, the host CPU 14 performs a preparatory process for data transfer in step S1. In the preparatory process, the host CPU 14 reads 2560 words of data {music sound data

(sound data)}, from which batches of 256 words are to be successively transferred via the sound processor 24 alternately to the buffer memories 41, 42, from the secondary storage device 20, and transfers the 2560 words to the main memory 16 where they are written in a predetermined order.

The data read from the secondary storage device 20 include data stored in the secondary storage device 20 in advance or data supplied from the public circuit system 23 via the network interface 22 to the secondary storage device 20.

For writing the data from the secondary storage device 20 into the main memory 16, as shown in FIG. 3, data Dn to be transferred to the buffer memories 41, 42 are divided into 10 batches each of 256 words (Dn = D1, D2, ···, D10), and these batches of data are written as data Dα successively into leading addresses A1 - A10 of the main memory 16 in the order in which they are transferred.

Alternatively, as shown in FIG. 4, data Dn to be transferred to the buffer memories 41, 42 are written in the main memory 16 as sequential data Dβ in respective channels together with a reference tag 50 (see FIG. 5) storing leading addresses indicative of the order in which the data are transferred.

More specifically, according to a transfer order format shown in FIG. 3, data D1 of 256 words are stored in an address A1, data D2 of 256 words are stored in an address A2, successive data are stored in successive addresses, and finally data D10 of 256 words are stored in an address A10.

In this manner, the data Dα are written in the main memory 16 in the order in which they are transferred (in FIG. 3, the data are transferred in the order 1 - 5).

According to a reference tag format shown in FIGS. 4 and 5, data Da1 - Da5, Db1 - Db5 each of 256 words that are sequential for the channels 41, 42 are written respectively in memory addresses A1 - A10, and an order for reading the data Da1 - Da5, Db1 - Db5 {leading addresses (data) A1, A6, A2, ···, A5, A10} is written in the reference tag 50 in advance.

In this manner, the data which are to be transferred from the DMAC 44 via the sound processor 24 to the buffer memory 40 for being outputted as music sounds (voice sounds) from the speaker 28 are stored in a desired format, i.e., the transfer order format or the reference tag format, in the main memory 16.

After the above preparatory process, the host CPU 14 indicates a transfer start address, i.e., the address A1 and a full transfer data size, i.e., 2560 words, to the DMAC 44, and sets the number of data transfer cycles, i.e., (32 words × 8 = 256 words) × 10 = 80, in the DMAC 44 in step S2.

In step S3, the host CPU 14 instructs the sound processor 24 to reproduce the data stored in the main memory 16.

An automatic DMA transfer process carried out by the DMAC 44 in step S4 will be described in detail with reference to FIG. 6.

FIG. 6 shows the automatic DMA transfer process which

is divided into an operation sequence, shown on the right side, carried out by the sound processor 24 and an operation sequence, shown on the left side, carried out by the DMAC 44.

In the automatic DMA transfer process, the CPU 24a of the sound processor 24 sends a data request to the DMAC 44 in step S4a.

In response to the data request, the DMAC 44 confirms a remaining data transfer size from the present number of data transfer cycles in step S4b. Since no data transfer has started yet, the number of data transfer cycles is 80.

In step S4c, the DMAC 44 sends a bus request signal to request the host CPU 14 to give a permission to use the bus 12 exclusively.

In response to the bus request signal, the host CPU 14 temporarily stops the present process as if it is interrupted, saves register data, etc., and thereafter sends a bus request acknowledgment permitting the exclusive use of the bus 12 to the DMAC 44. The bus 12 is now brought into a high-impedance floating state by the host CPU 14.

The DMAC 44 which has received the bus request acknowledgment in step S4d sends a data request acknowledgment for the data request issued in step S4a to the sound processor 24 in step S4e.

In response to the data request acknowledgment, the sound processor 24 specifies either one of the buffer memories 41, 42 to which data are to be transferred, i.e.,

specifies the buffer memory 41 which has been set to receive transferred data at first, in step S4f. In step S4g, the sound processor 24 sends a data transfer reception approval to the DMAC 44.

In step S4h, the DMAC 44 starts transferring first 256 words of data (the data D1 shown in FIG. 3 or the data Da1 shown in FIG. 4) stored in the address A1 to the sound processor 24.

If the data stored in the main memory 16 comprise the data Dα arranged in the data transfer order as with the data Dn shown in FIG. 3, then the first 32 words of data, of 256 words of data D1 from the address A1, are transferred.

Alternatively, if the reference tag 50 and the sequential data Dβ are stored in the main memory 16 as shown FIGS. 4 and 5, then the reference tag 50 is referred to, and first 32 words of data, of 256 words of data Da1 from the address A1, are transferred.

When the transfer of the first 32 words of data to the sound processor 24 is finished, the DMAC 44 sends a bus request cancellation signal to the host CPU 14 in step S4ha.

In response to the bus request cancellation signal, the host CPU 14 transfers the right to use the bus 12 to itself.

In step S4hb, the DMAC 44 changes the number of data transfer cycles from 80 to 79 (the number of data transfer cycles - 1).

When the first 32 words of data have been transferred to the sound processor 24, the sound processor 24 writes the

transferred 32 words of data in an address AS0 of the buffer memory 41 in step S4i.

In step S4j, the sound processor 24 confirms whether the buffer memory 41 which is presently writing data therein is full of data or not, i.e., whether the buffer memory 41 stores 256 words of data or not.

Since the buffer memory 41 is not full of data at the present time, control goes back to step S4a, and the sound processor 24 sends a data request for next 32 words of data to the DMAC 44.

As described above, the DMAC 44 confirms a remaining data transfer size from the present number of data transfer cycles in step S4b. Because the number of data transfer cycles is 79 at this time, the DMAC 44 sends a bus request signal to the host CPU 14 in step S4c and confirms a bus request acknowledgment in step S4d. In step S4e, the DMAC 44 sends a data request acknowledgment for the data request issued in step S4a to the sound processor 24.

In step S4f, the sound processor 24 specifies a buffer memory to which data are to be transferred. At this time, since the first 256 words of data are still being transferred and the buffer memory 41 remains to be specified, the sound processor 24 sends a data transfer reception approval to the DMAC 44.

In step S4h, the DMAC 44 transfers next 32 words of data from the data D1, if the data Dα are transferred, or next 32 words of data from the data Da1, if the data Dβ are

transferred, to the sound processor 24.

In step S4i, the sound processor 24 writes the transferred 32 words of data in an address next to the address where the 32 words of data have already been stored in the buffer memory 41.

When the processing in step S4a - step S4j has been repeated 8 times, the buffer memory 41, which is a storage area having the leading address AS0 of the buffer memory 40, stores 256 words (32 words × 8) of data under the control of the CPU 24a, as shown in FIG. 7, and is full of the data D1 or Da1. At this time, the next leading address of the buffer memory 40 for data writing is set to AS1.

Then, in step S4k, the CPU 24a confirms whether the reproduction of the data in the buffer memory 42 under the control of the CPU 24b is finished or not, i.e., whether the other buffer memory 42 is empty or not.

At this time, no data reproduction has started yet, and the other buffer memory 42 is empty.

When the sound processor 24 confirms that the other buffer memory 42 is empty, the sound processor 24 switches between a data transfer memory (data writing memory) and a data reproduction memory (data reading memory) in step S4l.

Specifically, the sound processor 24 changes the buffer memory 41 from a memory to write data in to a memory to read data from, and also changes the buffer memory 42 from a memory to read data from to a memory to write data in.

After the memory switching, the CPU 24a starts repro-

ducing (reading) the data from the memory 41 in step S4m. Specifically, the CPU 24a successively reads data from the address AS0 of the buffer memory 41, and sends the data via the interface 26 to the speaker 28, which reproduces voice sounds (music sounds).

While music sounds are being reproduced by the speaker 28 under the control of the CPU 24a, the CPU 24b sends a data request again to the DMAC 44 in step S4a.

When the processing in step S4a - step S4j has been repeated 8 times, data D2 of 256 words from the address A2, of the data Dα shown in FIG. 3, or data Db1 of 256 words from the address A6 shown in FIG. 4, are stored in the buffer memory 42 from the address AS1 as shown in FIG. 8, whereupon the buffer memory 42 becomes full of the data.

The data are written into the buffer memory 42 by the CPU 24b more quickly than the data are read from the buffer memory 41 by the CPU 24a such that data remain in the buffer memory 41 while it is being read when the buffer memory 42 becomes full of the data, as shown in FIG. 8.

Therefore, the CPU 24b that has operated to write the data into the buffer memory 42 is placed in the wait state at the time the condition in step S4j is satisfied.

If the reproduction of music sounds based on the data read from the buffer memory 41 is finished in step S4k, the sound processor 24 switches between the data transfer memory (data writing memory) and the data reproduction memory (data reading memory) in step S41. The buffer memory 42 which has

been made full of data now becomes the data reproduction memory, and the CPU 24b reads and reproduces the data from the buffer memory 42. At this time, the buffer memory 41 serves as the data transfer memory.

When the sound processor 24 sends an 81st data request to the DMAC 44, the DMAC 44 determines that all the data Dα or Dβ have been eliminated (no remaining data exists) in step S4b, and then issues an interrupt signal to end transferring the 2560 words of data to the host CPU 14 in step S4n.

In step S5 shown in FIG. 2, the host CPU 14 then performs a data transfer end process for erasing the data Dα or Dβ from the main memory 16 and also erasing the reference tag 50 from the main memory 16.

In the above embodiment, as described above, when 2560 words of data are transferred from the host CPU 14 to the sound processor 24, the interrupt to end data transfer, i.e., the processing in step S4n, occurs only once. Consequently, the processing burden on the host CPU 14 is greatly reduced.

A comparative example of the number of interrupts that occur when 2560 words of data are transferred from the main memory 16 to the buffer memory 40 according to a DMA transfer process, which is not the automatic DMA transfer process, to reproduce music sounds with the sound processor 24 will be described below with reference to FIG. 9.

In the comparative example, the host CPU 14 indicates a

write start address, e.g., the leading address SA0 of the buffer memory 41, to the sound processor 24 in step S11.

In step S12, the host CPU 14 instructs the DMAC 44 to transfer 256 words of data to the sound processor 24.

In step S13, the DMAC 44 transfers 256 words of data to the sound processor 24. At this time, the DMAC 44 sends a bus request signal to request the host CPU 14 and also sends a bus request cancellation signal to the host CPU 14 each time 32 words of data are transferred, i.e., sends 8 bus request signals and 8 bus request cancellation signals while transferring the 256 words of data to the sound processor 24. The transfer of the 256 words of data to write them in the buffer memory 41, i.e., the DMA transfer, is now brought to an end.

When the DMA transfer is ended, the DMAC 44 sends an interrupt signal indicative of the end of the DMA transfer to the host CPU 14 in step S14.

The host CPU 14 now performs an interrupt process.

While and after the 256 words of data are transferred and written in the processing in step S11 to step S13, the sound processor 24 reads the data from the other buffer memory 42, and reproduces music sounds through the speaker 28.

When the reading of the 256 words of data from the other buffer memory 42 is ended, the sound processor 24 sends an interrupt signal indicative of the end of the reading of the 256 words of data to the host CPU 14 in step S15.

The host CPU 14 performs an interrupt process again at

this time.

Thereafter, the host CPU 14 indicates again a write start address, e.g., the leading address SA1 of the buffer memory 42, to the sound processor 24 in step S11.

In the comparative example, as described above, the processing in step S11 - step S14 is repeated ten times until the reproduction of the 2560 words of music sound data with the sound processor 24 is ended.

In the comparative example, accordingly, while the 2560 words of data are being reproduced, a total of 20 interrupts (10 interrupts in step S14 and 10 interrupts in step S15) occur to the host CPU 14.

Therefore, the processing burden on the host CPU 14 for data transfer is very large.

In the data transfer process according to the above embodiment, as described above with reference to FIG. 6, when one of the buffer memories of the double-buffer memory 40 becomes empty, music sound data in the other buffer memory is not transferred according to an interrupt process.

Specifically, as shown in FIG. 10, when music sound data are transferred from the host CPU 14 as a data transfer source, the host CPU 14 and the DMAC 44, as a data transfer source processor, handle a data size of 2560 words which is greater than the storage capacity of 256 words of the buffer memory 41 (42). The sound processor 24, as a data transfer destination processor, temporarily suspends data transfer after music sound data have been transferred to the buffer

memory 41 until it becomes full according to a data transfer process 51. When music sound data in the other buffer memory 42 are reproduced by the sound processor 24 and the buffer memory 42 becomes empty according to a data reproduction transfer process (output transfer process) 54, the sound processor 24 sets the empty buffer memory 42 as a data destination memory. The sound processor 24 then cancels the temporary suspension of data transfer, and resumes a data transfer process 52 to transfer music sound data to the empty buffer memory 42. Since the sound processor 24 switches between the buffer memories 41, 42, the host CPU 14 is not required to perform burdensome interrupt processes, and can carry out the data transfer process uninterruptedly.

In the above embodiment, therefore, after data transfer is instructed, 2560 words of data can be reproduced and transferred between the DMAC 44 and the sound processor 24 by only a handshake process for data requests, and after the transfer of the 2560 words of data is ended, only one interrupt signal to end transferring the 2560 words of data is sent from the DMAC 44 to the host CPU 14.

Consequently, the data transfer process according to the above embodiment is more advantageous than the data transfer process of the comparative example in that the interrupt process performed by the host CPU 14 is reduced to 1/20.

FIG. 11 shows in block form a data recording and reproducing apparatus 10A according to another embodiment of the

present invention, for recording and reproducing stereophonic data as music sound data. Those parts of the data recording and reproducing apparatus 10A which are identical to those of the data recording and reproducing apparatus 10 shown in FIG. 1 are denoted by identical reference characters, and will not be described in detail.

The data recording and reproducing apparatus 10A includes a buffer memory 40A comprising four buffer memories 41L, 41R, 42L, 42R each having a storage capacity of 256 words. The buffer memories 41L, 41R jointly make up a buffer memory 41A, and the buffer memories 42L, 42R jointly make up a buffer memory 42A. The buffer memory 40A thus has two buffer memories 41A, 42A which can alternately be switched for reading and writing data.

To the sound processor 24, there are connected a right speaker 28R and a left speaker 28L as a sound output device via an interface 26. The speakers 28R, 28L are collectively referred to as a speaker 28.

To the sound processor 24, there are also connected a right microphone 32R and a left microphone 32L as a sound input device via an interface 30. The microphones 32R, 32L are collectively referred to as a microphone 32.

Operation of the data recording and reproducing apparatus 10A will be described below with reference to FIGS. 12 and 13 which show a data transfer reproducing process for reproducing stereophonic music sound data.

In step S21 shown in FIG. 13, 256 words of data are

transferred from the main memory 16 to a leading address AS0 (41L) of the buffer memory 41L according to a data transfer process 61. In step S22, 256 words of data are transferred from the main memory 16 to a leading address AS1 (41R) of the buffer memory 41R according to a data transfer process 62.

In a reproducing transfer process 65, the data are simultaneously read from the buffer memory 41L and the buffer memory 41R, and outputted from the speakers 28L, 28R. While in the reproducing transfer process 65, 256 words of data are transferred from the main memory 16 to a leading address AS0 (42L) of the buffer memory 42L according to a data transfer process 63 in step S23, and 256 words of data are transferred from the main memory 16 to a leading address AS1 (42R) of the buffer memory 42R according to a data transfer process 64 in step S24.

After the reproducing transfer process 65 (see FIG. 13), or stated otherwise when the buffer memories 41L, 41R become empty, a next reproducing transfer process 66 begins. In the next reproducing transfer process 66, the data are simultaneously read from the buffer memory 42L and the buffer memory 42R, and outputted from the speakers 28L, 28Rr.

Before the reproducing transfer process 66 ends, 256 words of data are transferred again from the main memory 16 to the leading address AS0 (41L) of the buffer memory 41L according to the data transfer process 61 in step S21, and 256 words of data are transferred again from the main memory

16 to the leading address AS1 (41R) of the buffer memory 41R according to the data transfer process 62 in step S22.

The above processing is repeated to intermittently transfer and continuously reproduce stereophonic music sound data.

FIG. 14 is illustrative of a multi-channel data transfer process in a data transfer order format according to still another embodiment of the present invention. In FIG. 14, data Dαa (data D0 - D11) for a four-channel speaker system (channels L1, R1, L2, R2) which are stored in the main memory 16 are transferred to and continuously reproduced from a buffer memory 40B which comprises buffer memories 141L1, 141R1, 141L2, 141R2 and buffer memories 142L1, 142R1, 142L2, 142R2.

In FIG. 14, data D0, D1, D2, D3, which are first data to be transferred, are transferred from the main memory 16 and written successively into the buffer memories 141L1, 141R1, 141L2, 141R2 according to respective data transfer processes 71, 72, 73, 74 in the order named.

The data D0, D1, D2, D3 are then simultaneously read from the buffer memories 141L1, 141R1, 141L2, 141R2, and outputted as music sounds from four speakers (not shown) according to a data reproduction transfer process.

Before the data reproduction transfer process ends, data D4, D5, D6, D7, which are second data to be transferred, are transferred from the main memory 16 and written successively into the buffer memories 142L1, 142R1, 142L2, 142R2

according to respective data transfer processes 75, 76, 77, 78 in the order named.

When the buffer memories 141L1, 141R1, 141L2, 141R2 from which the data D0, D1, D2, D3 have been simultaneously read become empty, the data D4, D5, D6, D7 are simultaneously read from the buffer memories 142L1, 142R1, 142L2, 142R2, so that the data reproduction transfer process is carried out uninterruptedly.

When the buffer memories 141L1, 141R1, 141L2, 141R2 become empty according to respective data transfer processes 79, 80, 81, 82 in the order named, data D8, D9, D10, D11 are written successively into the empty buffer memories 141L1, 141R1, 141L2.

In this manner, the data can be transferred in a multiplicity of channels.

FIG. 15 illustrates a multi-channel data transfer process in a reference tag format according to yet another embodiment of the present invention. In the multi-channel data transfer process shown in FIG. 15, data similar to the data D0 - D12 shown in FIG. 14 are transferred using a reference tag 50B. In the reference tag format, data Dβα comprising sequential data D0, D4, D8, D12, D1, D5, D9, D13, D2, D6, D10, D14, D3 each of 256 words in channels L1, R1, L2, R2 are written in leading memory addresses A1 - A13 in advance, and the order in which to read the data is written in the reference tag 50B in advance.

In FIG. 15, first through fourth addresses A1, A5, A9,

A13 of the reference tag 50B are referred to, and data D0, D1, D2, D3 are written successively into the buffer memories 141L1, 141R1, 141L2, 141R2 according to data transfer processes 91, 92, 93, 94.

Then, the data D0, D1, D2, D3 are simultaneously read from the buffer memories 141L1, 141R1, 141L2, 141R2, and reproduced.

Before the reproduction of the data D0, D1, D2, D3 is finished, fifth through eighth addresses A2, A6, A10, A14 of the reference tag 50B are referred to, and data D4, D5, D6, D7 are written successively into the buffer memories 142L1, 142R1, 142L2, 142R2 according to data transfer processes 95, 96, 97, 98.

When the simultaneously reading of the data D0, D1, D2, D3 from the buffer memories 141L1, 141R1, 141L2, 141R2 is finished, the data D4, D5, D6, D7 start being simultaneously read from the buffer memories 142L1, 142R1, 142L2, 142R2. At the same time, ninth through twelfth addresses of the reference tag 50B are referred to, and data D8, D9, D10, D11 start being written successively into the buffer memories 141L1, 141R1, 141L2, 141R2.

In this manner, the data can be transferred and reproduced in a multiplicity of channels, using the reference tag 50B.

With respect to the data recording and reproducing apparatus 10, 10B shown in FIGS. 1 and 11, the process of continuously reproducing data from the main memory 16 with the

buffer memory 40 and the speaker 28 has been described. In the data recording and reproducing apparatus 10, 10B, when music sounds are inputted from the microphone 32 or the like as the sound input device or when music sound data are generated by the sound processor 24, 256 words of music sound data may be written into the buffer memory 41, and data may be transferred from the buffer memory 42 more quickly than the 256 words of music sound data are written into the buffer memory 41 according to an automatic DMA transfer process.

The data transfer from the sound processor 24 as the sound music processor to the host CPU 14 will be described in greater detail below. In FIG. 1, before the writing of data into one of the buffer memories 41, 42, e.g., the buffer memory 41, is finished, the sound processor 24 completes the reading of data from the other buffer memory 42 and transfers the read data to the host CPU 14 as the host processor. When the writing of data into the buffer memory 41 is finished, the sound processor 24 starts writing data into the other buffer memory 42 which is now empty. Therefore, the data transfer or the data input from the sound processor 24 to the buffer memory 40, i.e., the buffer memory 41 or the buffer memory 42, is not interrupted.

When data are transferred from the sound processor 24 to the host CPU 14, since the data transfer to the buffer memory 40 is mainly controlled by the sound processor 24, the burden imposed on the host CPU 14 for the transfer proc-

ess is very small.

Actually, as shown in FIG. 17, there is available a memory area 100 capable of storing music sound data corresponding to 14 double-buffer memories 40 each comprising the buffer memories 41, 42 each having a storage capacity of 256 words, i.e., a memory area 100 for 512 words × 14 = 7168 words.

According to an automatic DMA transfer process for transferring data from the sound processor 24 to the host CPU 14, when all of the 14 buffer memories 41, for example, of the double-buffer memories 40 become full of music sound data generated by the sound processor 24, the sound processor 24 sends a data transfer request to the DMAC 44 to continuously write data into the other 14 buffer memories 42.

Each time a data transfer request is received, the DMAC 44 transfers the data in the entire memory area 100 of the buffer memories 40 to the main memory 16. Therefore, since the data being recorded in the 14 buffer memories 42 by the sound processor 24 are simultaneously transferred to the main memory 16, when a data transfer request is issued, the sound processor 24 specifies leading addresses of the buffer memories 41 which have already been full of written data, and issues an interrupt signal to the DMAC 44 for each specified leading address.

In this fashion, the data generated by the sound processor 24 can be transferred to the main memory 16 with a minimum number of interrupts.

According to the present invention, as described above, inasmuch as the data transfer destination processor alternately switches the buffer memories for reading and writing data, the number of interrupts issued to the data transfer source processor can be reduced to lower the burden on the data transfer source processor.

Furthermore, because the music sound processor alternately switches the buffer memories for reading and writing data, the number of interrupts issued to the host processor can be reduced to lower the burden on the host processor.

Moreover, data can be transferred from the music sound processor to the host processor with a minimum number of interrupts.

Although certain preferred embodiments of the present invention have been shown and described in detail, it should be understood that various changes and modifications may be made therein without departing from the scope of the appended claims.

CLAIMS

1. An apparatus for transferring data, comprising:

a data transfer source processor (14);

substantially two buffer memories (41), (42) which can be switched alternately between writing and reading memories; and

a data transfer destination processor (24);

the arrangement being such that when the data transfer source processor sends an instruction to start transfer data to said data transfer destination processor, said data transfer destination processor switches one of said two buffer memories to the writing memory and the other of said two buffer memories to the reading memory, and controls reading of data from and writing of data into said two buffer memories.

2. An apparatus according to claim 1, wherein said data transfer destination processor (24) comprises means for specifying one of the buffer memories which is not the reading memory as the writing memory and sending a data transfer request to said data transfer source processor (14) when the instruction to start transfer data is sent from said data transfer source processor, writing data in the buffer memory specified as the writing memory until the buffer memory becomes full and thereafter waiting until the buffer memory specified as the reading memory becomes empty when the data

are transferred from said data transfer source processor, sending a data transfer request to said data transfer source processor, switching the buffer memories between the reading and writing memories, and controlling reading of data from and writing of data into said buffer memories when the buffer memory specified as the reading memory becomes empty, and continuously controlling reading of data from and writing of data into said buffer memories until an entire size of the transferred data has been written.

3. An apparatus according to claim 1, wherein said data transfer destination processor (24) comprises means for specifying one of the buffer memories which is not the reading memory as the writing memory and sending a data transfer request to said data transfer source processor (14) when the instruction to start transfer data is sent from said data transfer source processor, writing a predetermined size of data in the buffer memory specified as the writing memory and thereafter waiting until the buffer memory specified as the reading memory becomes empty when said predetermined size of data is transferred from said data transfer source processor, sending a data transfer request to said data transfer source processor, switching the buffer memories between the reading and writing memories, and controlling reading of data from and writing of data into said buffer memories when the buffer memory specified as the reading memory becomes empty, and continuously controlling reading

of data from and writing of data into said buffer memories until an entire size of the transferred data has been written.

4. An apparatus according to any one of claims 1 to 3, wherein each of said two buffer memories comprises a plurality of buffer memories (41L), (41R), (42L), (42R).

5. An apparatus according to any one of claims 1 to 4, wherein said data transfer destination processor (24) comprises a music sound processor (24), and the transferred data comprise music sound data.

6. A data transfer system comprising:

a bus (12);

a host processor (14) connected to said bus;

a music sound processor (24) connected to said bus; and

substantially two buffer memories (41), (42) which can be switched alternately between writing and reading memories, said buffer memories being connected to said music sound processor;

the arrangement being such that music sound data are transferred from said host processor via said bus and said music sound processor to said buffer memories;

said music sound processor comprising means for switching one of said two buffer memories to the writing memory and the other of said two buffer memories to the reading

memory, and controlling reading of data from and writing of data into said two buffer memories, when said host processor sends an instruction to start transfer data to said music sound processor.

7. A data transfer system according to claim 6, wherein said music sound processor (24) comprises means for specifying one of the buffer memories which is not the reading memory as the writing memory and sending a data transfer request to said host processor when the instruction to start transfer data is sent from said host processor, writing data in the buffer memory specified as the writing memory until the buffer memory becomes full and thereafter waiting until the buffer memory specified as the reading memory becomes empty when the data are transferred from said host processor, sending a data transfer request to said host processor, switching the buffer memories between the reading and writing memories, and controlling reading of data from and writing of data into said buffer memories when the buffer memory specified as the reading memory becomes empty, and continuously controlling reading of data from and writing of data into said buffer memories until an entire size of the transferred data has been written.

8. A data transfer system according to claim 6, wherein said music sound processor (24) comprises means for specifying one of the buffer memories which is not the reading

memory as the writing memory and sending a data transfer request to said host processor when the instruction to start transfer data is sent from said host processor, writing a predetermined size of data in the buffer memory specified as the writing memory and thereafter waiting until the buffer memory specified as the reading memory becomes empty when said predetermined size of data is transferred from said host processor, sending a data transfer request to said host processor, switching the buffer memories between the reading and writing memories, and controlling reading of data from and writing of data into said buffer memories when the buffer memory specified as the reading memory becomes empty, and continuously controlling reading of data from and writing of data into said buffer memories until an entire size of the transferred data has been written.

9. A data transfer system according to any one of claims 6 to 8, wherein each of said two buffer memories comprises a plurality of buffer memories (41L), (41R), (42L), (42R).

10. A data transfer system according to claim 9, wherein said plurality of buffer memories store left and right stereophonic music sound data.

11. A data transfer system comprising:

a bus (12);

a host processor (14) connected to said bus;

a music sound processor (24) connected to said bus; and

substantially two buffer memories (41), (42) which can be switched alternately between writing and reading memories, said buffer memories being connected to said music sound processor;

the arrangement being such that music sound data are transferred from said music sound via said bus to said host processor;

said music sound processor comprising means for switching one of said two buffer memories to the writing memory and the other of said two buffer memories to the reading memory, and controlling reading of data from and writing of data into said two buffer memories, when data are transferred to said host processor.

12. A data transfer system according to claim 11, wherein said music sound processor (24) comprises means for, before writing of data into one of said buffer memories is finished, completing reading of data from the other buffer memory and transferring the read data to said host processor, and starting to write data in the other buffer memory which is empty when the writing of data into said one of said buffer memories is finished.

13. A method of transferring data in a data transfer system having a bus (12), a host processor (14) connected to

said bus, an output processor (24) connected to said bus, substantially two buffer memories (41), (42) and an output device (28) connected to said output processor, comprising the steps of:

transferring data from said host processor to said output processor until one of said buffer memories becomes full of the data;

thereafter, temporarily suspending transfer of the data;

reading data from the other of said buffer memories with the output processor and outputting the read data from the output processor to said output device;

when the other buffer memory become empty, setting the other buffer memory as a transfer destination memory and canceling temporary suspension of the transfer of data; and

resuming the transfer of the data from said host processor to said other buffer memory.

14. A method according to claim 13, wherein said data comprise music sound data.

FIG. 1

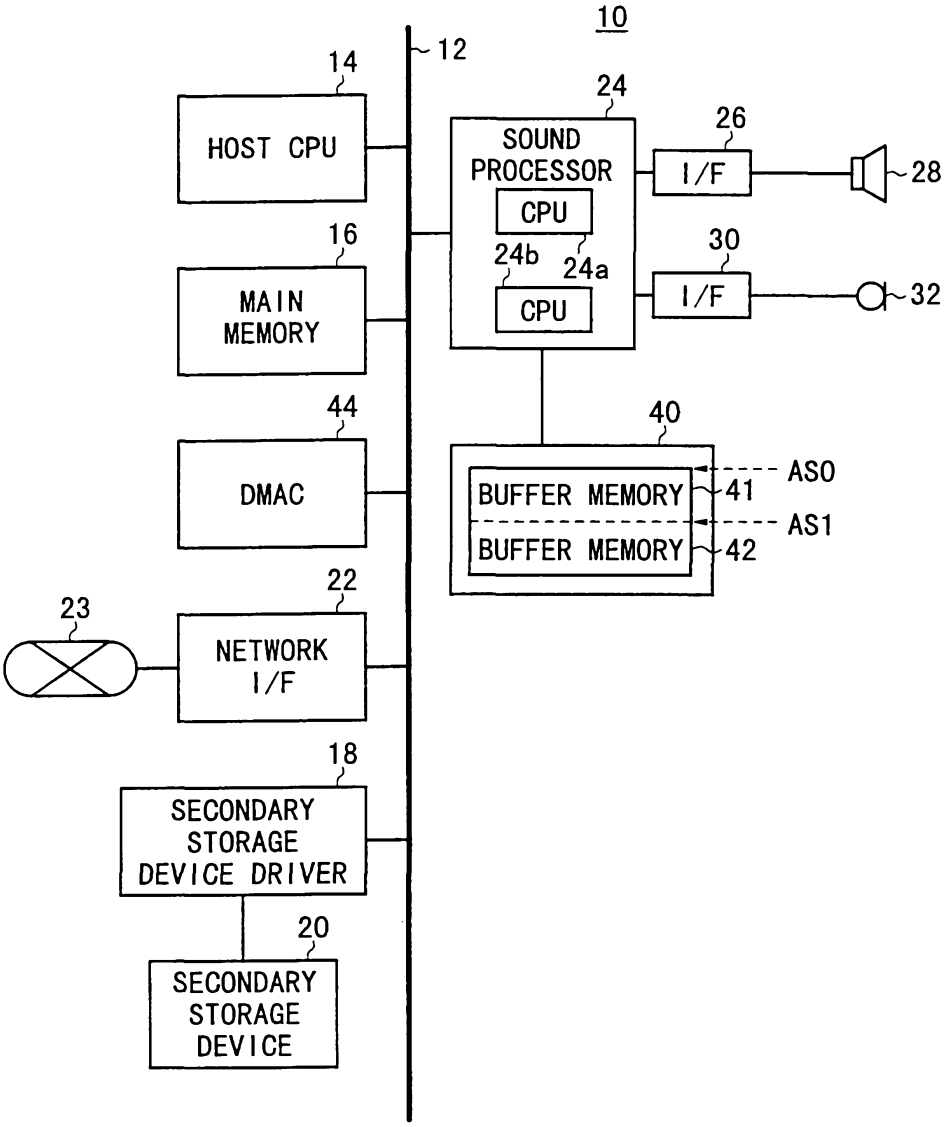
10
12
14
HOST CPU
16
MAIN MEMORY
44
DMAC
22
NETWORK I/F
23
18
SECONDARY STORAGE DEVICE DRIVER
20
SECONDARY STORAGE DEVICE
24
SOUND PROCESSOR
CPU
24b
24a
CPU
26
I/F
28
30
I/F
32
40
BUFFER MEMORY
41
BUFFER MEMORY
42
AS0
AS1

FIG. 2

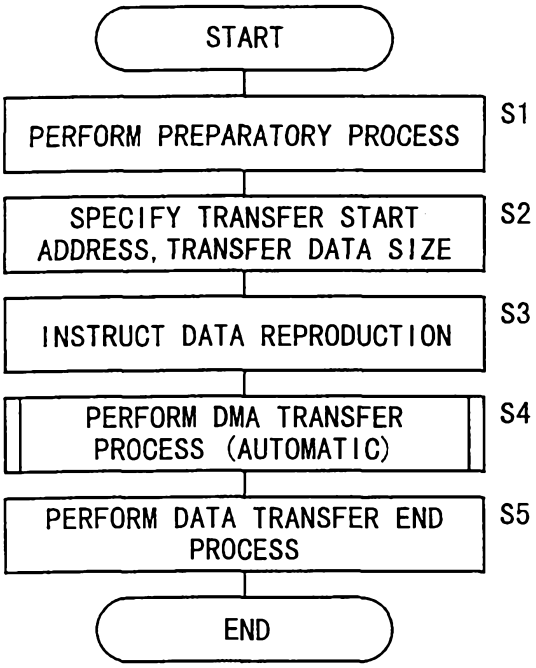
START
PERFORM PREPARATORY PROCESS
S1
SPECIFY TRANSFER START ADDRESS, TRANSFER DATA SIZE
S2
INSTRUCT DATA REPRODUCTION
S3
PERFORM DMA TRANSFER PROCESS (AUTOMATIC)
S4
PERFORM DATA TRANSFER END PROCESS
S5
END

FIG. 3

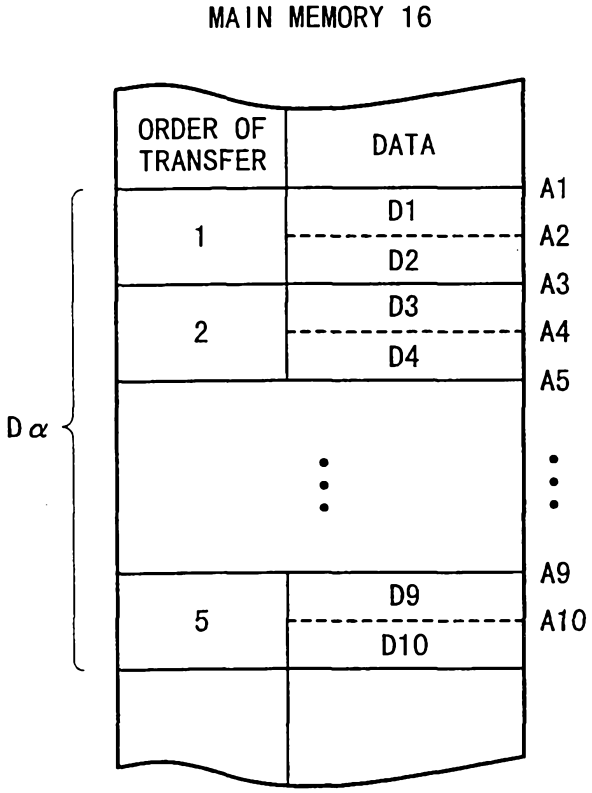
MAIN MEMORY 16
ORDER OF TRANSFER
DATA
A1
1
D1
A2
D2
A3
2
D3
A4
D4
A5
Dα
A9
5
D9
A10
D10

FIG. 4

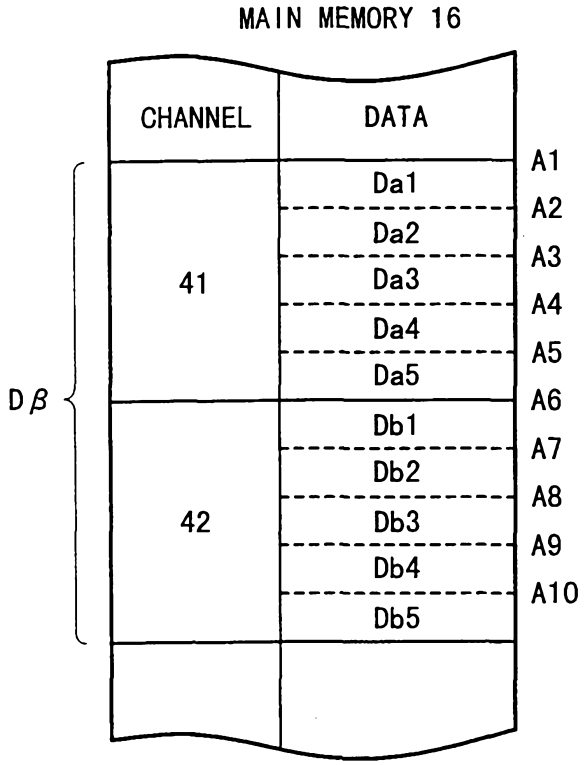
MAIN MEMORY 16
CHANNEL
DATA
41
42
Da1
Da2
Da3
Da4
Da5
Db1
Db2
Db3
Db4
Db5
A1
A2
A3
A4
A5
A6
A7
A8
A9
A10
Dβ

FIG. 5

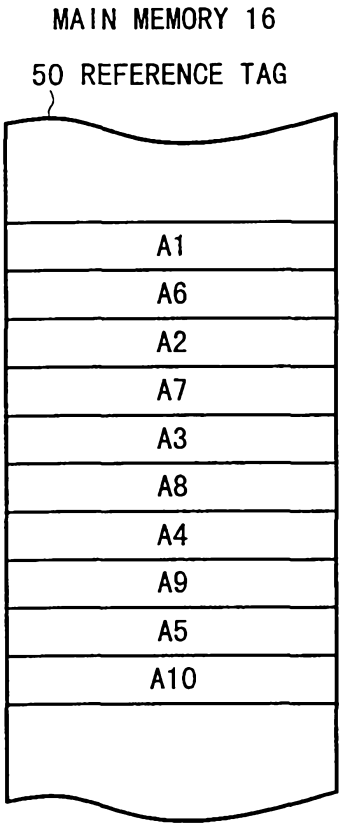

FIG. 6

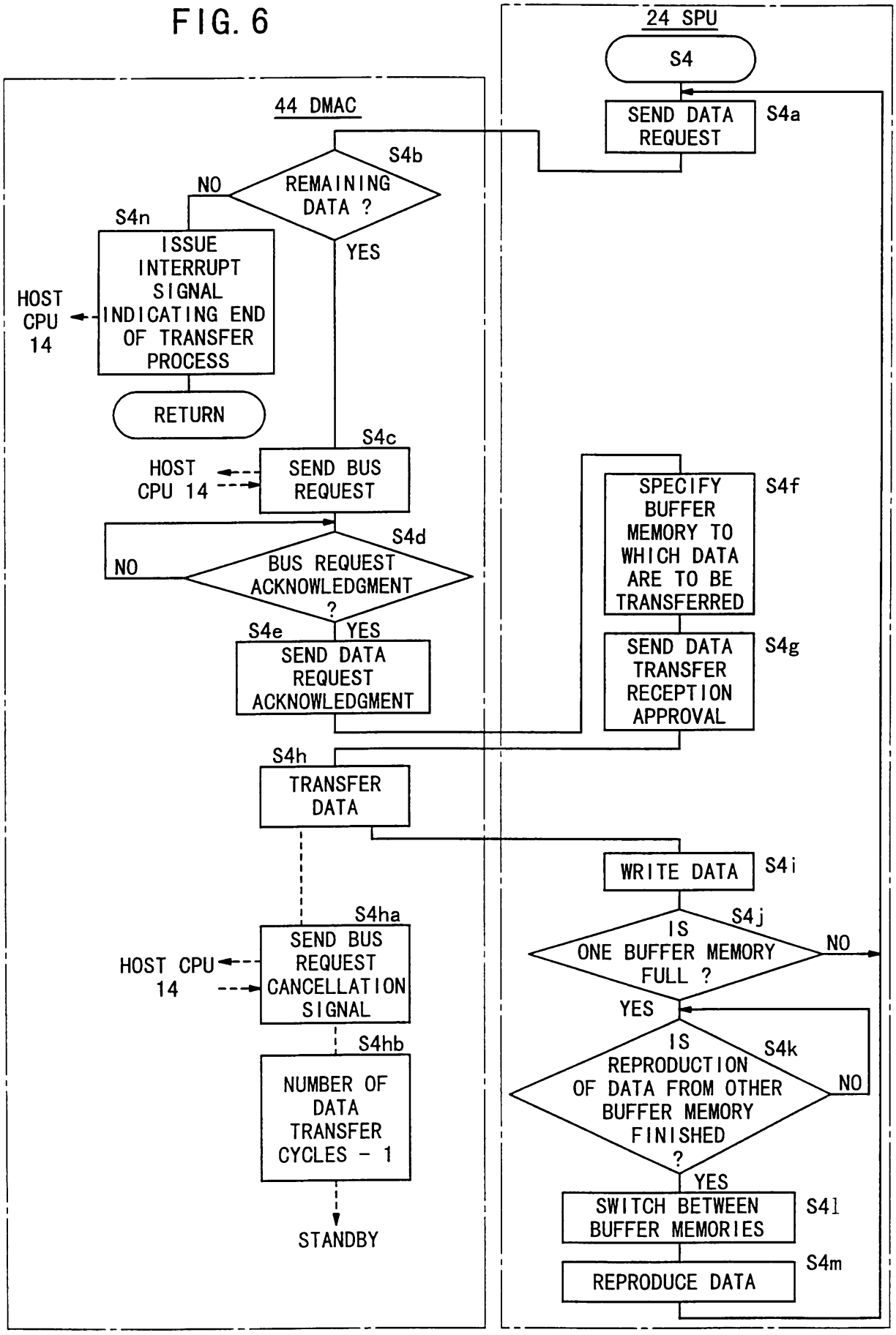
24 SPU
S4
SEND DATA REQUEST
S4a
44 DMAC
S4b
REMAINING DATA ?
NO
YES
S4n
ISSUE INTERRUPT SIGNAL INDICATING END OF TRANSFER PROCESS
HOST CPU 14
RETURN
S4c
HOST CPU 14
SEND BUS REQUEST
S4d
NO
BUS REQUEST ACKNOWLEDGMENT ?
S4e
YES
SEND DATA REQUEST ACKNOWLEDGMENT
SPECIFY BUFFER MEMORY TO WHICH DATA ARE TO BE TRANSFERRED
S4f
SEND DATA TRANSFER RECEPTION APPROVAL
S4g
S4h
TRANSFER DATA
WRITE DATA
S4i
S4j
IS ONE BUFFER MEMORY FULL ?
NO
YES
S4k
IS REPRODUCTION OF DATA FROM OTHER BUFFER MEMORY FINISHED ?
NO
YES
SWITCH BETWEEN BUFFER MEMORIES
S4l
S4m
REPRODUCE DATA
S4ha
HOST CPU 14
SEND BUS REQUEST CANCELLATION SIGNAL
S4hb
NUMBER OF DATA TRANSFER CYCLES - 1
STANDBY

FIG. 7

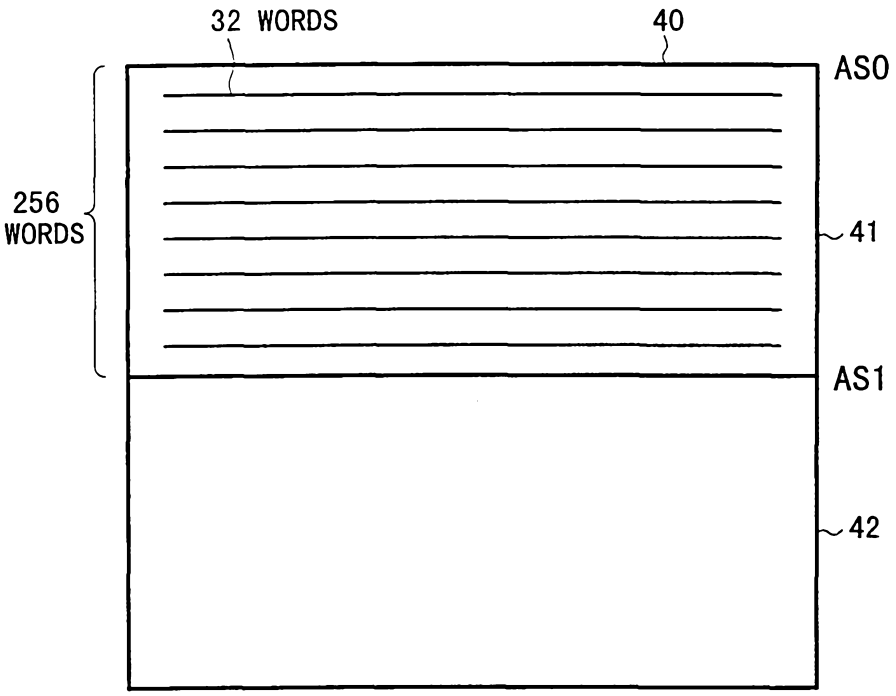

FIG. 8

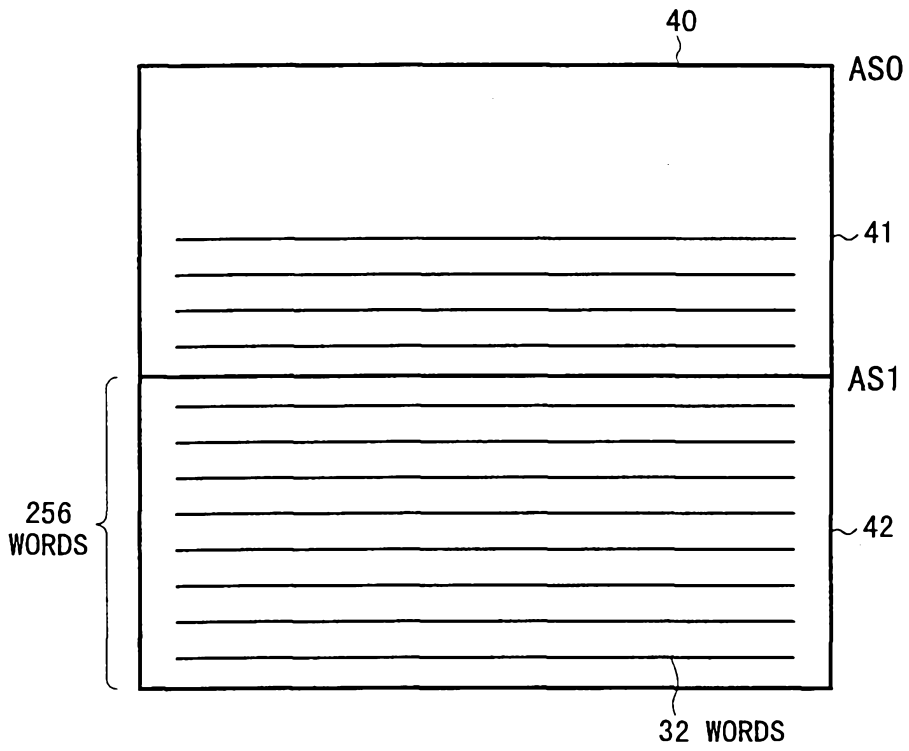

FIG. 9

COMPARATIVE EXAMPLE

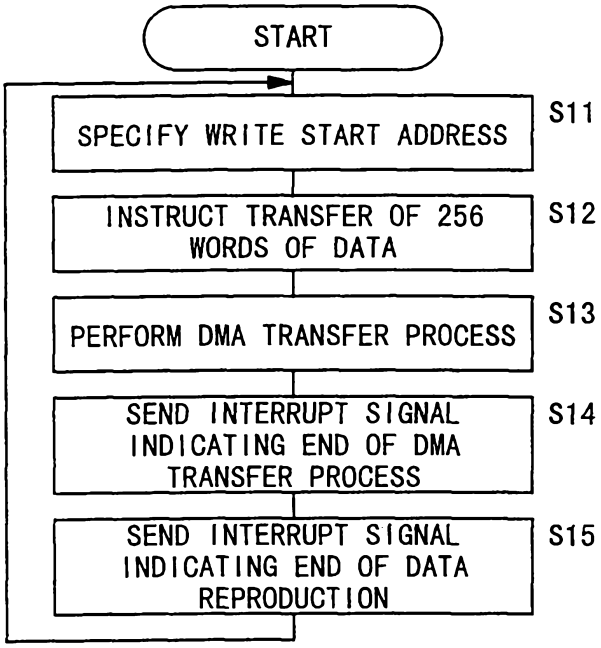

FIG. 10

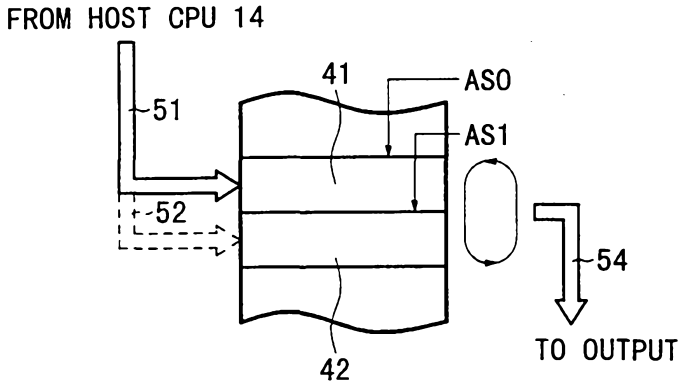

FIG. 11

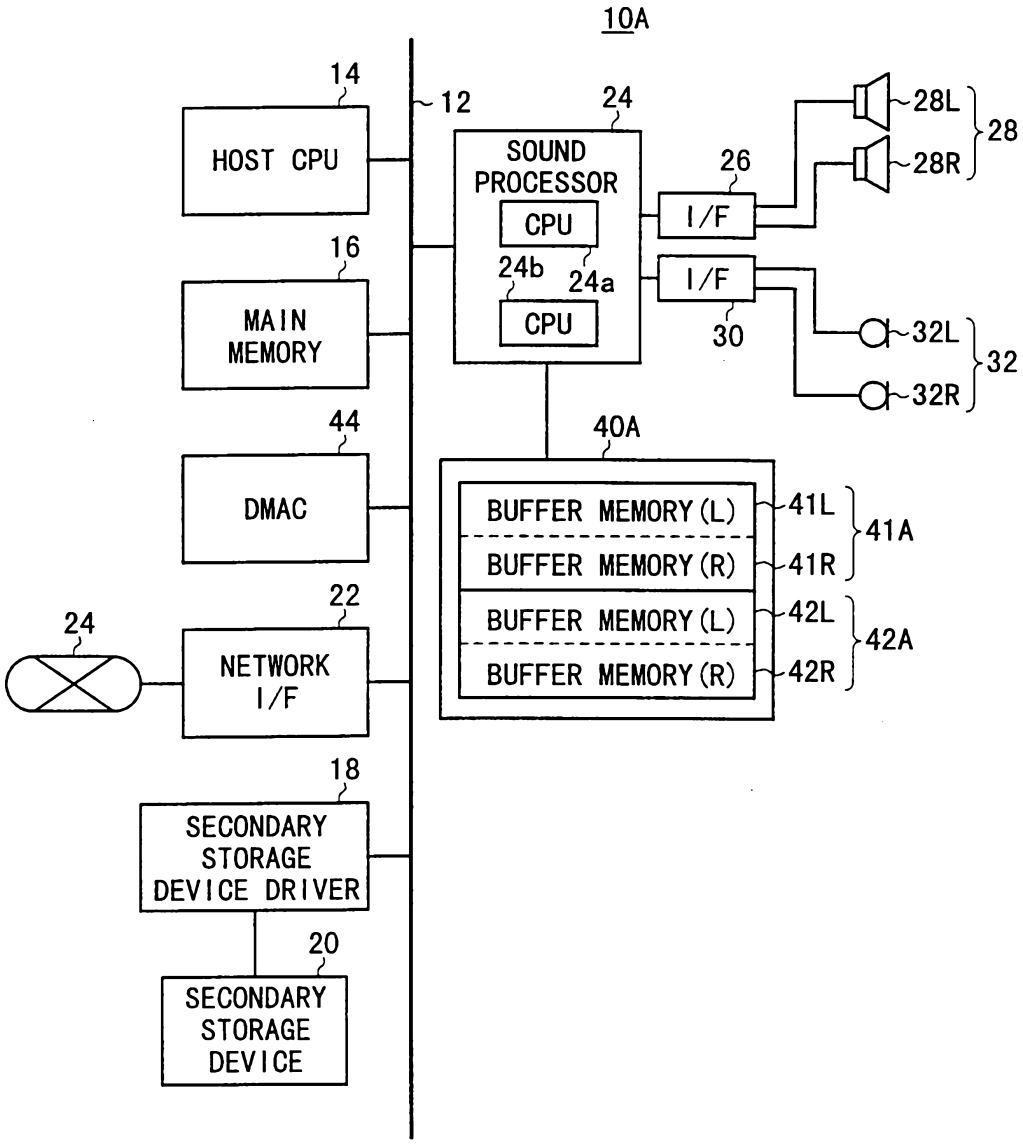
10A
14
HOST CPU
12
24
SOUND PROCESSOR
CPU
24b
24a
CPU
26
I/F
I/F
30
28L
28R
28
32L
32R
32
16
MAIN MEMORY
44
DMAC
40A
BUFFER MEMORY (L)
BUFFER MEMORY (R)
41L
41R
41A
BUFFER MEMORY (L)
BUFFER MEMORY (R)
42L
42R
42A
24
22
NETWORK I/F
18
SECONDARY STORAGE DEVICE DRIVER
20
SECONDARY STORAGE DEVICE

FIG. 12

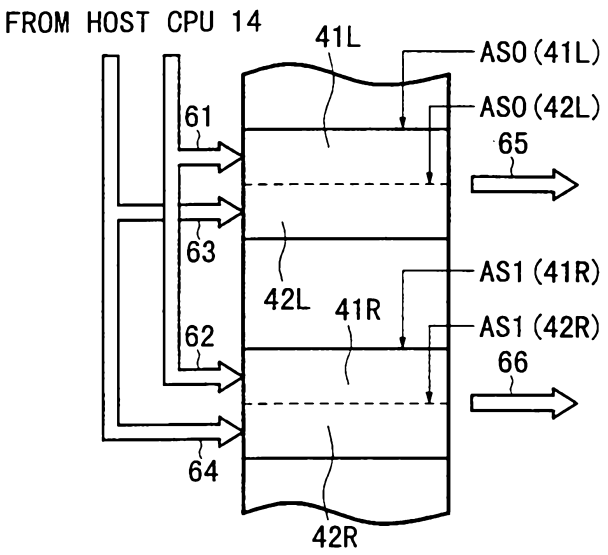
FROM HOST CPU 14
41L
ASO (41L)
ASO (42L)
61
65
63
42L
41R
AS1 (41R)
AS1 (42R)
62
66
64
42R

FIG. 13

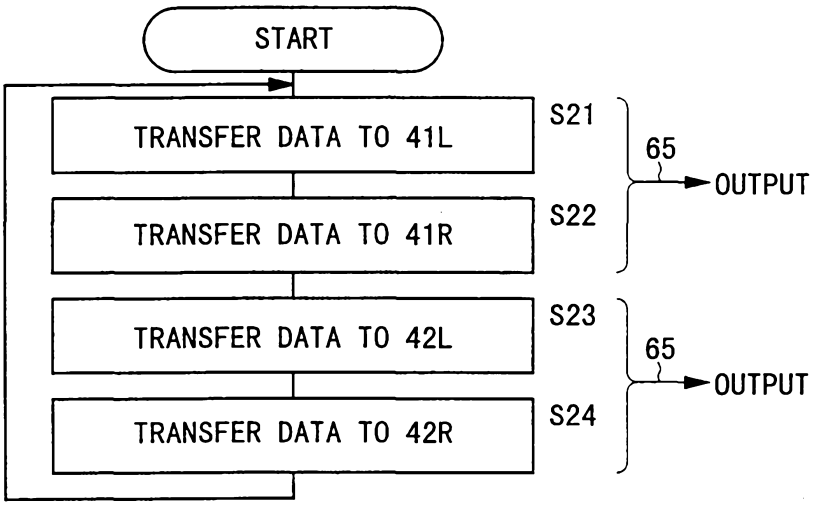
START
TRANSFER DATA TO 41L
S21
TRANSFER DATA TO 41R
S22
65
OUTPUT
TRANSFER DATA TO 42L
S23
TRANSFER DATA TO 42R
S24
65
OUTPUT

FIG. 14

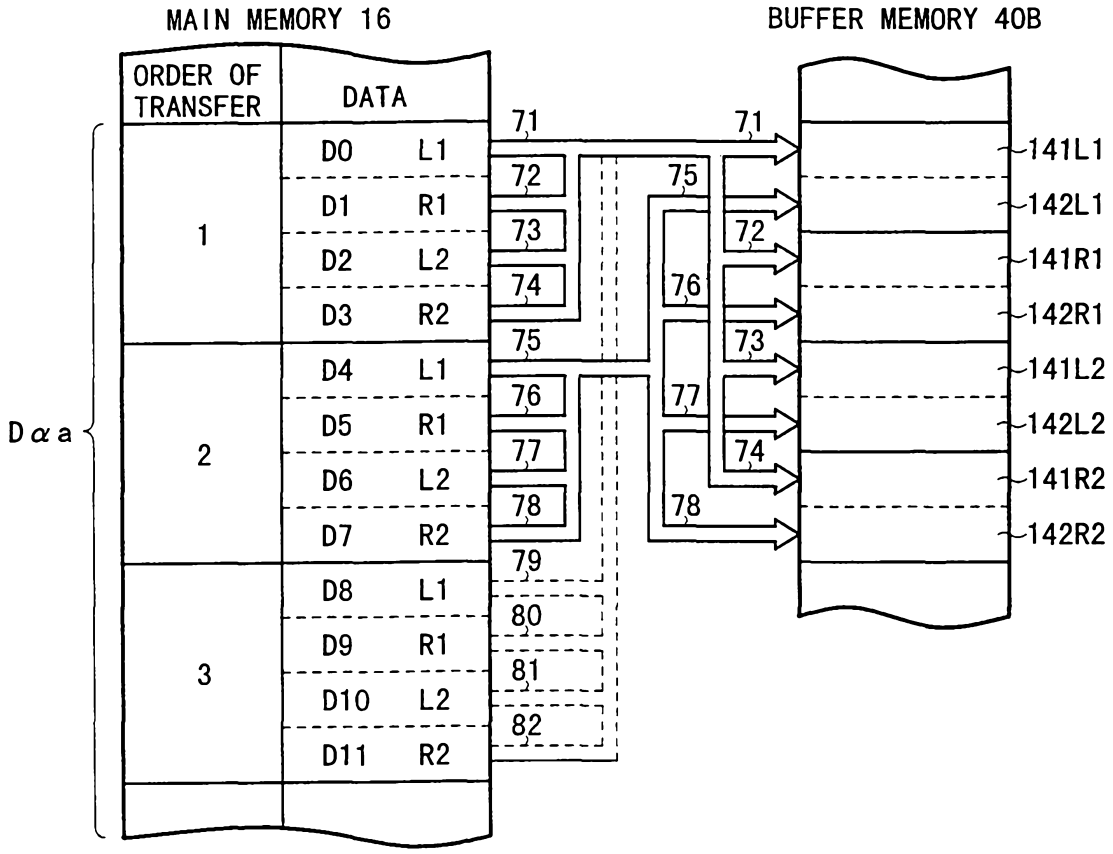
MAIN MEMORY 16
BUFFER MEMORY 40B
ORDER OF TRANSFER
DATA
1
2
3
D0 L1
D1 R1
D2 L2
D3 R2
D4 L1
D5 R1
D6 L2
D7 R2
D8 L1
D9 R1
D10 L2
D11 R2
Dαa
71
72
73
74
75
76
77
78
79
80
81
82
141L1
142L1
141R1
142R1
141L2
142L2
141R2
142R2

FIG. 15

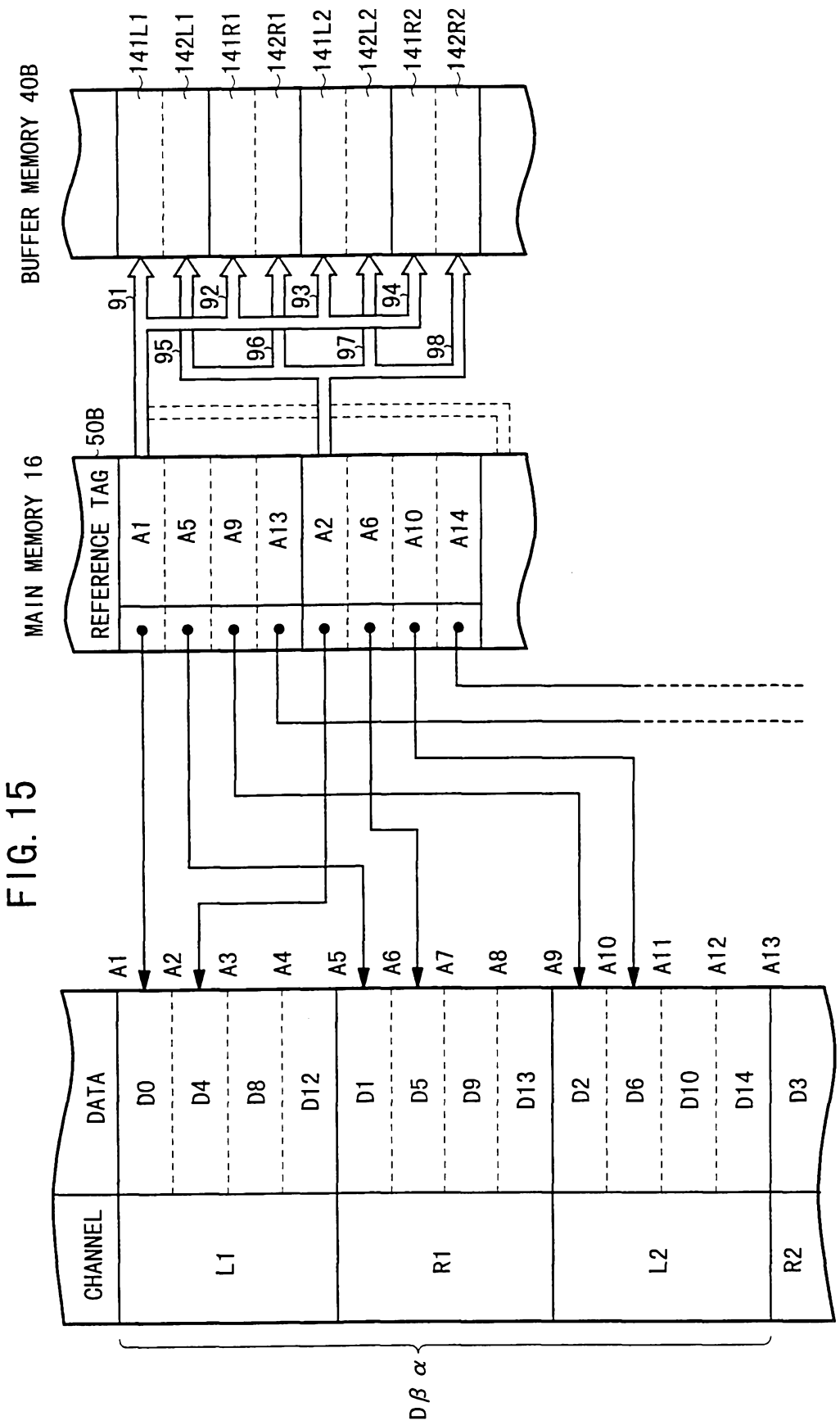
BUFFER MEMORY 40B
141L1
142L1
141R1
142R1
141L2
142L2
141R2
142R2
91
92
93
94
95
96
97
98
MAIN MEMORY 16
50B
REFERENCE TAG
A1
A5
A9
A13
A2
A6
A10
A14
A1
A2
A3
A4
A5
A6
A7
A8
A9
A10
A11
A12
A13
DATA
D0
D4
D8
D12
D1
D5
D9
D13
D2
D6
D10
D14
D3
CHANNEL
L1
R1
L2
R2
D β α

FIG. 16

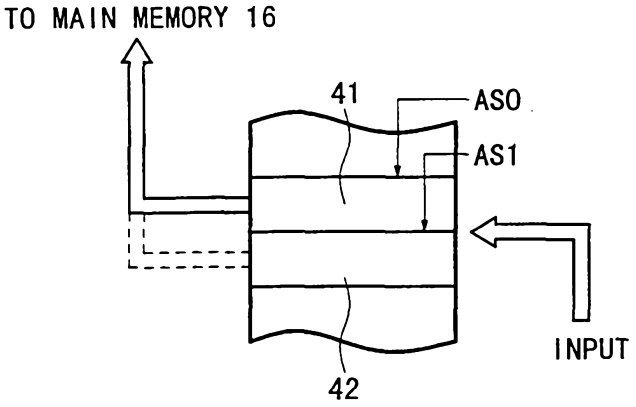

FIG. 17

MUSIC SOUNDS	BUFFER MEMORY 41	BUFFER MEMORY 42	
			~40
1	256 WORDS	256 WORDS	~40
2	256 WORDS	256 WORDS	~40
3	256 WORDS	256 WORDS	~40
4	256 WORDS	256 WORDS	~40
5	256 WORDS	256 WORDS	~40
6	256 WORDS	256 WORDS	~40
7	256 WORDS	256 WORDS	~40
8	256 WORDS	256 WORDS	~40
9	256 WORDS	256 WORDS	~40
10	256 WORDS	256 WORDS	~40
11	256 WORDS	256 WORDS	~40
12	256 WORDS	256 WORDS	~40
13	256 WORDS	256 WORDS	~40
14	256 WORDS	256 WORDS	~40

100