PCT WORLD INTELLECTUAL PROPERTY ORGANIZATION
International Bureau

INTERNATIONAL APPLICATION PUBLISHED UNDER THE PATENT COOPERATION TREATY (PCT)

(51) International Patent Classification 3 : A61F 1/03	A1	**(11) International Publication Number:** WO 83/ 00282 **(43) International Publication Date:** 3 February 1983 (03.02.83)

(21) International Application Number: PCT/US82/01016

(22) International Filing Date: 23 July 1982 (23.07.82)

(31) Priority Application Number: 287,166

(32) Priority Date: 27 July 1981 (27.07.81)

(33) Priority Country: US

(71) Applicant: BATTELLE DEVELOPMENT CORPORATION [US/US]; 505 King Avenue, Columbus, OH 43201 (US).

(72) Inventor: SUMP, Kenneth, Roy ; 2622 West 10th, Kennewick, WA 99336 (US).

(74) Agents: SHAWEKER, Kenneth, E. et al.; Battelle Development Corporation, 505 King Avenue, Columbus, OH 43201 (US).

(81) Designated States: AT (European patent), BE (European patent), CH (European patent), DE (European patent), FR (European patent), GB (European patent), JP, LU (European patent), NL (European patent), SE (European patent).

Published
With international search report.

(54) Title: PRODUCTION OF POROUS COATING ON A PROSTHESIS

(57) Abstract

A method of producing a porous coating (26) on preselected areas of a prosthesis (25) and the resulting implant (10) having a unique porous coating (26). Preselected surface areas are covered by a blend of matching primary metallic particles and expendable particles. The particles are compressed (20) and heated (21) to assure that deformation and metallurgical bonding occurs both between them and at the surface boundaries of the implant element (10). Porosity is achieved by removal of the expandable material (24). The result is a coating (26) including discrete bonded particles separated by a network of interconnected voids presenting a homogeneous porous coating (26) about the substrate (10).

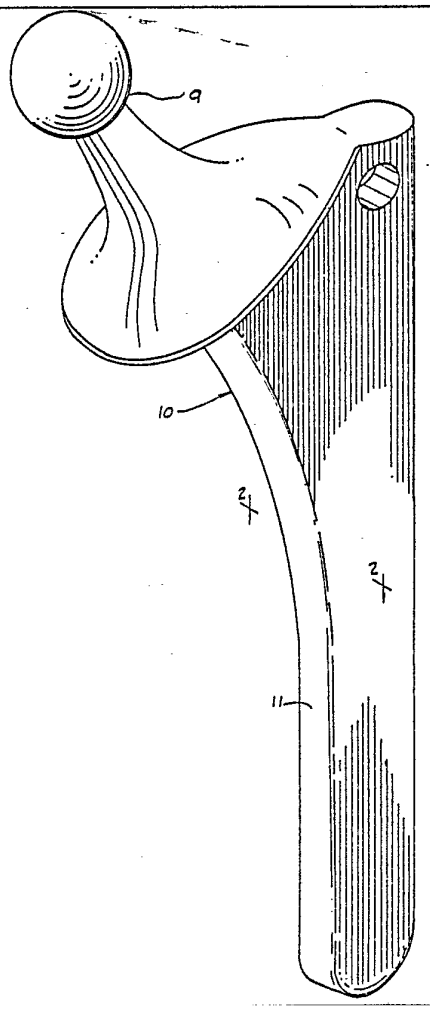

FOR THE PURPOSES OF INFORMATION ONLY

Codes used to identify States party to the PCT on the front pages of pamphlets publishing international applications under the PCT.

AT	Austria	**KR**	Republic of Corea
AU	Australia	**LI**	Liechtenstein
BE	Belgium	**LK**	Sri Lanka
BG	Bulgaria	**LU**	Luxembourg
BR	Brazil	**MC**	Monaco
CF	Central African Republic	**MG**	Madagascar
CG	Congo	**MR**	Mauritania
CH	Switzerland	**MW**	Malawi
CM	Cameroon	**NL**	Netherlands
DE	Germany, Federal Republic of	**NO**	Norway
DK	Denmark	**RO**	Romania
FI	Finland	**SD**	Sudan
FR	France	**SE**	Sweden
GA	Gabon	**SN**	Senegal
GB	United Kingdom	**SU**	Soviet Union
HU	Hungary	**TD**	Chad
JP	Japan	**TG**	Togo
KP	Democratic People's Republic of Korea	**US**	United States of America

Description

Title: Production of Porous Coating on a Prosthesis

Technical Field

This disclosure relates to the coating of preselected metallic surface areas on a prosthesis for subsequent tissue ingrowth applications. The coating is in the form of a porous material having interconnected pores through which hard or soft body tissues can grow.

Background Art

U. S. Patent No. 3,855,638, granted on December 24, 1974 to Robert M. Pilliar discloses a surgical prosthetic device that consists of a solid metallic material substrate with a porous coating over at least a part of its surface. The coating has a thickness between one hundred to one thousand microns. The coating is formed from metallic powder sized between -100 to +325 mesh. The patent discloses production of the coating by using a slurry of metallic powder suspended in an aqueous solution with organic binders. The particle size of the metallic powder and conditions of formation of the porous coating are controlled to provide the desired interstitial pore size, porosity, strength and depth of coating. Both the substrate and powder are sintered to achieve metallurgical bonding between engaged metal particles and between the metal particles and the substrate. The disclosure states it to be essential that the porosity of the surface coating not exceed about 40% and be at least about 10%. It states that at porosities above 40% the overall mechanical strength falls below the required level.

U. S. Patent No. 3,852,045, granted on December 3, 1974 to Kenneth R. Wheeler, Kenneth R. Sump and Manual T. Karagianes, discloses a porous metallic material with interconnected voids, again directed to tissue ingrowth purposes. Voids or pores are produced in the metallic material by use of expendable void formers. The composite material is treated by high energy rate forming pressures to densify its structure prior to removal of the expendable void former. Substantial thicknesses of the coating on substrate metallic elements are disclosed.

BUREAU OMPI WIPO

While the products resulting from the systems taught in U. S. Patent 3,852,045 have performed satisfactorily, the practical application of the system is severely limited by both the expense and availability of equipment for the required high energy rate forming steps. Furthermore, such steps are of questionable value when attempting to produce a relatively thin porous coating on implant elements, since the high pressures to which the elements would be subjected might result in structural damage to them.

According to the present invention, relatively thin porous metallic coatings are produced about selected surface area configurations on a prosthesis by forming the coating about the surface, using a blended mixture of primary and secondary particles. The primary particles are either made from a material identical to or metallurgically compatible with the metallic surface being coated. The secondary particles are made of an expendable material. Both are heated and pressed in place about the surface to effect metallurgical bonding between engaged primary particles as well as between the surface area and primary particles in contact with it. The expendable material is subsequently removed to achieve controlled porosity throughout the coating.

Disclosure of Invention

The basic method of this invention comprises the steps of covering a preselected metallic surface area of a prosthesis with a blended mixture of primary and secondary particles, reducing the dimensional thickness of the mixture by compressing it against the surface and simultaneously applying heat to form metallurgical bonds between primary particles, and removing the expendable secondary particles to present a homogeneously porous coating on the metallic surface area.

The method of covering the metallic surface area can be accomplished by first loading a mold by positioning the prosthesis with the preselected surface area spaced inward from the mold cavity surfaces. The space between the surface area and the mold cavity surfaces is then filled with a blended mixture of primary particles identical to or metallurgically compatible with the metallic surface area of the bone implant element and secondary particles of expendable material in a packed volume containing random shaped voids between the particles. These steps can be carried out in a gravity mold or

BUREAU OMPI VIPO INTERNATIONAL

can be accomplished in the pressure molding apparatus where subsequent compression of the coating occurs. The blend of particles can be applied within a gravity or compression mold in a dry condition or can first be mixed with a liquid binder to assist in maintaining it in a homogeneous condition. The blend of particles containing a binder can also be applied by other suitable coating processes.

If a time delay is to occur between the covering of the metallic surface and final bonding of the particles, the blend of particles can be initially adhered to the surface by light sinter bonds between primary particles or by curing or drying of the binder, when used.

The particles are next heated, while under pressure, to an elevated temperature at which metallurgical bonding occurs between them due to a combination of heat, pressure, and mechanical deformation. The coating is compressed against the prosthesis while at the elevated temperature to reduce the dimensional thickness of the coating and to reduce the volume percentage of random shaped voids remaining in the coating.

As a final step, the expendable material is removed from the coating, which will then have a surface configuration complementary to the mold. Controlled porosity throughout the coating results from a combination of the interstitial spaces between the primary and secondary particles and the voids that remain after removal of the expendable secondary particles.

The prosthesis produced according to this disclosure includes a metallic substrate and a coating of randomly dispersed metal particles. The particles are of substantially uniform size and are joined to one another and to the substrate by metallurgical bonds. The outermost particles are compressibly deformed and dimensioned for implant usage. The metal coating particles are separated by a network of interconnected voids having an average size greater than the average size of the metal particles to present a homogenously porous coating about the substrate.

It is an object of this method to achieve controlled pore size and morphology in a porous coating comprising discrete particles joined by metallurgical bonds.

Another object is to provide porosity in the coating in excess of 40%, while achieving successful metallurgical bonding between the particles themselves and between the particles and substrate by a

BUREAU OMPI WIPO

combination of mechanical compression and application of heat under controlled conditions such that a prosthesis will be covered by a coating having adequate strength for practical use in implant applications.

Another object is to combine pressures of a magnitude to effect mechanical deformation and thermal bonding of particles so as to successfully coat implant surfaces with minimum temperature elevation, thereby preserving the metallurgical structure and properties of the substrate through the coating procedure.

Another object of this invention is to provide a practical thin porous coating on metallic surfaces of a prosthesis in a manner which retains the complex surface configurations often required about the surfaces.

Another object is to provide an effective method of controlling final coating density and porosity so as to permit design of the coating structure for tissue ingrowth requirements.

Another object is to produce a coated implant surface by compressive molding techniques in a manner that assures attainment of rigid exterior tolerances without requiring machining of the coated surfaces.

Finally, an object of the invention is to develop a practical process and product by use of available techniques, equipment and raw materials.

Description of the Drawings

Fig. 1 is a perspective view of an implant element having porous coated surfaces;

Fig. 2 is an enlarged fragmentary transverse sectional view taken substantially along line 2-2 in Fig. 1, with a circled corner area further enlarged for illustration;

Fig. 3 is an illustrative flow diagram illustrating the steps of the present process;

Fig. 4 is a plan photograph showing the outer coating surface after removal of the expendable material;

Fig. 5 is an enlarged (50X) side view of a cross-sectional slice through the coating and substrate in Fig. 4;

BUREAU OMPI WIPO INTERNATIONAL

Fig. 6 is an enlarged (100X) side view taken at the center of Fig. 5 after etching out the grain structure of the coating and substrate;

Fig. 7 is a further enlargement (250X) showing bonding at the substrate surface;

Fig. 8 is a schematic cross-sectional view illustrating molding of the coating;

Fig. 9 is a partial schematic cross-sectional view of the open compression mold; and

Fig. 10 is a similar view of the closed mold.

Best Mode for Carrying Out the Invention

Figs. 1 and 2 generally illustrate a known configuration of a hip prosthesis 10. The prosthesis 10, which is a relatively common bone implant used in surgical repair of hip joints, includes an elongated shank 11 intended to be inserted axially within a supporting bone structure. It is capped by a ball structure generally shown at 9. In most surgical installations of such a prosthesis, the shank 11 is anchored to the bone structure by bone cements.

As illustrated in Figs. 1 and 2, the outer surfaces of the shank 11 are covered by a porous metallic coating 12 that surrounds an inner solid metal substrate 13. The coating 12 is bonded to the substrate 13, and includes interconnected pores through which soft and hard living tissues can grow after implantation of the prosthesis 10.

The present process is initiated by cleaning and machining of the preselected metallic surface areas upon which the coating is to be formed. Additionally, the particles to be used in the coating must be intimately blended to produce a relatively homogenous mixture of the primary particles of metallic material matching or metallurgically compatible with the surface area and the secondary particles of expendable material. It is preferable, but not required, that the particles of both materials be of identical size. This will result in substantially constant porosity throughout the final coating. It also assures that the maximum number of contacts will occur between each particle and those surrounding it. The particles within both the primary and secondary materials should be restricted to a relatively narrow size range within the limits of 35 mesh (500 microns) and 80 mesh (177 microns); e.g., -60 +70 mesh (210 to 250 microns). These

BUREAU OMPI WIPO INTERNATIONAL

particle sizes have practical application in the development of porous coatings having a thickness of between 500 to 1,000 microns, which would then have a thickness of from three sphere diameters to about six sphere diameters. Obviously, coatings of greater thickness can be produced when desired.

While the use of substantially spherical particles has been found preferable in carrying out this invention, it is contemplated that particles of an irregular shape might also be used for both the primary and secondary materials, so long as their size ranges are generally within the bounds indicated above.

When utilizing a dry blend of particles, the surfaces of prosthesis 10 which are to be coated are next positioned within a precision mold cavity 14 in a gravity sintering mold 15. The preselected metallic surface areas to which the coating is to be affixed must be spaced inwardly from the mold cavity surfaces 14. The spacing between the surfaces will be dependent upon the desired thickness of the final coating, and the amount of coating compression which will be accomplished in subsequent steps described below.

As indicated by arrow 16 in Fig. 3, the blended mixture of primary and secondary particles is fed into the spaces between the stationary mold cavity and the prosthesis. The mold 15 is next subjected to heat within a furnace indicated generally at 17. Furnace 17 is preferably a vacuum furnace, since vacuum pressure during the heating step inhibits oxidation of the metallic alloys. Oxidation can also be minimized or prevented by heating the mold within a suitable inert atmosphere. The temperature of the particles surrounding the prosthesis should be raised to a level at which minimal metallurgical bonding between adjacent particles will be achieved, as well as bonding of the particles to the substrate area. The temperature should be maintained below that at which any adverse reactions will occur with the expendable phase. In the case of prosthetic surfaces and spherical particles made from Ti6Al4V alloy (6% Aluminum, 4% Vanadium, the balance being Titanium) with copper or iron as the expendable phase, the bonding temperature will be maintained below the beta transus temperature for the alloy (for example, 970°C).

As indicated at numeral 18 in Fig. 3, the prosthesis 10 can then be removed from the gravity sintering mold as a "preform" with a coating of the gravity sintered particles formed about it. Were the

BUREAU OMPI WIPO INTERNATIONAL

expendable phase material to be removed at this stage of product manufacture, the resulting porous coating provided by the remaining spheres would have inadequate strength for surgical implant purposes.

To assure adequate strength properties, deformation pressures are applied between the metallic spheres by pressure molding. This can be achieved by use of any pressure molding apparatus capable of accurately deforming the complex surface areas under controlled conditions to achieve reproducible coatings on the manufactured bone implant elements. While a hot isostatic pressing apparatus might be used, the specific illustration shown in Fig. 3 shows use of mechanical dies having two or more segments for compression of the coating surface areas.

The preform 18 or coated prosthesis is placed within the complementary jaws 20 of a pressing die, with the die cavity surfaces overlying the preselected surface areas of the prosthesis to be coated. The die jaws 20 and prosthesis are then subjected to heat within a furnace 21. Furnace 21 again is either a vacuum furnace or a furnace having a supply of inert gas to minimize or prevent oxidation of the metallic alloys. The temperature of the spherical particles surrounding the prosthesis must again be raised to one at which some metallurgical bonding between adjacent primary particles and between the primary particles and underlying substrate will occur. The prosthesis is simultaneously subjected to surface compression by movement of the jaws 20 as indicated as arrows 22. This compression step should typically reduce the volume of the coating about the prosthesis surfaces by 10% to 30%. This in turn reduces the dimensional thickness of the mixture of particles to the desired final coating thickness. The process is completed by removing the prosthesis from the pressing die. The prosthesis will have the pressed coating of desired metal and expendable material formed about it. This condition of the prosthesis is shown at 23 in Fig. 3. Substantial metallurgical bonds will now exist between the primary coating particles, with some surface deformation both between the spheres of the desired matrix metal and between the preselected metallic surface area of the prosthesis itself and those particles in engagement with it.

The production of the porous coating is completed by chemically removing the expendable phase in a liquid bath shown at 24. The result is the prosthesis shown in Fig. 3 at 25, which now has an

BUREAU OMPI WIPO INTERNATIONAL

accurately controlled porous coating 26 securely formed about the preselected surface areas. Such a coating will permit bone ingrowth after surgical implantation.

The materials used in this process must be selected so as to be compatible with the materials of the prosthesis (capable of metallurgical bonding without adverse effect) and the processing requirements during coating formation. The primary coating material will normally be selected to match the metallic material of the preselected surfaces to be coated on the prosthesis. However, other materials having suitable bonding compatibility, and which are biologically acceptable, might be used in certain instances.

It is anticipated that the expendable particles will normally be metallic. Examples of materials usable for this purpose are particles of copper, iron, steel, or molybdenum. Metals and alloys must be used which can be readily removed after the production of the coating has been completed. Low temperature eutectic reactions with the prosthesis and primary metallic particles should be avoided.

The mechanical deformation pressure that occurs between the primary metal particles hastens development of metallurgical bonds at temperatures substantially lower than those that would be required in the absence of compression. While compressive deformation of the primary metal particles is of primary importance with respect to the strength properties of the final coating, it is to be understood that mechanical deformation can also occur in the expendable particles and at the surface of the substrate.

A significant advantage of this process is the ability to produce an effective porous coating at relatively low temperatures in comparison to usual gravity sintering. This is achieved within reasonably short time spans by combining both mechanical pressure and thermal deformation of particles and substrate to achieve metallurgical bonds. The use of low sintering temperatures is of particular importance when bonding a coating to a substrate which would be modified metallurgically by elevation to higher temperatures.

As an example of a practical blend of particles for coating surfaces made from a titanium alloy (Ti6Al4V), the blend of materials in the gravity sintering step might comprise 45% by volume Ti6Al4V spherical particles and 20% by volume expendable spherical particles. The remaining space between the prosthesis surfaces and the

BUREAU OMPI WIPO INTERNATIONAL

surrounding mold cavity will be void space between the spheres. These voids will equal 35% of the coating volume. After the coating has been compacted, heated and pressed, the volume percentage of Ti6Al4V spheres will be 50%, the volume percentage of expendable spheres will be 22.2%, and the void volume will be reduced to 27.8%. Removal of the expendable material from the resulting coating will produce a final porous coating of approximately 50% density, meaning that the interconnecting pores formed throughout the coating occupy 50% of the total coating volume.

Varying the size and/or percentage of the primary spherical particles with respect to the expendable spherical particles can be utilized as a production control to select the structure and density of the resulting coating on the prosthesis.

Spherical particles are preferred as starting materials for production of the coating, but spherical particle shapes are not essential to practice of the invention. Spherical powders of the required metallic materials are readily available in closely defined size ranges. They are also easily handled and packed with minimum damage and resulting dust. By using spheres of the same diameter for both the primary and expendable materials, one can maximize the theoretical number of contact locations to be expected between adjacent particles. This leads to greater bonding of the primary particles and improved strength in the final coating. However, non-spherical granular or particulate powders of either the primary or expendable material can be utilized when available.

Voids in the final coating are attributable to both the spaces initially occupied by the particles of expendable material (spherical voids) and the spaces between the adjacent particles of both materials (random shaped voids). The number and size of the spherical voids is determined by the number and size of the expendable particles, which are essentially unchanged during compression of the coating. The volume percentage of the random shaped voids is decreased during compression, primarily due to deformation of the primary material particles against one another, against the expendable material particles, against the substrate surface, and against the outer die surfaces.

The method of this invention reduces the void volume in the covering blend of particles, but does not eliminate it. The void

BUREAU OMPI WIPO INTERNATIONAL

volume can be either totally empty or can be partially or completely filled by a binder or other liquid. The maintenance of a void volume assures that the primary particles can remain as discrete particles after deformation and that deformation of the secondary particles will not flow into areas of contact between adjacent primary particles so as to disturb the desired metallurgical bonds being formed between them.

The spherical voids, which are ultimately integrated with random shaped voids as well, are important for tissue ingrowth. They guarantee that the resulting coating will contain interconnected larger irregular voids between the discrete primary particles. The voids will have an average size greater than the average size of the particles, assuming the primary and secondary particles to have initially been essentially identical in size. The interconnection between such voids presents effective pathways for tissue growth.

The random shaped voids guarantee a continuous network of voids in the coating prior to removal of the expendable material. This permits removal of the expendable material through the void network, whether by etching, application of heat, or by any other suitable method. In general at least a 5% void volume will be required in the compressed coating to assure complete removal of the expendable material.

Another important feature of the coating is the fact that its outer surfaces are mechanically deformed against the outer die surfaces within which it is compressed. By utilizing compression dies pressed against fixed stops which define the limits of compression, one can accurately manufacture a coated element having the outer dimensional tolerances required in bone prosthesis applications and similar usages. The compressed outer coating surfaces are free of burrs, rough edges and particle remnants which might be presented after surface machining operations.

In general, a coating having approximately 50% density (50% solid volume, 50% void volume) is desirable for tissue ingrowth applications. The percentage of densification can vary between different surfaces on an element, depending upon their relative orientations and complementary die opening design. For illustration, Figs. 8-10 schematically show compression molding at a cross-section of shank 11 defined by normal surfaces 30 which are perpendicular to the directions in which pressure is applied (arrows 31) by a split die

BUREAU OMPI WIPO INTERNATIONAL

32,33. Surfaces 30 are joined by angular surfaces 35 along the edges of shank 11 which are arranged at an angle of 60° relative to the normal. The following illustration shows the effect of compression. It assumes the use of a split die 32, 33 having a seam 34 midway between and parallel to the normal surfaces, dimensioned to produce a compressed constant depth of coating on all surfaces when closed.

The original coating thickness B about the normal surfaces 30 is 0.0533 inches (1.35 mm). When compressed, the final coating thickness D is 0.040 inches (1.02 mm). The corresponding original coating thickness A about the angular surfaces 35 should be 0.0467 inches (1.186 mm) to achieve the same final coating thickness D in this die configuration. The die spacing C is 0.0267 inches (0.68 mm). The coating material on the normal surfaces 30 will be compressed by 25% and the coating material on the angular surfaces 35 will be compressed by 14.3%.

The original blend of spherical particles coating all surfaces is 40% primary metal (Ti6Al4V), expendable metal 20% (Iron) and 40% voids, by volume. After compression to stops defining the final 0.040 inch coating thickness, the coating at the normal surfaces will comprise 40% primary metal, 20% iron and 15% voids, based on the original volume. The coating at the angular surfaces will also be 40% primary metal and 20% iron, but the voids will be 25.7%, based on the original volume. After removal of the expendable metal, the volume of primary metal content of the coating on the normal and angular surfaces will then comprise 53.5% and 46.7% of total coating volume, respectively.

In tabular form, such densification can be illustrated as follows:

	Packed Blend (% vol)	→	Hot Press	→	Acid Etch	
Normal Surfaces (25% Densification 0.0533 in→0.040 in)	40 Ti6Al4V 20 Fe 40 Void	→	40 20 15 Void	→	40 20 Void 15 Void	= 53.3% solids by vol.
Angular Surfaces (60°) (14.3% Densification 0.0467 in→0.040 in)	40 Ti6Al4V 20 Fe 40 Void	→	40 20 25.7 Void	→	40 20 Void 25.7 Void	= 46.7% solids by vol.

BUREAU OMPI WIPO INTERNATIONAL

In the initial filling of the mold or die cavity, the particles must be closely packed so as to substantially fill its volume without mechanical deformation occurring. This assures the greatest number of particle contacts by each particle in the blend, both primary and expendable. After compression, the volume of coating is substantially reduced by partial elimination of the void volume between adjacent particles as a direct result of the deformation of the primary particles. By compressing the coating to fixed stops, excess pressure can be used, and accurate coating thickness and surface control is assured.

It should be noted that the gravity sintering can be accomplished in the compression die used to ultimately press the coating about the preselected metallic surfaces. While it is convenient to produce a preform in a mold having no seams, the separate production of the preform is not essential to the disclosed process.

As an alternative to initial gravity sintering, either in a separate mold or in the compression die, this step can be totally eliminated by use of a binder in the original blend of particles. An important benefit achieved by using a binder is the fact that the two different types of particles can be uniformly blended with the binder and will not subsequently tend to segregate as they are being placed in the mold or die cavity. Such segregation must be avoided when the particles are dry, making storage and handling of the blended particles more difficult.

Binders are preferably water-based and capable of being heated to approximately 350-500°F (180-270°C) to remove water content and leave a residue layer that bonds the particles together. This remaining material in turn must volatilize at a temperature below the selected sintering temperature for the coating.

Binder materials tested to date include cellulose gum powders, polyvinyl pyrrolidone, hydroxypropyl cellulose, polyethylene glycol, and polyvinyl alcohol. These were used at concentrations between 0.5 g to 8.0 g in 200 cc of water. Other organic binders can be selected for use in blending and handling the particles, and they can be mixed with solvents other than water, so long as the binder is inert relative to the particles.

The amount of binder added to the blend of particles must merely be sufficient to coat their surfaces and prevent their segregation

BUREAU OMPI WIPO INTERNATIONAL

during handling and placement on the substrate. No particular volume relationships are required.

The use of a binder permits one to produce a green, uncompacted coating without compression or sintering. After curing or drying the binder, the particles will be adhered to the prosthesis surfaces and the coated element can be stored or handled as required by production techniques. The binder also facilitates introduction of the homogeneously blended particles directly into the compression dies, assuring uniform distribution of primary and expendable particles about closely restricted areas separating substrate surface and outer die surfaces.

It is also preferable that the mold cavities and dies be produced with sufficient precision as to obviate the need for any finish machining of the coating surfaces. However, should machining steps be required, they would normally be accomplished prior to removal of the expendable phase.

As an example of the removal of the expendable phase, the expendable material discussed in the above example can be chemically removed by immersion in a bath of suitable acid. The finished product would subsequently be treated to a low temperature vacuum outgassing to assure removal of any contaminants and to further promote metallurgical bonding.

EXAMPLE 1

In a specific test of the process which led to this disclosure, a disk of titanium alloy (Ti6Al4V) was coated with a porous cover of microspheres of the same alloy. The coating was approximately 1.25 millimeters thick. The primary microspheres were between -40 and +80 mesh (177-420 microns). The expendable copper microspheres were of an identical size range. A sintered preform was not used. The composite coating was fabricated by hot pressing at 850°C and 2,000 psi in an argon atmosphere. The copper microspheres were removed in dilute nitric acid. The density of the coating was 48% by volume of the theoretical volume of the coating total. Resulting metallography of the sample showed clear evidence of bonding between the titanium alloy microspheres and to the titanium alloy disk.

EXAMPLE 2

In another experiment designed to demonstrate that gravity sintering of microspheres would form a suitable preform for subsequent

BUREAU OMPI WIPO INTERNATIONAL

hot pressing, titanium alloy (Ti6Al4V) microspheres were gravity sintered about a titanium alloy (Ti6Al4V) rod in an aluminum oxide crucible. Sintering was accomplished in vacuum at 1,025°C for one hour. The resulting part evidenced sufficient strength in the coating to serve as a preform. No further processing of this sample was accomplished.

EXAMPLE 3

Tests have been conducted to demonstrate coating of substrate material typically used in hip implants as generally shown in Figures 1 and 2. This comprised a 0.078 in (1.98 mm) thick, circular disk of Ti6Al4V alloy. It had an alpha structure content.

The titanium alloy (Ti6Al4V) spheres used as primary particles for the coating were -60+70 mesh spheres. Iron spheres of the same size range were of C1018 iron, containing 0.20% oxygen by weight and 0.84% manganese, the balance being iron.

A cellulose gum binder in water (3g/200ml) and a similar concentration of polyvinyl alcohol were separately blended with titanium and iron spherical particles and placed at opposite sides of the titanium disk in a hot press die. They were first hot pressed at 900°C at a pressure of 1000 psi for about 1 hour, but this pressure was inadequate to achieve full closure of the die. The assembly was subsequently hot pressed at 900°C at a pressure of 2000 psi for approximately another hour. Complete movement of the dies to a predetermined stop position was accomplished, resulting in the desired densification of the coating.

The disk of titanium alloy had at least two good layers of spherical particles bonded to it. The disk was cut and two quadrants were placed in dilute nitric acid to remove the iron spheres. The total coated sandwich was 0.167 in (4.24 mm) thick. Evaluation was conducted primarily by metallography. Figure 4 shows a top view of one coated surface after removal of the expendable iron spheres. Good distribution of the light-colored remaining discrete particles is evident.

Fig. 5 shows an enlarged side view along one cut surface or edge of the substrate. Some of the bonded spherical particles (light-colored circles) shown in Fig. 5 have a smaller diameter because they were not sliced through their centers. The deformation and relatively wide compressed bonds formed between contacting discrete spherical

BUREAU OMPI WIPO INTERNATIONAL

particles is evident as they form a lattice of connected spheres. The deformation of the boundary layer of spheres against the substrate shown across the lower portion of Fig. 5 in this instance was substantial. Substrate deformation was also evident from the indentations or dimples which remain after removal of the iron spheres. The even compression of the outermost layer of spheres across the top of Fig. 5 shows the compressive effect of the die surface in forming an outer surface of uniform depth and accurate tolerance along a prescribed plane.

Fig. 5 graphically illustrates the desirable interconnected voids (dark areas) between the bonded particles. These can be seen to be an accumulation of the random void spaces or void volume which remain between adjacent titanium spheres, and the larger spaces which include the original positions of the iron spheres plus the random voids which were located about them. It can be readily seen that the result is that the metal particles in the coating are separated from one another by a network of interconnected voids having an average size greater than the average size of the discrete metal particles or spheres in the original blend of spheres introduced into the die.

Fig. 6 is a further enlargement of the central portion of Fig. 5 after etching of the surface. It shows the grain structure of the particles along the dimpled surfaces, and bonding between particles and substrate. Metallurgical bonding is even more evident in Fig. 7.

While the spheres and substrate shown in Figs. 4-7 are each the same alloy, Figs. 6 and 7 illustrate their different granular structures. The substrate remained an alpha worked structure, since bonding of the spheres occurred without raising its temperature above its beta-transus. This is an important aspect of the invention as applied to a prosthesis made from Ti6Al4V alloy. It successfully achieves metallurgical bonding of thin coatings without the high temperatures typically required to achieve similar bonding of this alloy by gravity sintering. The process has been shown to successfully substitute mechanical energy in deforming the spheres to replace part of the thermal energy required for metallurgical bonding. This permits coating to be accomplished at reduced temperatures at which the metallurgical properties of the substrate material are not altered.

The coated implant is uniquely recognizable from the enlarged views of the coating material as illustrated in Figs. 5, 6 and 7. The

BUREAU OMPI WIPO INTERNATIONAL

coating, typically three to six layers thick, includes randomly dispersed discrete metal particles having a substantially uniform size. They are clearly joined to one another and to the substrate by metallurgical bonds. The outermost layer of particles is compressively deformed to present an outer surface of proper dimensions for implant purposes. The particles in the coating are separated by a network of interconnected voids having an average size greater than the average size of the discrete metal particles. The surface areas of the particles which surround the interconnected voids are dimpled.

In compliance with the statute, the invention has been described in language more or less specific as to structural features. It is to be understood, however, that the invention is not limited to the specific features shown, since the means and construction herein disclosed comprise a preferred form of putting the invention into effect. The invention is, therefore, claimed in any of its forms or modifications within the proper scope of the appended claims, appropriately interpreted in accordance with the doctrine of equivalents.

BUREAU OMPI WIPO INTERNATIONAL

Claims

1. A method of producing a porous coating for tissue ingrowth applications on a preselected metallic surface area of a prosthesis, comprising the following steps:

covering the metallic surface area of the prosthesis with a blended mixture of metallurgically compatible primary particles and expendable secondary particles in a packed volume containing a void volume between the particles;

reducing the dimensional thickness of the mixture by compressing it against the metallic surface area to a preselected coating thickness and volume containing a reduced void volume, while simultaneously raising the temperature of the mixture and metallic surface area to an elevated temperature at which metallurgical bonding of the primary particles occurs as a result of a combination of the heat and deformation pressures to which they are subjected; and

removing the expendable secondary particles to present a homogeneously porous coating on the metallic surface area in which discrete bonded primary particles are separated from one another by a network of interconnected voids.

2. The method of claim 1, including the following additional step:

cooling the prosthesis and covering mixture of particles prior to the step of reducing the dimensional thickness of the mixture.

3. The method of claim 1, wherein the step of covering the metallic surface area comprises:

mixing a preselected proportion of primary and secondary particles with a binder in a homogenously blended mixture; and

applying the blended mixture of particles and binder onto the metallic surface area at a dimensional thickness greater than the said preselected coating thickness.

4. The method of claim 1 wherein the step of covering the metallic surface area comprises:

mixing a preselected proportion of primary and secondary particles with a binder in a homogenously blended mixture;

BUREAU OMPI WIPO INTERNATIONAL

applying the blended mixture of particles and binder onto the metallic surface area at a dimensional thickness greater than the said preselected coating thickness; and

curing the binder to secure the blended mixture of primary and secondary particles onto the metallic surface area.

5. The method of claim 1 wherein the blended mixture of primary and secondary particles is maintained in a homogeneous state by adding to it a liquid binder prior to covering the metallic surface area of the prosthesis.

6. The method of claim 1 wherein the metallic surface area of the prosthesis and the primary particles are each composed of Ti6Al4V alloy;

said elevated temperature being below the beta transus temperature for the alloy.

7. A method of producing a porous coating for tissue ingrowth applications on a preselected metallic surface area of a prosthesis, comprising the following steps:

positioning the prosthesis within a mold cavity with the metallic surface area spaced inwardly from the mold cavity surfaces;

filling the space between the metallic surface area and mold cavity surfaces with a blended mixture of primary particles of a material that is metallurgically compatible with the metallic surface area of the prosthesis and secondary particles of an expendable material in a packed volume containing a void volume between the particles;

heating the prosthesis and mixture of particles to an elevated temperature at which metallurgical bonding can occur between adjacent individual primary particles and between the primary particles and the metallic surface area engaged thereby;

simultaneously compressing the mixture of particles against the metallic surface area of the prosthesis while at the elevated temperature to reduce the void volume and the dimensional thickness of the mixture of particles by mechanical deformation between adjacent primary particles and between the primary particles and the metallic surface area engaged thereby and to effect metallurgical bonding of

BUREAU OMPI WIPO INTERNATIONAL

the primary particles as a result of a combination of the heat and deformation pressures to which they are subjected; and

subsequently removing the expendable material from the resulting coating.

8. The method of claim 7 wherein the compressing step reduces the thickness of the coating by 10% to 30%.

9. The method of claim 7 wherein the step of filling the space between the metallic surface area and mold cavity surfaces is accomplished by directing a dry blend of primary and secondary particles between them.

10. The method of claim 7 wherein the step of filling the space between the metallic surface area and mold cavity surfaces is accomplished by directing a dry blend of primary and secondary particles between them; and

bonding the primary particles to one another and to the metallic surface area by gravity sintering prior to simultaneously compressing and heating them to effect metallurgical bonding.

11. The method of claim 7 wherein the step of filling the space between the metallic surface area and mold cavity surfaces is accomplished by directing a blend of primary and secondary particles between them, plus a liquid binder.

12. The method of claim 7 wherein the step of filling the space between the metallic surface area and mold cavity surfaces is accomplished by directing a homogeneously blended mixture of a binder and primary and secondary particles between them.

13. The method of claim 7 wherein the step of filling the space between the metallic surface area and mold cavity surfaces is accomplished by directing a homogeneously blended mixture of a binder and primary and secondary particles between them; and

curing the binder to thereby attach the primary and secondary particles to the metallic surface area prior to simultaneously compressing and heating them to effect metallurgical bonding.

BUREAU OMPI WIPO INTERNATIONAL

14. A method of producing a porous coating for tissue ingrowth applications on a preselected metallic surface area of a prosthesis, comprising the following steps:

positioning the prosthesis within a mold cavity with the preselected surface area spaced inwardly from the mold cavity surfaces by a distance of approximately 0.5 to 1.5 millimeters;

filling the space between the preselected surface area and mold cavity surfaces with a blended mixture of primary spherical particles of an alloy matching the preselected metallic surface area of the prosthesis and secondary spherical particles of expendable metallic material in a packed volume containing a void volume between the particles, the primary and secondary spherical particles having a narrow range of diameters less than 0.5 millimeters;

heating the spherical particles within the mold to an elevated temperature at which metallurgical bonding occurs between the individual primary spherical particles;

simultaneously compressing the primary and secondary spherical particles against the preselected surface area of the prosthesis while at the elevated temperature to reduce the void volume and total volume of the coating and to effect metallurgical bonding of the primary particles as a result of a combination of heat and the deformation pressures to which they are subjected; and

removing the expendable material from the resulting coating.

15. The method of claim 14 wherein the compressing step produces the desired surface configuration on the coating about the preselected surface area of the prosthesis.

16. The method of claim 14 further comprising the step of heating the spherical particles to the sintering temperature of the spherical powders by gravity sintering processes prior to simultaneously compressing and heating the particles at the elevated temperature.

17. The method of claim 14 further comprising the step of heating the spherical particles to the sintering temperature of the primary spherical particles by gravity sintering processes prior to

BUREAU OMPI WIPO INTERNATIONAL

simultaneously compressing and heating the particles at the elevated temperature; and

the compressing step being carried out by hot isostatic pressing or by compression within a multiple-segment die.

18. The method of claim 14 wherein the expendable material is removed by chemical processing.

19. The method of claim 14 wherein the metallic surface area of the prosthesis and the primary particles are each composed of Ti6Al4V alloy;

said elevated temperature being below the beta transus temperature for the alloy.

20. The method of producing a porous coating for tissue ingrowth applications on a preselected metallic surface area of a prosthesis, comprising the following steps:

positioning the prosthesis within a gravity mold cavity with the preselected surface area spaced inwardly from the mold cavity surfaces;

filling the space between the preselected surface area and gravity mold cavity surfaces with a blended mixture of primary spherical particles metallurgically compatible with the metallic surface area of the prosthesis and secondary spherical particles of expendable material in a packed volume containing a void volume between the particles;

heating the spherical particles within the gravity mold cavity to an elevated temperature at which bonding occurs between the individual primary spherical particles and to the metallic surface area;

removing the coated prosthesis from the gravity mold cavity;

positioning the coated prosthesis within a pressure molding apparatus;

heating the spherical particles within the pressure molding apparatus to an elevated temperature at which metallurgical bonding occurs both between the individual primary spherical particles and to the metallic surface area;

simultaneously compressing the coating about the preselected surface area of the prosthesis while at the elevated temperature to reduce the void volume and dimensional thickness of the coating by

BUREAU OMPI WIPO INTERNATIONAL

mechanical deformation and to effect metallurgical bonding of the primary particles as a result of a combination of heat and the deformation pressures to which they are subjected; and

removing the expendable material from the resulting coating.

21. The method of claim 20 wherein the blended mixture of primary and secondary spherical particles is a dry mixture which is sintered to effect minimal metallurgical bonding of the primary particles in the gravity mold cavity.

22. The method of claim 20 wherein the blended mixture of primary and secondary spherical particles contains a liquid binder which is cured to effect bonding and to prevent segregation of the primary and secondary particles in the gravity mold cavity.

23. The method of claim 20 wherein the metallic surface area of the prosthesis and the primary particles are each composed of Ti6Al4V alloy;

said elevated temperature being below the beta transus temperature for the alloy.

24. A prosthesis for tissue ingrowth applications, comprising:

a structural metallic substrate; and

a coating of randomly dispersed discrete metal particles having a substantially uniform size joined to one another and to the substrate by metallurgical bonds, the outermost particles being compressibly deformed to present an outer coating surface of proper dimensions for implant purposes;

the metal particles being separated from one another by a network of interconnected voids having an average size greater than the average size of the discrete metal particles to present a homogeneously porous coating about the substrate.

25. The prosthesis of claim 24 wherein the discrete metal particles are substantially spherical;

both the substrate and particles being composed of a Ti6Al4V alloy, the substrate having an alpha phase content.

BUREAU OMPI WIPO INTERNATIONAL

26. A prosthesis having a porous coating for tissue ingrowth applications on a preselected metallic surface area, wherein the coating is produced by the following method steps:

covering the metallic surface area of the prosthesis with a blended mixture of metallurgically compatible primary particles and expendable secondary particles in a packed volume containing a void volume between particles;

reducing the void volume and dimensional thickness of the mixture by compressing it against the metallic surface area to a preselected coating thickness while simultaneously raising their temperatures to an elevated temperature at which metallurgical bonding of the primary particles occurs as a result of a combination of heat and the deformation pressures to which they are subjected; and

removing the expendable secondary particles to present a homogenously porous coating on the metallic surface area in which discrete bonded primary particles are separated from one another by a network of interconnected voids.

27. A prosthesis having a porous coating for tissue ingrowth applications on a preselected metallic surface area, wherein the coating is produced by the following method steps:

positioning the prosthesis within a mold cavity with the preselected surface area spaced inwardly from the mold cavity surfaces;

filling the space between the preselected surface area and mold cavity surfaces with a blended mixture of primary spherical particles metallurgically compatible with the metallic surface area of the prosthesis and secondary spherical particles of an expendable material;

heating the prosthesis and mixture of particles within the mold to an elevated temperature at which metallurgical bonding occurs between adjacent individual primary particles and between the primary particles and the metallic surface area engaged thereby;

simultaneously compressing the mixture of particles against the preselected surface area of the prosthesis while at the elevated temperature to reduce the dimensional thickness of the mixture of particles by mechanical deformation between adjacent primary particles and between the primary particles and the metallic surface area engaged thereby and to effect metallurgical bonding of the primary

BUREAU OMPI WIPO INTERNATIONAL

particles as a result of a combination of heat and the deformation pressures to which they are subjected; and

subsequently removing the expendable material from the resulting coating.

28. The prosthesis of claim 27 wherein the metallic surface area of the prosthesis and the primary particles are each composed of Ti6Al4V alloy;

said elevated temperature being below the beta transus temperature for the alloy.

BUREAU OMPI WIPO INTERNATIONAL

FIG 1

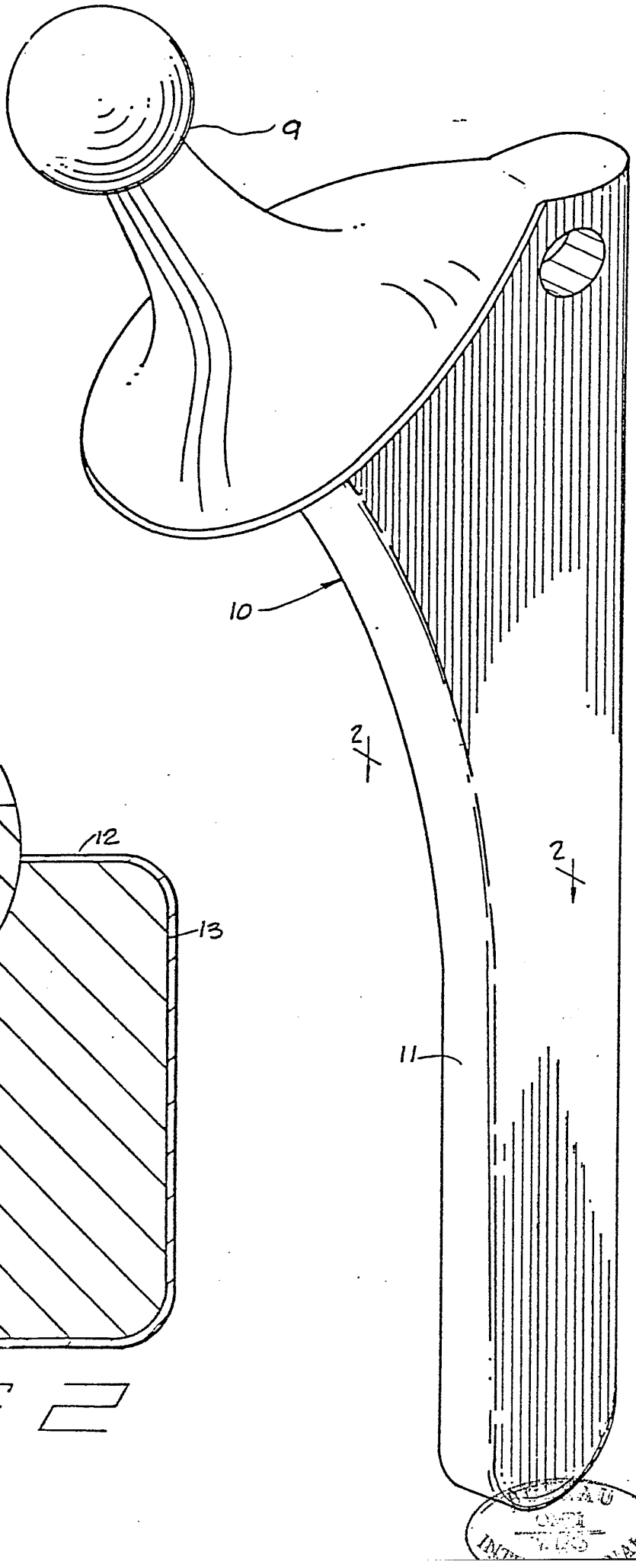

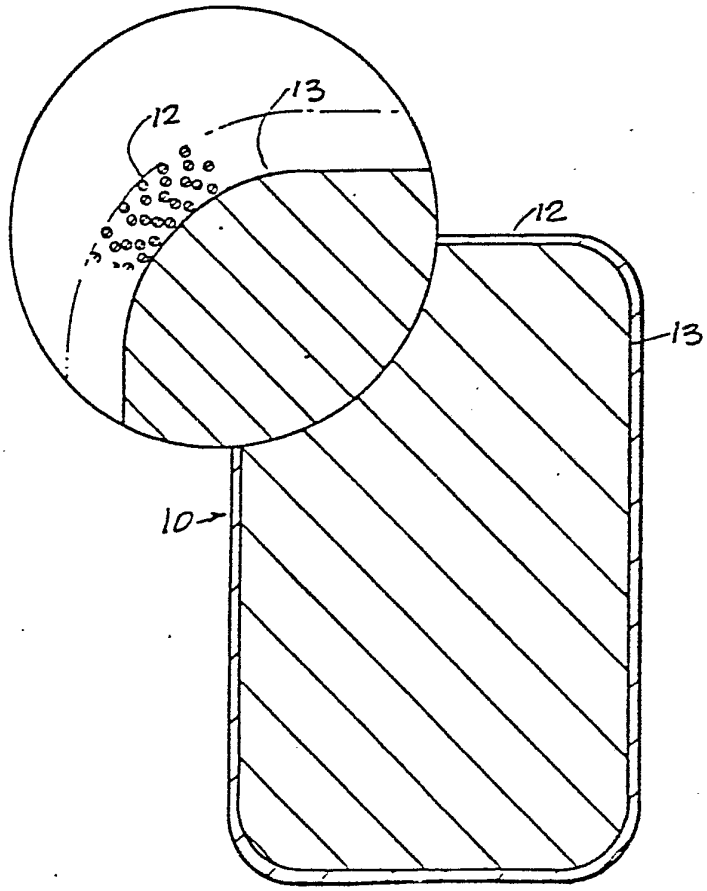

FIG 2

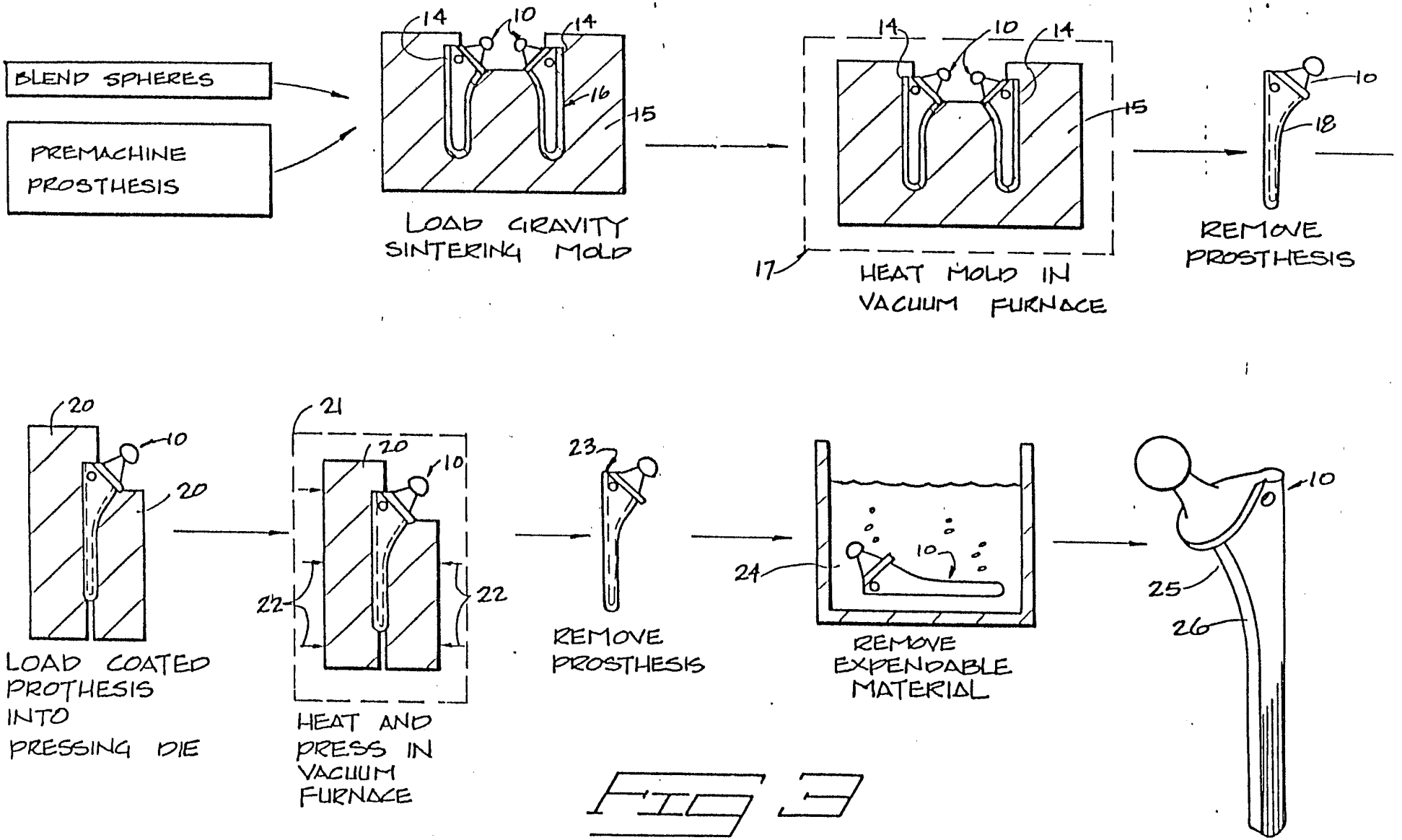

FIG 3

BUREAU OMPI

Fig 4

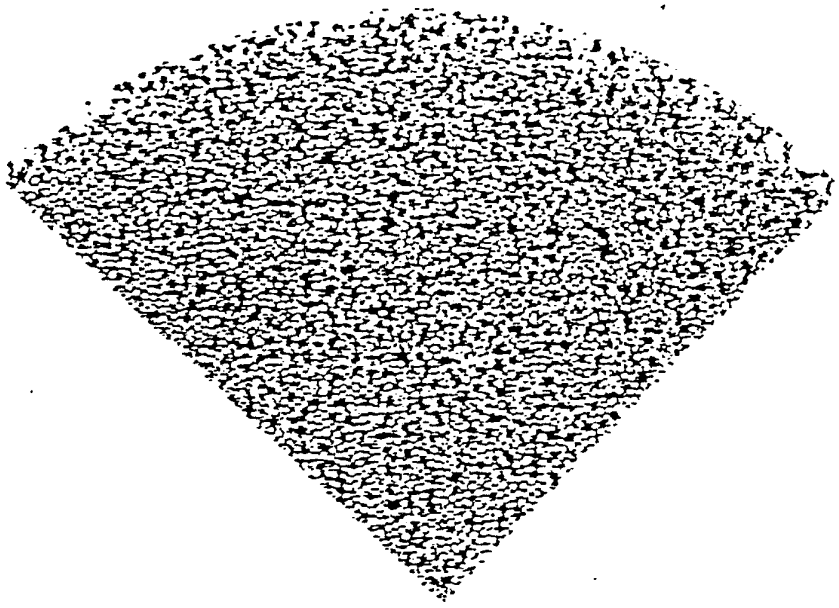

Fig 5

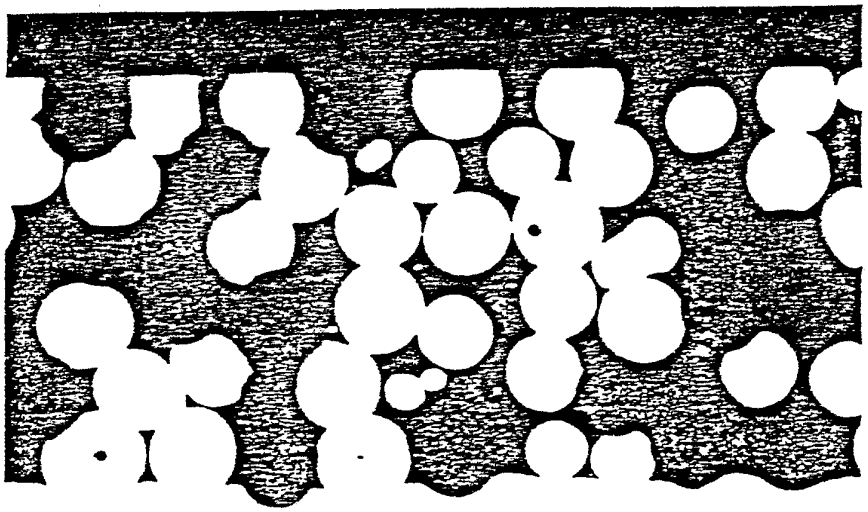

BUREAU OMPI WIPO INTERNATIONAL

FIG 6

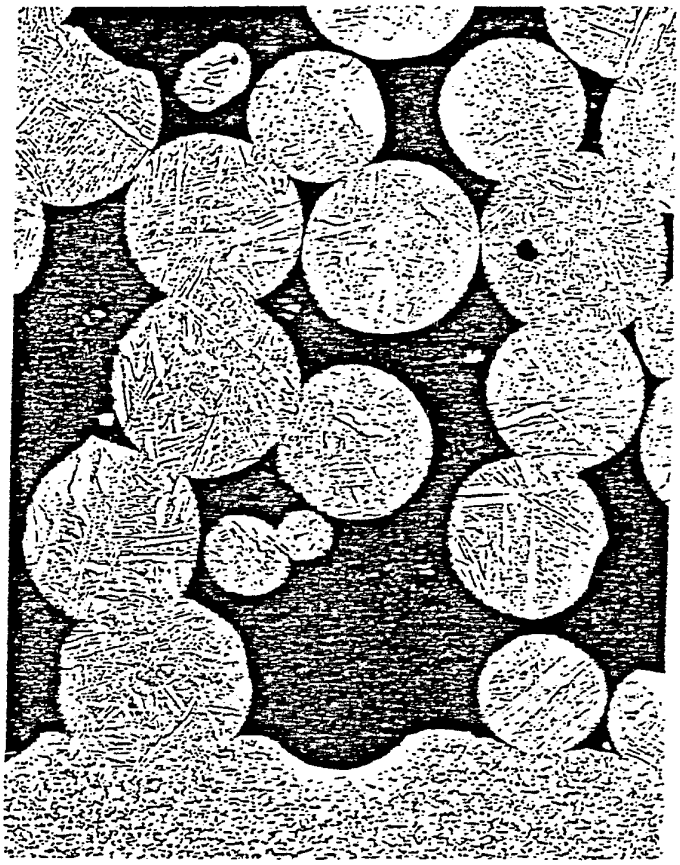

FIG 7

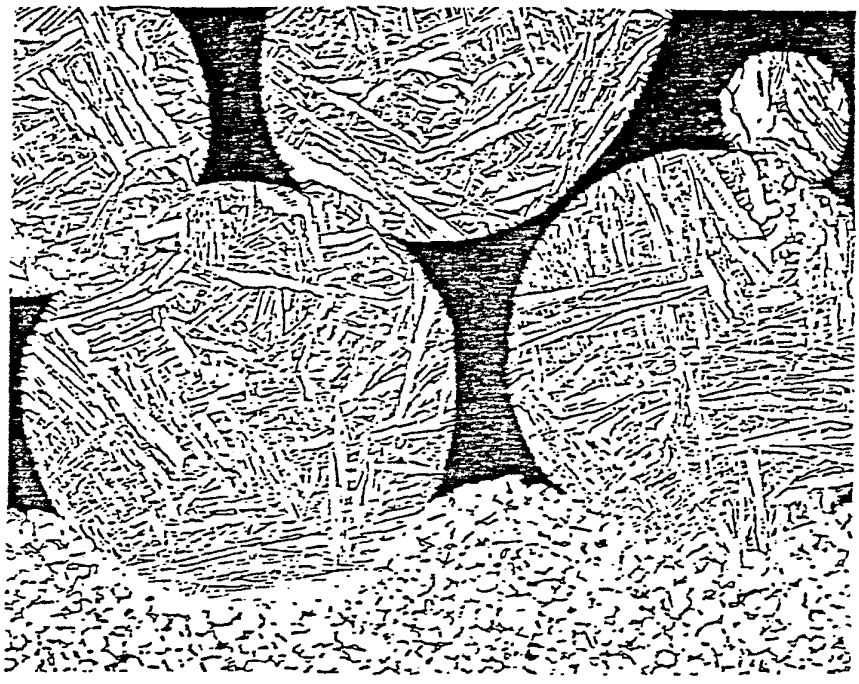

BUREAU OMPI WIPO

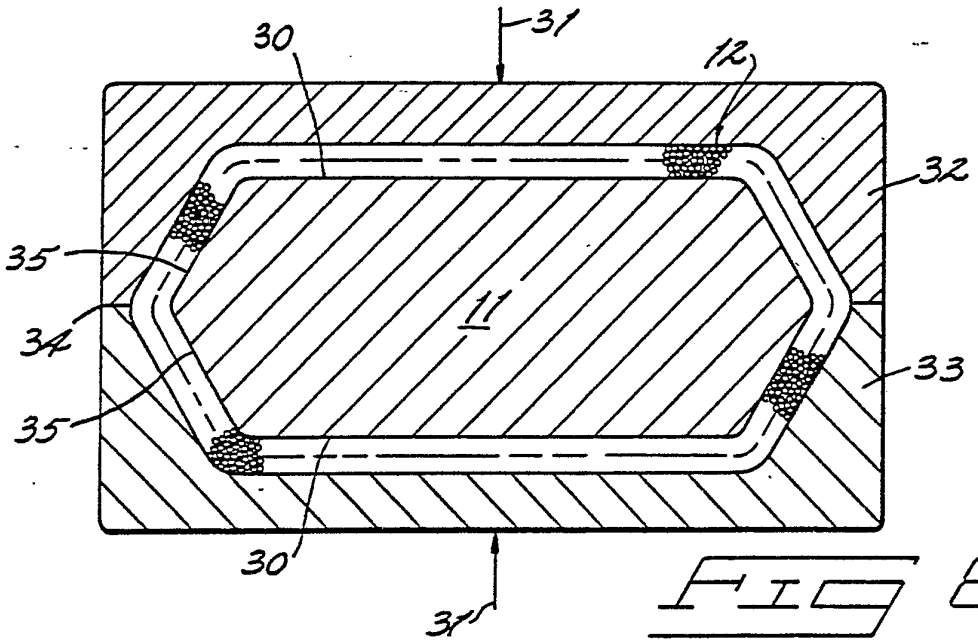

FIG 8

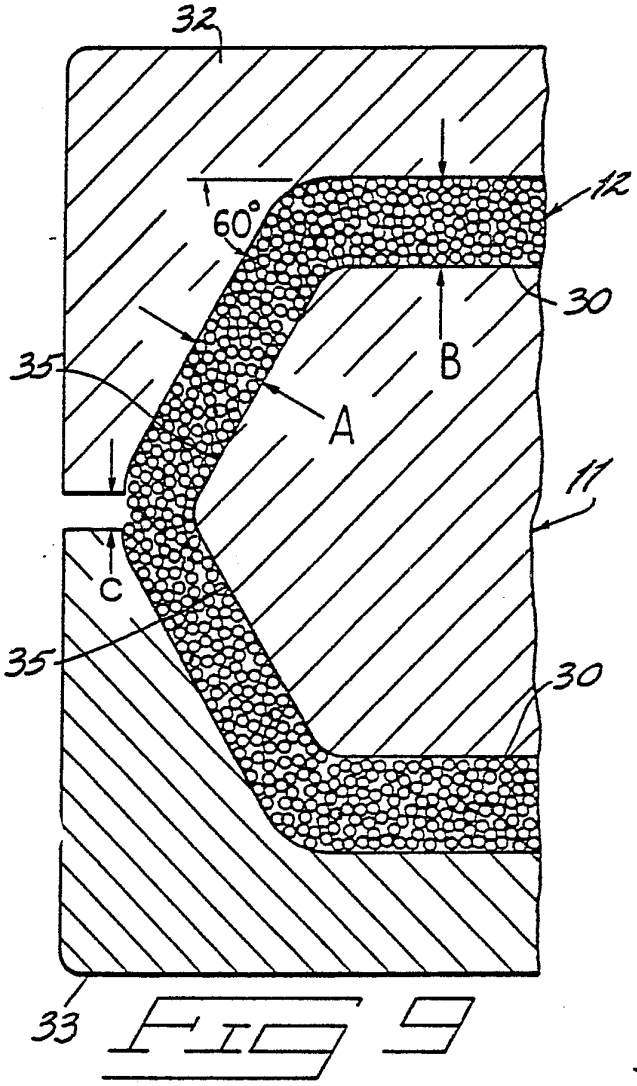

FIG 9

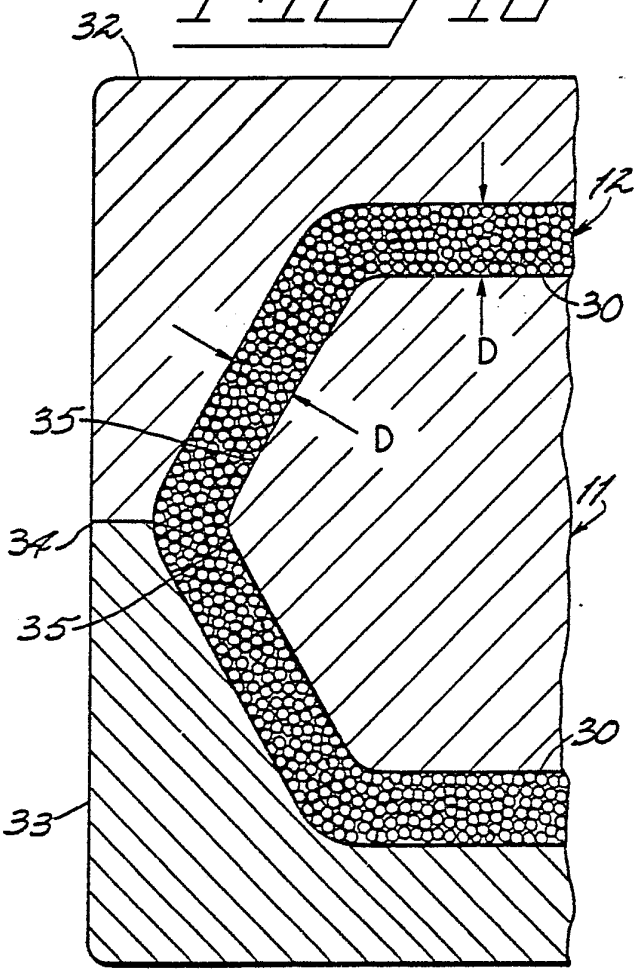

FIG 10

BUREAU

INTERNATIONAL SEARCH REPORT

International Application No PCT/US82/01016

I. CLASSIFICATION OF SUBJECT MATTER (If several classification symbols apply, indicate all) [3]

According to International Patent Classification (IPC) or to both National Classification and IPC

IPC[3] A61F 1/03
B22F 3/12, 5/00, 7/02

USC 128/92C
72/212
428/547

II. FIELDS SEARCHED

Minimum Documentation Searched [4]

Classification System	Classification Symbols	
US	75/222, 212, 226 3/1.9, 1.91, 1.93	128/92C, 92CA 428/547,548

Documentation Searched other than Minimum Documentation to the Extent that such Documents are Included in the Fields Searched [5]

III. DOCUMENTS CONSIDERED TO BE RELEVANT [14]

Category *	Citation of Document, [16] with indication, where appropriate, of the relevant passages [17]	Relevant to Claim No. [18]
X	US, A, 3852045 Published 3 December 1974, Wheeler et al	6-10,13,18, 19,24-28
X	US, A, 3855638 Published 24 December 1974, Pilliar	3-5,8 11-14,24
X	US, A, 3986212 Published 19 October 1976, Sauer	4,6,8,10,13 14, 16, 17 19-25,27-28
X	US, A, 4101984 Published 25 July 1978, MacGregor	1-5,7,11-15 18,22,24,26 27
X	US, A, 4206516 Published 10 June 1980, Pilliar	3-5,11-14

* Special categories of cited documents: [15]

"A" document defining the general state of the art which is not considered to be of particular relevance

"E" earlier document but published on or after the international filing date

"L" document which may throw doubts on priority claim(s) or which is cited to establish the publication date of another citation or other special reason (as specified)

"O" document referring to an oral disclosure, use, exhibition or other means

"P" document published prior to the international filing date but later than the priority date claimed

"T" later document published after the international filing date or priority date and not in conflict with the application but cited to understand the principle or theory underlying the invention

"X" document of particular relevance; the claimed invention cannot be considered novel or cannot be considered to involve an inventive step

"Y" document of particular relevance; the claimed invention cannot be considered to involve an inventive step when the document is combined with one or more other such documents, such combination being obvious to a person skilled in the art.

"&" document member of the same patent family

IV. CERTIFICATION

Date of the Actual Completion of the International Search [2]	Date of Mailing of this International Search Report [2]
8 October 1982	02 NOV 1982
International Searching Authority [1]	**Signature of Authorized Officer** [20]
	Anne Brodeng

ISA/US

III. DOCUMENTS CONSIDERED TO BE RELEVANT (CONTINUED FROM THE SECOND SHEET)

Category *	Citation of Document, [16] with indication, where appropriate, of the relevant passages [17]	Relevant to Claim No [18]
P	US, A, 4309488 Published 5 January 1982, Heide et al	1, 7-10,17 18, 20, 21 24, 26, 27
A	GB, A, 717034 Published 20 October 1954	1, 7, 14, 20, 27
A	GB, A, 784124 Published 2 October 1957	1,7,14,20, 27
A	N, Journal of Bone and Joint Surgery, vol. 53-A, No. 1, Jan 1971, pp. 101-114, Galante et al, "Sintered Fiber Metal Deposits as a Basis for Attachment of Implant Implants to Bone"	2, 8, 18, 20
A	N, Symposium on Research in Dental and Medical Material, Metallurgical Society of AIME, Oct. 2968, pp 137-150, Korostoff, "Researcg in Dental and Medical Material	10, 16, 17 20-24
A	N, Jones Fundamental principles of Powder Metallurgy, 1960, pp. 309-311	10, 16, 17, 20, 21, 22 23

FURTHER INFORMATION CONTINUED FROM THE SECOND SHEET

V. ☐ OBSERVATIONS WHERE CERTAIN CLAIMS WERE FOUND UNSEARCHABLE [10]

This international search report has not been established in respect of certain claims under Article 17(2) (a) for the following reasons:

1. ☐ Claim numbers _____, because they relate to subject matter [12] not required to be searched by this Authority, namely:

2. ☐ Claim numbers _____, because they relate to parts of the international application that do not comply with the prescribed requirements to such an extent that no meaningful international search can be carried out [13], specifically:

VI. ☒ OBSERVATIONS WHERE UNITY OF INVENTION IS LACKING [11]

This International Searching Authority found multiple inventions in this international application as follows:

I. Claims 1-6: "covering" process
II. Claims 7-23: molding process
III. Claims 24-25: coated prothesis
IV. Claims 26: coated prosthesis by "covering" process
V. Claims 27-28: coated prothesis by molding process

1. ☒ As all required additional search fees were timely paid by the applicant, this international search report covers all searchable claims of the international application.

2. ☐ As only some of the required additional search fees were timely paid by the applicant, this international search report covers only those claims of the international application for which fees were paid, specifically claims:

3. ☐ No required additional search fees were timely paid by the applicant. Consequently, this international search report is restricted to the invention first mentioned in the claims; it is covered by claim numbers:

Remark on Protest

☐ The additional search fees were accompanied by applicant's protest.

☒ No protest accompanied the payment of additional search fees.