# United States Patent [19]

**Larsson et al.**

[11] **3,858,998**

[45] **Jan. 7, 1975**


[54] **MANHOLE FRAME**


[76] Inventors: **Folke Larsson; Rune Larsson,** both of P.O. Box 32, Forsvik, Sweden



[22] Filed: **Aug. 22, 1972**

[21] Appl. No.: **282,829**

[52] **U.S. Cl.** ..... **404/26,** 52/19

[51] **Int. Cl.** ..... **E02d 29/14**

[58] **Field of Search** ..... 404/25, 26; 52/19, 20, 52/21; 49/463, 465; 151/55



[56] **References Cited**

UNITED STATES PATENTS

| | | | |
|---|---|---|---|
| 1,755,807 | 4/1930 | Boles | 151/28 |
| 2,358,750 | 9/1944 | Walker et al. | 404/25 UX |
| 2,801,579 | 8/1957 | Vinton | 404/26 |
| 2,930,295 | 3/1960 | Hale | 404/26 |
| 3,263,579 | 8/1966 | Dorris | 404/26 |
| 3,425,313 | 2/1969 | Villo | 151/54 X |

FOREIGN PATENTS OR APPLICATIONS

| | | | |
|---|---|---|---|
| 16,260 | 11/1891 | Great Britain | 404/25 |
| 728,437 | 2/1966 | Canada | 49/463 |
| 281,160 | 12/1927 | Great Britain | 49/463 |
| 322,287 | 11/1934 | Italy | 404/25 |



*Primary Examiner*—James T. McCall
*Assistant Examiner*—Thomas J. Holko
*Attorney, Agent, or Firm*—Linton & Linton



[57] **ABSTRACT**

A manhole frame comprises means protruding into the upper part of the well and has adjustment screws for raising, lowering and inclining the manhole frame while maintaining the guiding relation with the upper well ring. Sealing means are also arranged to prevent impurities from entering into the screws and movable parts of the manhole frame.


**6 Claims, 8 Drawing Figures**

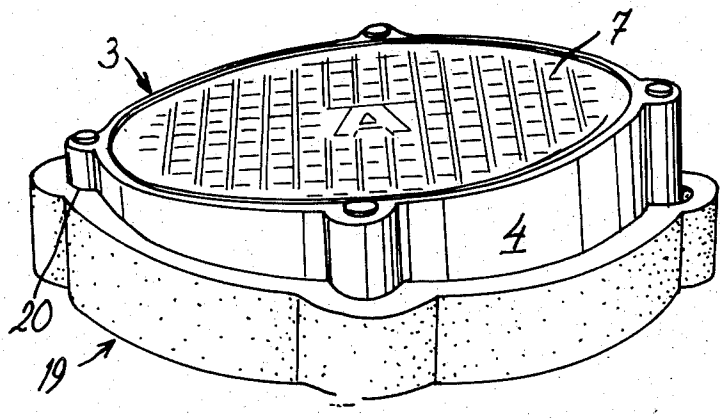

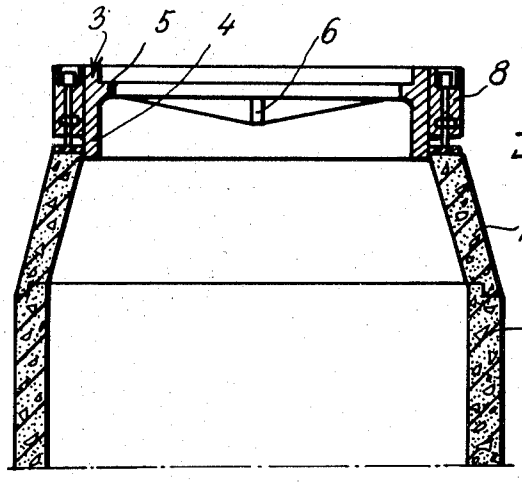


Fig. 1

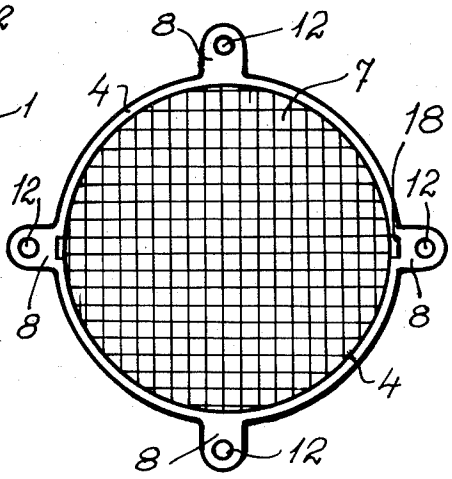


Fig. 2

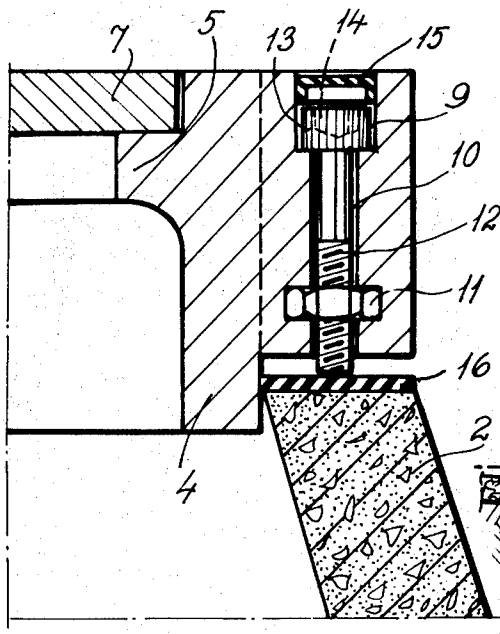


Fig. 3

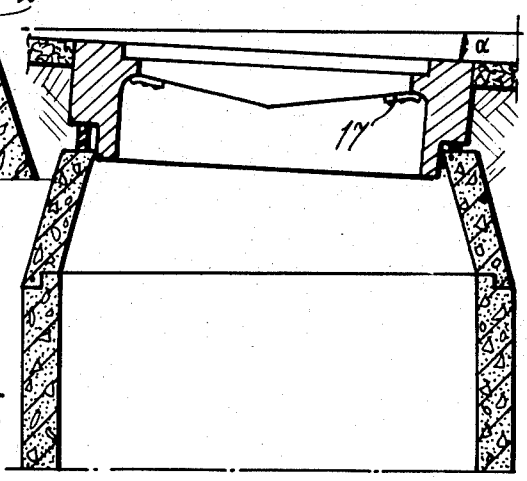


Fig. 4

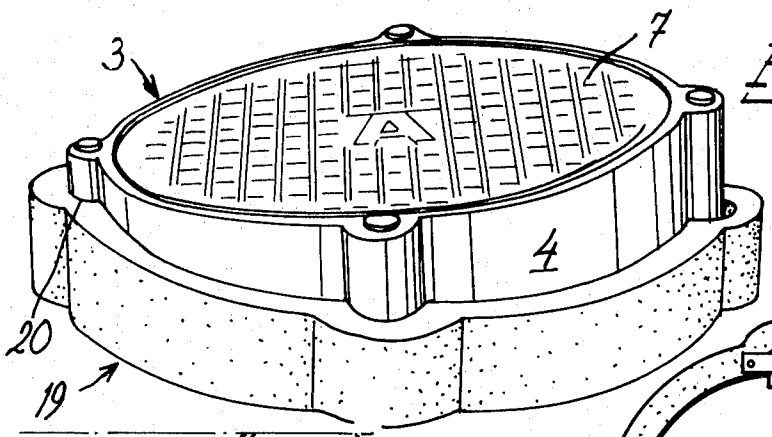


Fig. 5

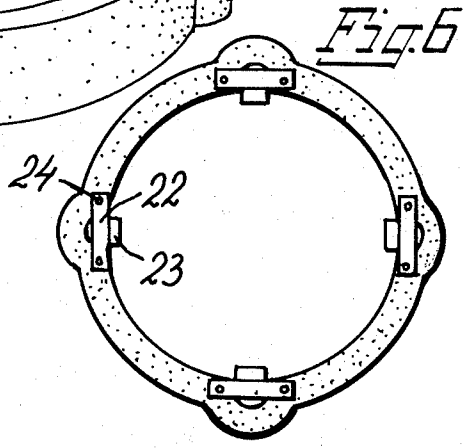


Fig. 6

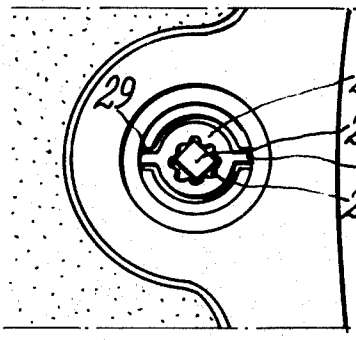


Fig. 8

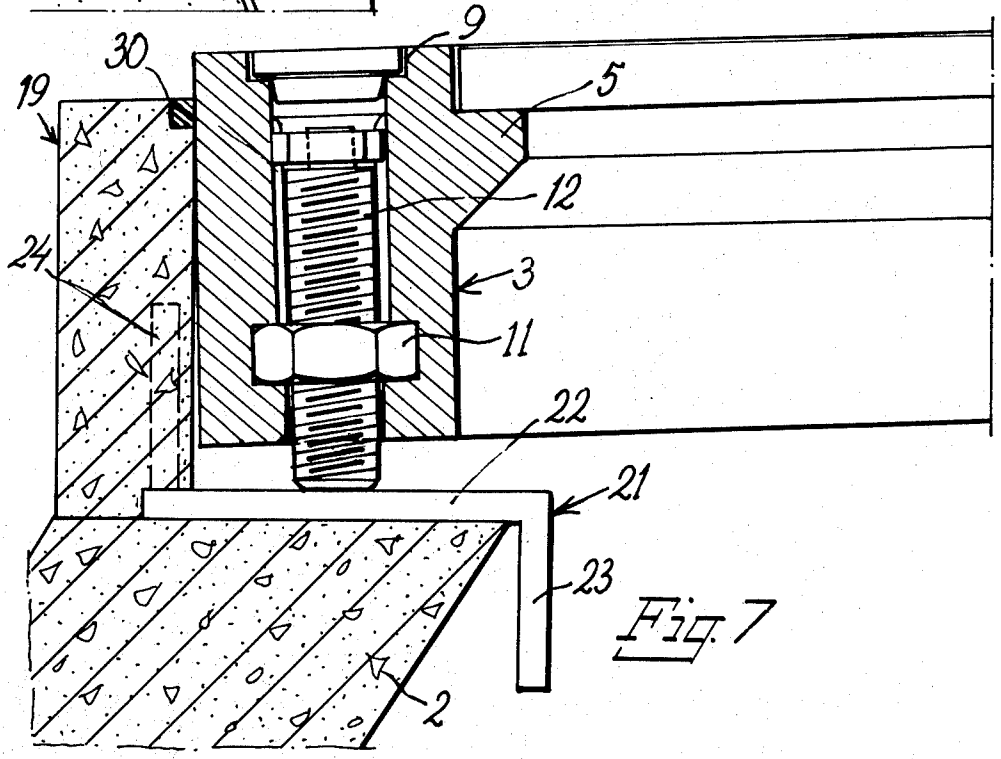


Fig. 7

# MANHOLE FRAME

This invention refers to a manhole frame. A serious problem in connection with such manhole frames which are located in roadways and the like is to obtain a height which is suitable in relation to the height of the street-paving. This problem often arises in connection with resurfacing of streets and highways.

In using the manhole frames now on the market additional paving material is to be applied under the manhole frame and the upper part of the well ring must be adjusted as to its height to obtain the desired level for the manhole frame. These works are time consuming and consequently expensive. In order to avoid these drawbacks it has been suggested to make the manhole frames in two parts from which only one need to be supported by additional paving material. The time saving thus obtained has however been very limited. It has also been suggested to provide the two parts with threads thereby enabling the upper part to be adjusted in relation to the lower part thereby obtaining an adjustment in vertical direction. It is however often desired to incline the cover relative to the bedding in which case the last-mentioned method of course cannot be applicated.

The main purpose of the invention is to provide a manhole frame which is guided by the upper part of the well ring, which may be inclined relative to the ground and which needs no addition of paving material under the manhole frame. To obtain these and other objects the new manhole frame is carried out according to the following claims.

Reference is made to the accompanying drawings showing two exemplary embodiments of the invention and in which

FIG. 1 is a longitudinal section through the upper part of a manhole frame according to a first embodiment of the invention.

FIG. 2 is a plan view of the manhole frame and

FIG. 3 is a section through the device according to FIG. 1 on a bigger scale.

FIG. 4 is a longitudinal section through the upper part of a well having a manhole cover being inclined to follow the shape of the roadway.

FIG. 5 shows a second embodiment of the invention in a perspective view and inclined.

FIG. 6 is a section through the lower part of the outer ring of the manhole frame according to the invention while

FIG. 7 shows on a bigger scale a section through part of the manhole frame and the upper part of the well ring cooperating therewith.

FIG. 8 finally, is a plan view of one of the lugs of the inner ring having a screw and a locking means for said screw.

Referring to the drawings numeral 1 designates a concrete ring forming part of the well and numeral 2 designates a conical concrete ring connected to said first-mentioned ring and forming the upper part of the well. The new manhole frame is generally denoted 3 and comprises a hollow cylinder 4 preferably made from pig iron and which as clearly shown in FIG. 1, 3 and 4 has substantially the same dimension as the opening of the conical ring 2. Said cylinder is intended to project with its lower part into said conical concrete ring and be guided thereby. The cylinder 4 is also provided with an inwardly directed preferably annular portion 5 intended to serve as a guide and support for a grating 7. This grating also has in a manner known per se reinforcements 6. The cylinder 4 further has a number of radially extending lugs 8, the lower part of which being situated on a height above the lower edge of the cylinder which depends upon the desired adjustment as to the height. As appears from FIG. 3 the lugs 8 have such a height that they may receive adjustment screws. For this purpose a hole 9 is provided in each lug. Said hole communicates with a narrower hole coaxial therewith, 10. The last-mentioned hole is through but in the lug is molded in a nut 11 the thread of which cooperating with the thread 12 of the adjustment screw. The head 13 of the adjustment screw will consequently be housed in the hole 9. Said screw is preferably of the type having an internal hexagon 14. The hole or opening 9 may be closed by means of a closure 15 preferably made from a plastic material and intended to prevent that water, dirt and the like may enter the hole 9. As appears from FIG. 3 it may be suitable to have the adjustment screws acting upon supporting plates 16, resting upon the upper concrete ring. Of course it is also possible to provide the supporting plates with parts intended to contact the interior of the concrete ring 2 in those cases where the manhole frame is to be exposed to considerable side loads. In such cases the outer diameter of the cylinder 4 is of course also adapted to the somewhat less inner dimension of the upper part of the well which is a consequence therefrom.



The use of the manhole frame is illustrated in FIG. 4. In order to accomodate the manhole frame to the roadway which in the illustrated case forms the angle $\alpha$ with the horisontal plane it is only necessary to apply the manhole frame such that it engages the concrete ring 2 whereupon the adjustment screws—after the closures 15 have been removed—are adjusted by means of a hexagon spanner such that the upper part of the manhole frame will be flush with the street-paving.

It is also desirable that the grating 7 may be secured to the manhole frame. To this end there is adapted as shown in FIG. 2 in the manhole frame two diametrically opposed grooves 18 the width of which somewhat exceeding the width of two radially extending elements 17 (See FIG. 4) secured to the reinforced ribs of the grating and preferably consisting of flat iron details. A bayonet-mount enabling the fastening of the grating by means of a turning movement is thereby obtained. As will be apparent from the following description the manhole cover according to the invention is extremely simple to install even by not specialized personnel and owing to the fact that it in addition to the grating and the adjustment screws only consists of a single part it may be manufactured at a relatively low price.

In cases where the reduction of the inner diameter which takes place as a consequence of the downwardly protruding ring 4 cannot be accepted the manhole frame construction according to FIGS. 5–8 may instead be used. Differing from the embodiment according to FIGS. 1–4 the manhole frame is made in the form of an outer ring, preferably made from concrete and having the general designation 19, and a ring, generally designated 3, being possible to elevate and lower and also incline relative to said ring 19. The outer ring is provided with grooves 20 for the lugs 8 of the inner ring and has centering means for cooperation with the upper part of the well as well as support parts against which the free ends of the adjustment screws are in-

tended to act. For this purpose there are in the outer concrete ring molded in a number of elements having the general designation **21.** In the illustrated embodiment these elements comprise an angular part the horisontal flange **22** of which having its under side flush with the under side of the concrete ring while its vertical flange **23** extends perpendicular thereto in a downwards direction. The element is fastened to the concrete ring by means of securing means as studs or similar **24,** secured to the horisontal flange of the element. The elements may also consist of one single part having the substantial shape of a Z. As appears from FIG. **6** the elements **21** are molded in the parts of the concrete ring in which the lugs of the inner ring are to be guided. The grooves **20** adapted in the concrete ring for said purpose are somewhat bigger than the corresponding shape of the lugs such that a certain clearance is apparent between the grooves and the lugs. In a similar manner the inner diameter of the concrete ring somewhat exceeds the outer diameter of the inner ring **4.** As appears from FIG. **7** the concrete ring as well as its support parts **22** are adapted to rest against the upper end portion of the well **2** and said part of the well is as illustrated in the drawing conical having its minor diameter upwards. The inner ring **4** has an inner diameter somewhat exceeding the diameter of the opening of the well **2.** The adjustment screws have in their upper end a square end **25.** In order to guarantee an adjustment i.e., to prevent that the screws are unscrewed owing to vibrations and the like there is applied over said square end **25** a locking means **26** which for the indicated purpose has a contoured hole **27** cooperating with the square end **25** and two radially extending tongues, adapted to be guided in axially extending slots **29** provided in the lugs. Said locking means is preferably made from a plastic material and may by means of a spiral wound part be connected to the closure **15** for closing the opening of the lug.

It is evident that the outer ring in this embodiment will always be centered relative to the upper part of the well at the same time as the inner ring within the tolerances between the outer dimension of the inner ring and the inner dimension of the outer ring may be inclined relative to this one and consequently also in relation to the upper part of the well. From the position shown in FIG. **7** the inner ring may of course also be elevated and lowered. By means of the elements molded in the outer ring there is obtained in addition to the exact centering of the manhole frame also that the plates **22** which are intended to take up the load from the adjustment screws and consequently the total load upon the manhole frame are always correctly located and must only be dimensioned according to the actual load.

In order to prevent in connection with the embodiment according to FIGS. **1–4** that coarse sand, asphalt or the like may enter between the upper part of the well and the cylinder **4** and probably also in the threads of the adjustment screws it is possible to use segments preferably made from metal sheet material and each being intended to bridge the distance between two adjacent lugs. Said segments include a mainly vertical part following the outer envelope surface of the ring from one lug to the next and a horisontal outwardly directed flange adapted to rest against the upper surface of the upper part of the well. These segments are used together with similar segments each embracing a lug. By arranging these segments before filling with coarse sand and asphalt the space between the upper part of the well and the cylinder will be free from impurities.

In the embodiment according to FIGS. **5–8** a resiliently compressible sealing **30** may be fitted in an internal groove adapted in the upper part of the ring **19.** Said sealing may be glued to the ring in question.

We claim:

**1.** A manhole frame for vaults in roadways and the like and intended to cover the opening of such a vault, comprising in combination a vault having an opening, a removable cover, an inner ring being of a configuration for supporting said removable cover and being provided with projections extending outwardly from said inner ring and having preferably the same height as said inner ring itself, each of said projections having in its upper surface a pocket with a tapped bottom wall, threaded bolts each extending through one of said tapped bottom walls, an outer ring having approximately the same height as said inner ring and an inner diameter some what exceeding the outer diameter of said inner ring such that a clearenece exists between said outer and said inner ring, said outer ring also having recesses to receive also with a clearence the projections of said inner ring whereby said inner ring may be raised, lowered and inclined relative to the outer ring by turning said bolts, said outer ring having further secured thereto combined supporting and guiding means secured to said outer ring with each means having a horizontal support part extending substantially radially inwards towards the center of said outer ring as well as a substantially vertically and downwardly extending guide part, said vertically extending guide parts being arranged to form when projecting into the upper part of the vault a centering guidance for said outer ring relative to the upper part of the vault, at least a part of each of said horizontal parts being located at the under side of one of said recesses in said outer ring thus enabling the lower end of said bolts being threaded through said projections to act upon said supporting parts.

**2.** A manhole frame as claimed in claim **1** wherein said supporting and guiding means consists of bent flat irons and that the number of such elements is equal to the number of projections of said inner ring.

**3.** A manhole frame as claimed in claim **1** wherein said inner ring has an inner distance approximately corresponding to the diameter of said opening in said vault.

**4.** A manhole frame as claimed in claim **1** wherein said bolts in their upper end have a non-circular head, locking means of resilient meterial such as plastics each have ribs and a part non-turnably embracing one of said heads, and said projections have axial grooves receiving said ribs to prevent unintentional turning of said bolts.

**5.** A manhole frame as claimed in claim **4** including closures each for closing one of said bolts above said locking means.

**6.** A manhole frame as claimed in claim **1** wherein said outer ring at its upper part has a groove following the interior envelope surface of said outer ring and a seal in said groove, positioned to contact with its inner surface the outer envelope surface of said inner ring.

* * * * *