(19) Europäisches Patentamt
European Patent Office
Office européen des brevets

(11) EP 3 598 587 A1

(12) EUROPEAN PATENT APPLICATION
published in accordance with Art. 153(4) EPC

(43) Date of publication:
22.01.2020 Bulletin 2020/04

(21) Application number: **18844870.8**

(22) Date of filing: **14.05.2018**

(51) Int Cl.:
H01R 13/627 *(2006.01)*

(86) International application number:
PCT/CN2018/086723

(87) International publication number:
WO 2019/029210 (14.02.2019 Gazette 2019/07)

(84) Designated Contracting States:
AL AT BE BG CH CY CZ DE DK EE ES FI FR GB GR HR HU IE IS IT LI LT LU LV MC MK MT NL NO PL PT RO RS SE SI SK SM TR
Designated Extension States:
BA ME
Designated Validation States:
KH MA MD TN

(30) Priority: **09.08.2017 CN 201710674105**

(71) Applicant: **CRRC Qingdao Sifang Co., Ltd.**
Qingdao City, Shandong 266111 (CN)

(72) Inventors:
- **LIU, Dongyuan**
  Qingdao
  Shandong 266111 (CN)
- **XU, Baoshan**
  Qingdao
  Shandong 266111 (CN)
- **LI, Hao**
  Qingdao
  Shandong 266111 (CN)
- **YANG, Xiaolin**
  Qingdao
  Shandong 266111 (CN)
- **LI, Tao**
  Qingdao
  Shandong 266111 (CN)

(74) Representative: **Carangelo, Pierluigi et al**
Jacobacci & Partners S.p.A.
Via Tomacelli 146
00186 Roma (IT)

(54) VEHICLE-MOUNTED ELECTRIC CONNECTING DEVICE AND VEHICLE-MOUNTED CONNECTING APPARATUS FOR RAIL TRAIN

(57) A vehicle end electric connecting device for a rail train and a vehicle end connecting apparatus are provided. The vehicle end electric connecting device includes: a mechanical connecting portion (10), moving in a first direction so as to be connected to a mechanical connecting portion (10) of another vehicle end electric connecting device; and a plurality of electric connecting portions, spaced apart from each other around the mechanical connecting portion (10), each electric connecting portion of the plurality of electric connecting portions including a plurality of connecting ports facing the first direction, the connecting ports being configured for connecting to connecting ports of the another vehicle end electric connecting device, and the connecting ports being interfaces or joints, or the connecting ports being interfaces and joints. By using the vehicle end electric connecting device of the present invention, an electrical connection between vehicle bodies is changed from a conventional indirect bridging-line connection to direct connection of connecting ports, thereby simplifying the operation steps of workers, shortening time for the electrical connection in grouping and ungrouping processes, and implementing automatic control.

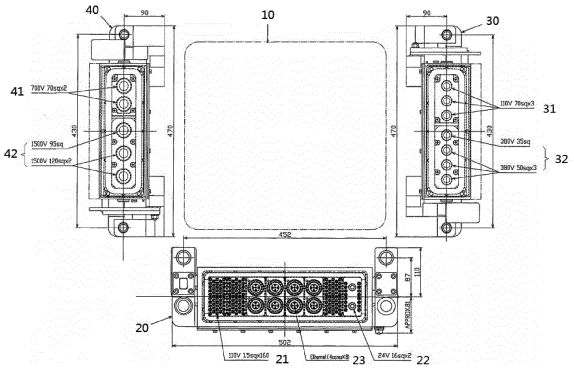

Fig. 1

EP 3 598 587 A1

Description

Technical Field

[0001] The present invention relates to the field of rail trains, and in particular to a vehicle end electric connecting device for a rail train and a vehicle end connecting apparatus.

Background

[0002] A vehicle end electric connecting mode of the existing rail vehicle is manual connection through a bridging line and a vehicle end port, that is, one end of the bridging line is connected to a terminal of a first vehicle body, and the other end is connected to a terminal of a second vehicle body, thereby achieving an electrical connection between the two vehicle bodies.

[0003] The electrical connection mode is low in integration and cannot be achieve automatic connection. It takes time and effort for workers to connect bridging lines in sequence.

Summary

[0004] The present invention is to provide a vehicle end electric connecting device for a rail train and a vehicle end connecting apparatus, which may solve a problem of inconvenience in vehicle end electric connection in the related technology.

[0005] According to an aspect of the present invention, a vehicle end electric connecting device for a rail train is provided. The vehicle end electric connecting device includes: a mechanical connecting portion, moving in a first direction so as to be connected to a mechanical connecting portion of another vehicle end electric connecting device; and a plurality of electric connecting portions, spaced apart from each other around the mechanical connecting portion, each electric connecting portion of the plurality of connecting portions including a plurality of connecting ports facing the first direction, the connecting ports being used for connecting to the connecting ports of the another vehicle end electric connecting device, and the connecting ports being interfaces or joints, or the connecting ports being interfaces and joints.

[0006] Further, the plurality of connecting portions include at least two of a low-voltage connecting portion, a medium-voltage connecting portion, and a high-voltage connecting portion.

[0007] Further, the plurality of connecting portions include a low-voltage connecting portion, arranged below the mechanical connecting portion, the low-voltage connecting portion including at least one of a first 110V connecting port, a 24V connecting port and an Ethernet connecting port.

[0008] Further, the plurality of connecting portions include a medium-voltage connecting portion, arranged on a left side of the mechanical connecting portion or a right side of the mechanical connecting portion; the medium-voltage connecting portion including a second 110V connecting port or a 380V connecting port; or the medium-voltage connecting portion including a second 110V connecting port and a 380V connecting port.

[0009] Further, the medium-voltage connecting portion includes the second 110V connecting port and the 380V connecting port, and the medium-voltage connecting portion further includes a separation board for separating the second 110V connecting port and the 380V connecting port.

[0010] Further, the plurality of connecting portions include a high-voltage connecting portion, arranged on a left side of the mechanical connecting portion or a right side of the mechanical connecting portion; the high-voltage connecting portion including a 700V connecting port or a 1,500V connecting port; or the high-voltage connecting portion including a 700V connecting port and a 1,500V connecting port.

[0011] Further, the high-voltage connecting portion includes the 700V connecting port and the 1,500V connecting port, and the high-voltage connecting portion further includes a separation board for separating the 700V connecting port and the 1,500V connecting port.

[0012] Further, the vehicle end electric connecting device includes a housing. The housing is provided with a ground connecting portion for connecting a ground wire. The vehicle end electric connecting device further includes an electric conduction portion arranged on the housing. The electric conduction portion is configured to electrically connect the housing to a housing of the another vehicle end electric connecting device.

[0013] According to another aspect of the present invention, a vehicle end connecting apparatus for a rail vehicle is provided, which includes a car coupler and a vehicle end electric connecting device. The vehicle end electric connecting device is the above vehicle end electric connecting device. The vehicle end electric connecting device is connected to the car coupler.

[0014] Further, the vehicle end connecting apparatus further includes a telescopic drive portion. A base of the telescopic drive portion is provided on the car coupler. The vehicle end electric connecting device is provided on a telescopic arm of the telescopic drive portion.

[0015] The vehicle end electric connecting device of the present invention is directly connected to a connecting port of an electric connecting portion of another vehicle end electric connecting device through a connecting port of an electric connecting portion to make two vehicle bodies electrically connected, so that a separate bridging line may be eliminated. That is, by using the vehicle end electric connecting device of the present invention, an electrical connection between vehicle bodies is changed from a conventional indirect bridging-line connection to direct connection of connecting ports, thereby simplifying the operation steps of workers, shortening time for the electrical connection in grouping and ungrouping processes, and implementing automatic control.

Brief Description of the Drawings

[0016] The accompanying drawings, which constitute a part of this application, are used to provide a further understanding of the present invention, and the exemplary embodiments of the present invention and the description thereof are used to explain the present invention, but do not constitute improper limitations to the present invention. In the drawings:

Fig. 1 illustrates a structure diagram of a mechanical connecting portion and an electric connecting portion of a vehicle end electric connecting device according to an embodiment of the present invention; and

Fig. 2 illustrates an external structure diagram of a vehicle end electric connecting device according to an embodiment of the present invention.

[0017] The drawings include the following reference signs:

10: Mechanical connecting portion; 20: low-voltage connecting portion; 21: first 110V connecting port; 22: 24V connecting port; 23: Ethernet connecting port; 30: medium-voltage connecting portion; 31: second 110V connecting port; 32: 380V connecting port; 40: high-voltage connecting portion; 41: 700V connecting port; 42: 1,500V connecting port; 50: housing; 51: ground connecting portion; 60: electric conduction portion.

Detailed Description of the Embodiments

[0018] It is to be noted that in the case of no conflict, the features in the embodiments and the embodiments in the present application may be combined with each other. The present invention is described below with reference to the drawings and in conjunction with the embodiments in detail.

[0019] It is to be noted that the following detailed description is illustrative and is intended to provide a further description of the present application. All technical and scientific terms used herein have the same meaning as commonly understood by those of ordinary skill in the art to which the present application belongs, unless otherwise indicated.

[0020] For ease of description, spatial relative terms such as "over", "above", "on an upper surface" and "upper" may be used herein for describing a spatial position relation between a device or feature and other devices or features shown in the drawings. It will be appreciated that the spatial relative terms aim to contain different orientations in usage or operation besides the orientations of the devices described in the drawings. For example, if the devices in the drawings are inverted, devices described as "above other devices or structures" or "over other devices or structures" will be located as "below other devices or structures" or "under other devices or structures". Thus, an exemplar term "above" may include two orientations namely "above" and "below". The device may be located in other different modes (rotated by 90 degrees or located in other orientations), and spatial relative descriptions used herein are correspondingly explained.

[0021] According to an aspect of the present invention, a vehicle end electric connecting device for a rail train is provided. As shown in Fig. 1 and Fig. 2, the vehicle end electric connecting device includes: a mechanical connecting portion 10, moving in a first direction so as to be connected to a mechanical connecting portion 10 of another vehicle end electric connecting device; and a plurality of electric connecting portions, spaced apart from each other around the mechanical connecting portion 10, each electric connecting portion of the plurality of electric connecting portions including a plurality of connecting ports facing the first direction, the connecting ports being used for connecting to the connecting ports of the another vehicle end electric connecting device, and the connecting ports being interfaces or joints, or the connecting ports being interfaces and joints.

[0022] The vehicle end electric connecting device of the present invention is directly connected to a connecting port of an electric connecting portion of another vehicle end electric connecting device through a connecting port of an electric connecting portion to make two vehicle bodies electrically connected, so that a separate bridging line may be eliminated. That is, by using the vehicle end electric connecting device of the present invention, an electrical connection between vehicle bodies is changed from a conventional indirect bridging-line connection to direct connection of connecting ports, thereby simplifying the operation steps of workers, shortening time for the electrical connection in grouping and ungrouping processes, and implementing automatic control.

[0023] In addition, the vehicle end electric connecting device of the present invention further includes a mechanical connecting portion 10. The mechanical connecting portion 10 has a certain connection strength, thereby preventing the connection ports from being detached due to an external force, and improving the connection reliability of the electric connecting portion.

[0024] It is to be noted that the connecting ports in the same electric connecting portion may be fully interfaces or fully joints, or may be partially interfaces or partially joints. The connection ports of two electric connecting portions connected to each other are the cooperation of an interface and a joint.

[0025] Preferably, the plurality of electric connecting portions include: at least two of a low-voltage connecting portion 20, a medium-voltage connecting portion 30, and a high-voltage connecting portion 40.

[0026] It is to be noted that the low-voltage connecting portion 20, the medium-voltage connecting portion 30 and the high-voltage connecting portion 40 are merely representative, and do not limit a voltage difference between the respective connecting portions.

[0027] As can be seen from Fig. 1, no more than one

electric connecting portion is provided on each side of the mechanical connecting portion 10, so that the respective electric connecting portions are as far apart as possible to avoid mutual interference.

[0028] Preferably, the plurality of electric connecting portions include a low-voltage connecting portion 20, arranged below the mechanical connecting portion 10. The low-voltage connecting portion 20 includes at least one of a first 110V connecting port 21, a 24V connecting port 22 and an Ethernet connecting port 23.

[0029] Specifically, as shown in Fig. 1, in the present embodiment, a low-voltage connecting portion 20 is arranged below the mechanical connecting portion 10. The low-voltage connecting portion 20 is longest with respect to other electric connecting portions. The low-voltage connecting portion 20 includes: eight Ethernet connecting ports 23, which are arranged in two rows each including four ports; 160 first 110V connecting ports 21, that is, 110V, 1.5sq round interfaces; and two 24V connecting ports 22, specifically 24V, 16sq round interfaces, arranged on the upper and lower sides. The eight Ethernet connecting ports 23 are located in the middle of the low-voltage connecting portion 20. The 160 first 110V connecting ports 21 are arranged on both sides of the eight Ethernet connecting ports 23. The two 24V connecting ports 22 are located on the rightmost side of the figure illustrating the low-voltage connecting portion 20.

[0030] Preferably, the plurality of electric connecting portions include a medium-voltage connecting portion 30, arranged on the left side of the mechanical connecting portion 10 or the right side of the mechanical connecting portion 10. The medium-voltage connecting portion 30 includes a second 110V connecting port 31 and/or a 380V connecting port 32.

[0031] Specifically, as shown in Fig. 1, in the present embodiment, the medium-voltage connecting portion 30 is arranged on the right side of the figure illustrating the mechanical connecting portion 10. The medium-voltage connecting portion 30 includes: three second 110V connecting ports 31, specifically 110V, 70sq round interfaces; and four 380V connecting ports 32, specifically one 380V, 35sq round interface located above and three 380V, 50sq round interfaces located below. The seven interfaces are arranged in a single row, the second 110V connecting ports 31 are arranged on the upper side of the medium-voltage connecting portion 30, and the 380V connecting ports 32 are located on the lower side of the medium-voltage connecting portion 30.

[0032] Preferably, the medium-voltage connecting portion 30 includes the second 110V connecting port 31 and the 380V connecting port 32, and the medium-voltage connecting portion 30 further includes a separation board for separating the second 110V connecting port 31 and the 380V connecting port 32. The separation board has two functions of physical isolation and insulated isolation.

[0033] Preferably, the plurality of electric connecting portions include a high-voltage connecting portion 40, arranged on the left side of the mechanical connecting portion 10 or the right side of the mechanical connecting portion 10. The high-voltage connecting portion 40 includes a 700V connecting port 41 or a 1,500V connecting port 42; or the high-voltage connecting portion 40 includes a 700V connecting port 41 and a 1,500V connecting port 42.

[0034] Specifically, as shown in Fig. 1, in the present embodiment, the high-voltage connecting portion 40 is arranged on the left side of the figure illustrating the mechanical connecting portion 10. The high-voltage connecting portion 40 includes: two 700V connecting ports 41, specifically 700V, 70sq round interfaces; and three 1,500V connecting ports 42, specifically one 1,500V, 95sq round interface located above and two 1,500V, 120sq round interfaces located below. The five interfaces are arranged in a single row, the 700V connecting ports 41 are arranged on the upper side of the high-voltage connecting portion 40, and the 1,500V connecting ports 42 are located on the lower side of the high-voltage connecting portion 40.

[0035] Preferably, the high-voltage connecting portion 40 includes the 700V connecting port 41 and the 1,500V connecting port 42, and the high-voltage connecting portion 40 further includes a separation board for separating the 700V connecting port 41 and the 1,500V connecting port 42. The separation board has two functions of physical isolation and insulated isolation.

[0036] Preferably, as shown in Fig. 2, the vehicle end electric connecting device includes a housing 50. The housing 50 is provided with a ground connecting portion 51 for connecting a ground wire. The vehicle end electric connecting device further includes an electric conduction portion 60 arranged on the housing 50. The electric conduction portion 60 is configured to electrically connect the housing 50 to the housing 50 of the another vehicle end electric connecting device.

[0037] The ground connecting portion 51 on the housing 50 is connected to the vehicle body through the ground wire, the grounding of the housing 50 is achieved to protect the vehicle end electric connecting device, and electromagnetic interference can also be prevented. The electric conduction portion 60 is a metal guide plunger, and the housings 50 of two interconnected vehicle end electric connecting devices are electrically connected by the electric conduction portion 60 such that the potentials therebetween are the same.

[0038] According to another aspect of the present invention, a vehicle end connecting apparatus for a rail vehicle is also provided, which includes a car coupler and a vehicle end electric connecting device. The vehicle end electric connecting device is the above vehicle end electric connecting device. The vehicle end electric connecting device is connected to the car coupler.

[0039] Specifically, in an embodiment, the vehicle end electric connecting device is arranged at the lower part of the car coupler and is followed by the car coupler. When two vehicles are grouped, the vehicle end electric

connecting devices are connected with the connection of the car couplers, thereby realizing automatic grouping and ungrouping.

[0040] Preferably, the vehicle end connecting apparatus further includes a telescopic drive portion. A base of the telescopic drive portion is provided on the car coupler. The electric connecting device is provided on a telescopic arm of the telescopic drive portion. The telescopic drive portion may be a cylinder piston.

[0041] When two vehicles are not connected, the vehicle end electric connecting devices and the car couplers are in a fixed state. After mechanical car couplers are connected, the vehicle end electric connecting devices are pushed out through a push rod mechanism of the cylinder piston to realize an electrical connection between the two trains.

[0042] In order to realize the simultaneous operation of the telescopic drive portions of the two vehicles when an operation switch issues a command, command information is transmitted by a low-voltage control line, so the low-voltage control line is mounted on the car coupler. When the car couplers are connected, the low-voltage control line is turned on. It is not affected by the connection status of the vehicle end electric connecting device. The working flow of the vehicles during connecting and ungrouping is as follows.

[0043] Grouping process: car coupler docking, low-voltage control line connection, driver's cab command issuing, closing of an electric circuit and a gas circuit in telescopic drive portions of two vehicles, pushing of a vehicle end electric connecting device by a push rod, connection of mechanical connecting portions, and connection of electric connecting portions.

[0044] Ungrouping process: driver's cab command issuing, pushing of a vehicle end electric connecting device by a push rod, separation of mechanical connecting portions, separation of electric connecting portions, opening of an electric circuit and a gas circuit in telescopic drive portions of two vehicles, car coupler separation, and low-voltage control line separation.

[0045] It is to be noted that terms used herein only aim to describe specific implementation manners, and are not intended to limit exemplar implementations of this application. Unless otherwise directed by the context, singular forms of terms used herein are intended to include plural forms. Besides, it will be also appreciated that when terms "contain" and/or "include" are used in the description, it is indicated that features, steps, operations, devices, assemblies and/or a combination thereof exist.

[0046] It is to be noted that the specification and claims of the disclosure and the terms "first", "second" and the like in the drawings are used to distinguish similar objects, and do not need to describe a specific sequence or a precedence order. It will be appreciated that data used in such a way may be exchanged under appropriate conditions, in order that the embodiments of the present invention described here can be implemented, for example, in a sequence other than sequences graphically shown or described here. In addition, terms "include" and "have" and any variations thereof are intended to cover non-exclusive inclusions. For example, it is not limited for processes, methods, systems, products or devices containing a series of steps or units to clearly list those steps or units, and other steps or units which are not clearly listed or are inherent to these processes, methods, products or devices may be included instead.

[0047] The above is only the preferred embodiments of the present invention, not intended to limit the present invention. As will occur to those skilled in the art, the present invention is susceptible to various modifications and changes. Any modifications, equivalent replacements, improvements and the like made within the spirit and principle of the present invention shall fall within the scope of protection of the present invention.

Claims

1. A vehicle end electric connecting device for a rail train, comprising:

   a mechanical connecting portion (10), moving in a first direction so as to be connected to a mechanical connecting portion (10) of another vehicle end electric connecting device; and
   a plurality of electric connecting portions, spaced apart from each other around the mechanical connecting portion (10), each electric connecting portion of the plurality of electric connecting portions comprising a plurality of connecting ports facing the first direction, the connecting ports being configured for connecting to connecting ports of the another vehicle end electric connecting device, and the connecting ports being interfaces or joints, or the connecting ports being interfaces and joints.

2. The vehicle end electric connecting device as claimed in claim 1, wherein the plurality of electric connecting portions comprise: at least two of a low-voltage connecting portion (20), a medium-voltage connecting portion (30), and a high-voltage connecting portion (40).

3. The vehicle end electric connecting device as claimed in claim 1, wherein the plurality of electric connecting portions comprise a low-voltage connecting portion (20), arranged below the mechanical connecting portion (10), the low-voltage connecting portion (20) comprising at least one of a first 110V connecting port (21), a 24V connecting port (22) and an Ethernet connecting port (23).

4. The vehicle end electric connecting device as claimed in claim 1, wherein the plurality of electric

connecting portions comprise a medium-voltage connecting portion (30), arranged on a left side of the mechanical connecting portion (10) or a right side of the mechanical connecting portion (10);
the medium-voltage connecting portion (30) comprising a second 110V connecting port (31) or a 380V connecting port (32); or the medium-voltage connecting portion (30) comprising a second 110V connecting port (31) and a 380V connecting port (32).

5. The vehicle end electric connecting device as claimed in claim 4, wherein the medium-voltage connecting portion (30) comprises the second 110V connecting port (31) and the 380V connecting port (32), and the medium-voltage connecting portion (30) further comprises a separation board for separating the second 110V connecting port (31) and the 380V connecting port (32).

6. The vehicle end electric connecting device as claimed in claim 1, wherein the plurality of electric connecting portions comprise a high-voltage connecting portion (40), arranged on a left side of the mechanical connecting portion (10) or a right side of the mechanical connecting portion (10);
the high-voltage connecting portion (40) comprising a 700V connecting port (41) or a 1,500V connecting port (42); or the high-voltage connecting portion (40) comprising a 700V connecting port (41) and a 1,500V connecting port (42).

7. The vehicle end electric connecting device as claimed in claim 6, wherein the high-voltage connecting portion (40) comprises the 700V connecting port (41) and the 1,500V connecting port (42), and the high-voltage connecting portion (40) further comprises a separation board for separating the 700V connecting port (41) and the 1,500V connecting port (42).

8. The vehicle end electric connecting device as claimed in claim 1, comprising a housing (50), wherein the housing (50) is provided with a ground connecting portion (51) for connecting a ground wire, the vehicle end electric connecting device further comprises an electric conduction portion (60) arranged on the housing (50), and the electric conduction portion (60) is configured to electrically connect the housing (50) to a housing (50) of the another vehicle end electric connecting device.

9. A vehicle end connecting apparatus for a rail vehicle, comprising a car coupler and a vehicle end electric connecting device, wherein the vehicle end electric connecting device is a vehicle end electric connecting device as claimed in any one of claims 1 to 8, and the vehicle end electric connecting device is connected to the car coupler.

10. The vehicle end connecting apparatus as claimed in claim 9, further comprising a telescopic drive portion, wherein a base of the telescopic drive portion is provided on the car coupler, and the vehicle end electric connecting device is provided on a telescopic arm of the telescopic drive portion.

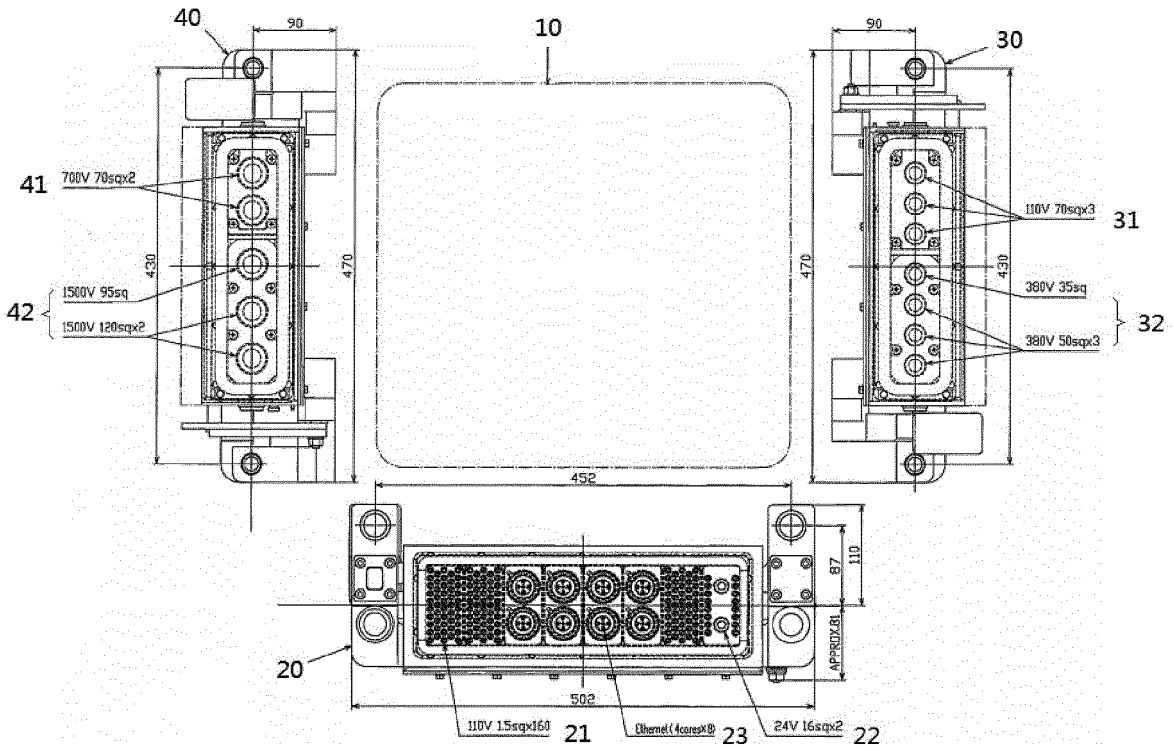
40
90
10
90
30
41
700V 70sqx2
110V 70sqx3
31
430
470
470
430
42
1500V 95sq
380V 35sq
1500V 120sqx2
380V 50sqx3
32
452
87
110
APPROX.81
20
502
110V 1.5sqx160
21
Ethernet(4coresx8)
23
24V 16sqx2
22

Fig. 1

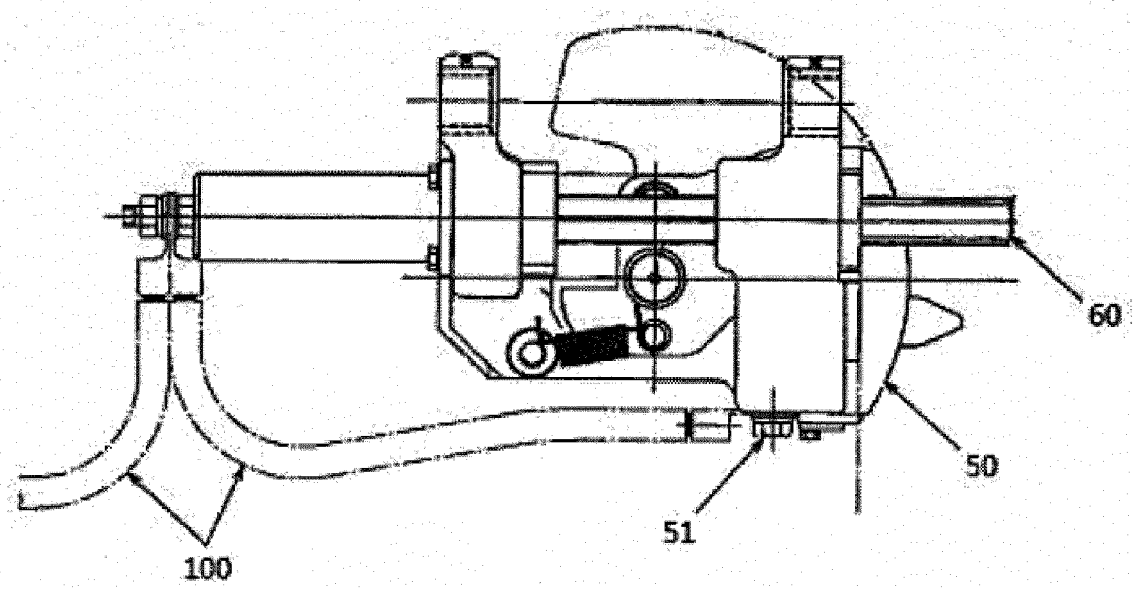
60
50
51
100

Fig. 2

INTERNATIONAL SEARCH REPORT

International application No.
PCT/CN2018/086723

A. CLASSIFICATION OF SUBJECT MATTER

H01R 13/627(2006.01)i

According to International Patent Classification (IPC) or to both national classification and IPC

B. FIELDS SEARCHED

Minimum documentation searched (classification system followed by classification symbols)

H01R

Documentation searched other than minimum documentation to the extent that such documents are included in the fields searched

Electronic data base consulted during the international search (name of data base and, where practicable, search terms used)

CNPAT, WPI, EPODOC, CNKI: 列车, 车厢, 周围, 四周, 电气连接, 机械连接, train, compartment, around, electric 3w connect, mechanistic 3w connect

C. DOCUMENTS CONSIDERED TO BE RELEVANT

Category*	Citation of document, with indication, where appropriate, of the relevant passages	Relevant to claim No.
Y	苑丰彪 等 (YUAN, Fengbiao et al.). "高速动车组视频监控系统设计研究 (Analysis and Design of Video Surveillance System for the High Speed EMU)" *"机电一体化" ("Mechatronics")*, No. no. 02, 20 February 2013 (2013-02-20), pp. 47-50	1-10
Y	CN 102202919 A (WABCO GMBH) 28 September 2011 (2011-09-28) description, paragraphs [0003]-[0028], and figures 1-3	1-10
A	CN 201633862 U (SUN SHEN ENTERPRISE CO., LTD.) 17 November 2010 (2010-11-17) entire document	1-10
PX	CN 107645101 A (CRRC QINGDAO SIFANG CO., LTD.) 30 January 2018 (2018-01-30) claims 1-10	1-10

☐ Further documents are listed in the continuation of Box C. ☑ See patent family annex.

* Special categories of cited documents:

"A" document defining the general state of the art which is not considered to be of particular relevance

"E" earlier application or patent but published on or after the international filing date

"L" document which may throw doubts on priority claim(s) or which is cited to establish the publication date of another citation or other special reason (as specified)

"O" document referring to an oral disclosure, use, exhibition or other means

"P" document published prior to the international filing date but later than the priority date claimed

"T" later document published after the international filing date or priority date and not in conflict with the application but cited to understand the principle or theory underlying the invention

"X" document of particular relevance; the claimed invention cannot be considered novel or cannot be considered to involve an inventive step when the document is taken alone

"Y" document of particular relevance; the claimed invention cannot be considered to involve an inventive step when the document is combined with one or more other such documents, such combination being obvious to a person skilled in the art

"&" document member of the same patent family

Date of the actual completion of the international search	Date of mailing of the international search report
27 July 2018	**21 August 2018**
Name and mailing address of the ISA/CN **State Intellectual Property Office of the P. R. China** **No. 6, Xitucheng Road, Jimenqiao Haidian District, Beijing 100088** **China** Facsimile No. **(86-10)62019451**	Authorized officer Telephone No.

Form PCT/ISA/210 (second sheet) (January 2015)

INTERNATIONAL SEARCH REPORT
Information on patent family members

International application No.
PCT/CN2018/086723

Patent document cited in search report	Publication date (day/month/year)	Patent family member(s)	Publication date (day/month/year)
CN 102202919 A	28 September 2011	DE 102008054365 A1	06 May 2010
		EP 2352654 A1	10 August 2011
		WO 2010060492 A1	03 June 2010
		ES 2608760 T3	12 April 2017
		US 2011272916 A1	10 November 2011
		IN 201100309 P2	01 April 2011
CN 201633862 U	17 November 2010	None	
CN 107645101 A	30 January 2018	None	

Form PCT/ISA/210 (patent family annex) (January 2015)