(19) Europäisches Patentamt
European Patent Office
Office européen des brevets

(11) Publication number: **0 066 931**
B1

(12) # EUROPEAN PATENT SPECIFICATION

(45) Date of publication of patent specification: **05.03.86**

(51) Int. Cl.⁴: **B 22 D 29/00**, B 22 D 31/00, B 22 C 5/08

(21) Application number: **82200677.1**

(22) Date of filing: **02.06.82**

(54) **Device for processing sand moulds containing one or more castings.**

(30) Priority: **04.06.81 NL 8102714**

(43) Date of publication of application:
15.12.82 Bulletin 82/50

(45) Publication of the grant of the patent:
05.03.86 Bulletin 86/10

(84) Designated Contracting States:
CH DE FR GB LI NL SE

(56) References cited:
DE-A-2 145 607
FR-A-1 179 890
FR-A-2 380 095
GB-A-1 458 567
GB-A-1 506 532
GB-A-1 545 152
US-A-2 523 258
US-A-4 231 414

(73) Proprietor: **DANSK INDUSTRI SYNDIKAT A/S**
Herlev Hovedgade 17
DK-2730 Herlev (DK)

(72) Inventor: **Voorneveld, Jan Theodorus**
24 Zichtweg
NL-2151 WH Nieuw-Vennep (NL)

(74) Representative: **Cammel, Willem Frans et al**
OCTROOIBUREAU ARNOLD & SIEDSMA
Sweelinckplein 1
NL-2517 GK The Hague (NL)

EP 0 066 931 B1

Note: Within nine months from the publication of the mention of the grant of the European patent, any person may give notice to the European Patent Office of opposition to the European patent granted. Notice of opposition shall be filed in a written reasoned statement. It shall not be deemed to have been filed until the opposition fee has been paid. (Art. 99(1) European patent convention).

Courier Press, Leamington Spa, England.

Description

The invention relates to a device for processing sand moulds containing one or more castings in order to separate the castings from the mould sand, to cool them and to condition the mould sand for re-use, said device mainly comprising a horizontal drum rotatably supported by wheels and having an inlet and an outlet opening and at least two annular rolling surfaces arranged around the drum for ground wheels bearing on a foundation, at least one of said wheels being driven.

Such a device as set forth above is known from GB—A—1.545.152.

The invention has for its object to improve said device in a sense such that said axial inlet opening of the drum in the embodiment described above is improved so that mould pieces can be introduced without disturbance.

According to the invention a substantially horizontal supporting surface is arranged in the axial inlet opening of the drum, to the lower side of said opening is suspended a skirt extending closely to the drum wall. Owing to said skirt the axial length of the supporting surface can be reduced so that the mould pieces can drop earlier into the drum without an outflow of material on the underside of the supporting surface. Moreover the drum can contain a bigger charge now.

In an improved form the upper rim of the skirt is upwardly inclined near the rising side of the drum away from the centre in order to further prevent said undesirable outflow.

Preferably the supporting surface and the skirt form part of a suction box in front of the inlet of the drum. Thus suction of undesirable air neat the inlet opening from outside the drum is avoided so that cooling of air aspired through the inlet opening in the drum is improved.

A further embodiment of the device is distinguished in that the medium longitudinal plane of the ground wheels going through the centre of the drum is shifted at the driven side through a given angle in the direction of rotation of the drum with respect to the vertical going through said centre.

In this way an improved distribution of weight on the driven wheels is obtained because as a result of the rotation of the drum the load has a-symmetrically spread therein. Therefore, in the event of multiple wheel drive the power transfer through the wheels may be the same.

If for each rolling surface at least two ground wheels are individually driven, each motor or transmission casing is connected with the foundation through a buffer in accordance with the invention. This provides the advantage that discrepancies of speed of the ground wheels due to the unavoidable non-circularity of the rolling surfaces are absorbed by the buffers. In this way a uniform enagagement of the wheels with the rolling surface is ensured despite the difference in speed, which is conductive to the smoothness of the power transfer.

A simple construction is obtained when the buffer is designed in the form of a reaction arm.

If two ground wheels individually driven by a motor are journalled in each rocking frame, it is preferred in accordance with the invention to connect the reaction arms near the same point of engagement with the foundation so that the rocking frame or bogie is prevented from being pulled out of square and correct tracking of the wheels of the drum is ensured.

In order to avoid reactive forces on the foundation, when the drum is standing still or put out of operation, said forces being due to temperature differences, there is arranged, in accordance with the invention, a reaction member between the opposite wheels of two rolling surfaces, said member being preferably formed by a coupling rod via the wheels so that the foundation is relieved. Consequently the foundation may be of a relatively light structure.

It is preferred in this case to provide the wheel or the bogie axles on both sides with elastic axial buffers in order to absorb minor shifts without producing a reactive force on the foundation.

In order to facilitate a displacement in one direction to a greater extent than in the other direction, the elasticities of the buffers on both sides of each wheel are different.

In order to reduce maintenance and to obtain adequate sound and shock absorption it is preferred to construct the wheels in the form of rollers of synthetic resin, for example, polyurethane.

It is then preferred to insulate the annular rolling surfaces with respect to the drum jacket so that the longevity of the synthetic resin rollers is raised owing to the reduced thermol load.

In further embodiment of the device the annular rolling surfaces are formed by a circular rolling plate, one or more spacers being arranged between the plate and the drum wall, whilst an insulating material is sandwiched between the plate and the drum wall. Thanks to this construction the conduction heat or the radiation heat respectively is appreciably reduced. According to a further step the insulation should terminate at a given distance from the drum wall so that a cooling gap is left. In order to obtain, apart from a "cool" rolling ring, a robust structure, the spacers are formed by annular plates locally connected with the drum wall.

In order to raise the strength of the construction the drum wall is thickened at the area of the annular rolling surface, said thickened part may be built up, in particular at the inlet side of the drum, from more than one layer in order to reduce conduction heat from the interior across the drum wall. Each layer may be made from the appropriate material.

In a further emodiment, the device is provided with spray means in the drum for spreading a cooling fluid, said spray means being subdivided into separately controllable sections. In this manner conditioning of the mould sand can be more accurately controlled.

In order to improve the possibility of checking a passage is provided in the drum wall near the last spray section. Through said passage can flow mould sand, the rate of flow being determinative of the humidity of the mould sand. Thus at each revolution a mould sand sample is obtained, which can be checked for the desired condition so that in the event of a deviation the spray sections can be adjusted.

In order to avoid clogging of the pasage an agitator is arranged on the inner side of the drum, preferably in the form of a pivotable flap, the pivotal axis of which is axially directed. Moreover the pivotal shaft is disposed on the front side of the flap with respect to the direction of rotation so that the flap is self-cleaning and disengages any castings or mould sand near the passage.

It is preferred to arrange monitoring means in the path of the passage and outside the drum, preferably in the form of a temperature meter, a humidity meter or a sensor assessing the presence of mould sand.

In a further embodiment, the end part of the drum is constructed near the axial outlet orifice in the form of a sieve wall.

At a distance from the sieve wall, on the outer side of the drum, sand collecting members are preferably arranged for shedding the sand back to the sieve wall during the rotation of the drum. In this way the mould sand is additionally cooled off.

The sand collecting elements are preferably formed by a unilaterally opened, circular tray equipped with blades.

The depth of the tray is smaller than the length of the sieve wall so that at the beginning the sand is each time conveyed back, but after the passing of the tray it is removed from the drum through the sieve wall.

The sieve wall is preferably provided on the inner side with catching members which carry along the castings through a given angle so that, when the castings are dropping down, a cleaning effect is obtained.

Furthermore the sieve wall is equipped on the inner side near the outlet orifice of the drum with a threshold which ensures a final separation between castings and mould sand.

In order to provide a simple deliverance a delivery belt conveyor is axially arranged beneath the drum so that sand emanating from the sieve wall, the passage or the inlet orifice respectively can be removed by the same belt conveyor.

The invention will be described more fully with reference to embodiments and some alternatives.

The drawing shows in:

Fig. 1 a perspective front view of a device embodying the invention,

Fig. 2 a front view taken on the line II—II in fig. 1,

Fig. 3 a perspective plan view of an alternative embodiment of the wheel set drive,

Fig. 4 an elevational view in the direction of the arrow IV in fig. 3,

Fig. 5 a side elevation of a driven wheel set and a non-driven wheel set respectively with a reaction member arranged in between,

Fig. 6 a sectional view of a rolling ring taken on the line VI—VI in fig. 1,

Fig. 7 a perspective front view in the direction of the arrow VII in fig. 1 of the inlet opening of the device,

Fig. 8 a vertical sectional view taken on the line VIII—VIII in fig. 7,

Fig. 9 a perspective rear view in the direction of the arrow IX in fig. 1 of the inlet opening, part of the drum wall being broken away,

Fig. 10 a perspective view of a detail of the drum wall with the passage in the direction of the arrow X in fig. 1,

Fig. 11 a detail of the passage with a flap on the inner side of the drum wall,

Fig. 12 a schematic, axial view of the flap of fig. 11,

Fig. 13 a perspective rear view of the delivery end of the drum in the direction of the arrow XIII in fig. 1,

The device illustrated in the figures mainly comprises a drum 1, the beginning 1a of which is cylindrical and the rear part 1b of which is tapering to the rear. Concentrically with the drum are arranged two rolling rings 2, the construction of which will be described more fully hereinafter. The rolling rings are bearing on ground wheels 3, which are driven at the front by a motor 4 with a transmission casing 5. The drive is such that the drum rotates in the direction of the arrow P 1.

The wheel sets 3 are journalled in foundations 6 bearing on a floor 7. The floor has a recess for accomodating a conveyor belt 8, the upper run of which moves in the direction of the arrow P.2

At the front the drum 1 has an inlet opening 9, around which is disposed a suction box 10. Suction is performed by a suction set 11. The products P to be processed are fed from a conveyor belt 12, the upper run of which moves in the direction of the arrow P3.

The construction of the inlet opening is described more fully hereinafter. At the outlet opening is also arranged a delivery conveyor 13, the upper run of which moves in the direction of the arrow P 4. The end part of the drum is constructed in the form of a sieve wall, which end part will be described hereinbelow.

Fig. 2 illustrates one of the preferred features of the invention, that is to say, the medium longitudinal plane perpendicular to the plane of the drawing, designated by the line L—L is at an angle to the vertical indicated by the line V—V. This angle is located on the side of the plane L—L to which the direction of rotation of the drum P 1 is directed. This disposition serves to ensure that the load formed by mould sand and castings indicated by the line 15 is mainly located on the left-hand side of the plane V—V. Therefore, by disposing the left-hand wheel set more to the left than the centre an improved distribution of weight on the wheels is obtained. This improved weight distribution is to the benefit of the transferred driving power on the drum.

In the embodiment shown each wheel set 3 is formed by two rollers, preferably, of synthetic

resin, for example, polyurethane having a smooth, cylindrical outer jacket. To the axle of each wheel is fastened in freely rotatable manner a transmission casing 5 with a coupled motor 4. To the transmission casing 5 is fastened a reaction arm 16, to the end of which is pivoted a buffer 17. The buffer 17 bears on the foundation beam 6.

The buffer 17 ensures that the reaction arm 16 can perform a given angular rotation with espect to the axis of the wheel 3 so that any non-circularity of the rolling ring 2 does not affect the drive. If the reaction arm 16 were rigidly secured to the foundation 6 the transmission will be subjected to high forces and there would be a risk of slip between the ground wheel 3 and the ring 2.

For axially locking the drum a guide wheel 18 is arranged on both sides of the rolling ring 2 so as to be rotatable in the foundation beam 6. Such a guide wheel 18 lies beyond the scope of the invention.

Figs. 3 and 4 show an alternative embodiment of the driven ground wheels 3, which are pairwise arranged in a rocker 20. Each ground wheel is driven by the motor 4 through the transmission casing 5. The motor 4 and the transmission casing 5 are also coupled with the rocker 20. The rocker is rotatable about the shaft 21 which is parallel to the wheel axles and which is journalled in the foundation 6.

In order to meet the non-circularity of the rolling ring 2 each transmission casing 5 is provided with a reaction arm 16, which is connected through a coupling rod 22 with the foundation 6 (see fig. 4). For the two reaction arms 22 the point of connection lies on the same line parallel to shaft 21 and symmentrical to the standing midplane so that the rocker is prevented from getting out of square with respect to the rolling ring 2, during the drive thereof. In this embodiment the rocker is also provided with two guide wheels 18, on both sides of the rig 2, which has the same function as in the embodiment described above. It will be obvious that such a rocker construction is appropriate for particularly heavy drums capable of taking a heavy load. When the device is put out of operation, for example, for cleaning or repair purposes, the drum has to cool down to the normal ambient temperature. Ths brings about shrinkage of the drum, which can be compensated for in a conventional manner by rotating the drum after some interval so that the wheels 3 can match the varying longitudinal distance between the rolling rings 2. However, this rotation of the drum requires an accurate watch of the maintenance personel and a high power and therefore it is proposed to arrange a reaction member 23 between the axles of the wheels 3 located opposite one another and rolling along the relatively spaced rolling rings 2. It is thus ensured that the distance between the wheel axles does not vary so that the foundation plate 6 will not be exposed to an excessive load (see fig. 5).

It is preferred for the right-hand wheel 3 of fig. 5 to be able to perform a slight axial shift with respect to the axle. Between the wheels 3 is arranged an axial buffer 24, 25 the inner axial buffers 5 have different elasticity with respect to the outer axial buffers 24. In this manner an inward displacement of the wheels can, indeed, be performed, but an outward displacement is more difficult.

It should finally be noted that the right-hand wheels 3 of fig. 5 are not driven and are freely rotatable on an axle.

Fig. 6 shows an embodiment of a rolling ring 2 consisting of a relatively thick top plate 30 fastened at both ends in radially directed, annular plates 31. The plates 31 are locally fastened to the wall 32 of the drum 1, which is indicated in Fig. 2 at 33.

On the side facing the drum wall 32 the plates 31 are interconnected by a filling plate 34 so that insulating material 35 can be inserted between the plate 34 and the plate 30.

Near the ring 2 the drum wall 32 consists of three layers which not only locally strengthen the drum wall, but also have an insulation function for the heat transfer from the drum across the drum wall to the outside. By the plate 34 a gap-shaped space is maintained between the insulating material 35 and the drum wall 32, through which additional cooling is obtained. By this construction it is ensured that the outer plate 30 remains relatively cool, which enhances the lifetime of the synthetic resin wheels 3.

Figs. 7, 8 and 9 relate to the inlet opening at the front of the device of fig. 1. The inlet opening is located in an axial end surface of the drum 1 and is formed by a ring 40, which is fastened to the head-end of the drum wall. Into the opening 9 extends a supporting plate 41 of rellatively small length, to the lower side of which is fastened a skirt plate 42. The skirt plate 42 is located inside the drum and extends up to the inner side of the drum jacket i.e. beyond the inner edge of the ring 40 (see fig. 8). On the outer side the supporting plate 41 is adjoined by the feeding conveyor 12 for feeding the products to be processed. Above the end part of the feeding conveyor 12 and the supporting plate 41 is arranged a suction box 10, which is closed on all sides with the exception of parts near the inlet opening 9 and the inlet opening 43 for the products and which is provided at the top with a suction pipe 44. The inlet opening 43 is partly closed by hanging flaps 45.

Fig. 9 clearly shows that the skirt plate 42 covers a large part of the underside of the inlet opening 9 and closes the same. In order to avoid loss of load during the rotation of the drum in the direction of the arrow P1, the upper rim 46 of the plate 42 is upwardly inclined in order to adapt it to the talus angle of the load in the drum.

Owing to this skirt plate the load can get further towards the inlet opening 9 so that the length of the supporting plate 41 can be reduced, which prevents jamming of the products P supplied on the belt 12. Further the rate of charging can be raised.

Figs. 10, 11 and 12 show a passage 50 in the drum wall, which serves to allow batches of

mould sand to pass so that at this area the condition of the mould sand can be checked.

The passage 50 is partly covered on the inner side by an agitator 51, which is pivotally fastened to the inner side of the drum wall by means of an axially directed pivotal shaft 52. With respect to the direction of rotation P1 the pivotal shaft 52 is arranged at the front of the flap-like agitator 51.

The width of the agitator 51, measured in an axial sense, is smaller than the width of a passage 50, which ensures that sand can flow out via the flap 51 through the outlet opening 50 even if it is in the closed state as shown in fig. 11.

Out of this closed state in fig. 11 the agitator 51 will turn inwardly at a further rotation of the drum (see fig. 12) so that any sticking castings G are struck loose from the passage 50 so that the casting drops down.

From fig. 10 it is apparent that near the rotary path of the passage 50 means 53 are provided for assessing, for example, the temperature, the humidity or the presence of the mould sand near said part of the drum. If the sand can readily flow, which indicates that it is too dry, the sand can be wetted by spraying means 54 extending inside the drum (see fig. 1)

Preferably these spraying means 54 are divided into controllable sections, three of which are shown in fig. 1, so that it is possible to ensure the conditioning of the mould sand in each part of the drum.

If no sand is passing through the passage 50, this is indicative of too high a humidity. The spray section of the spray means 54 associated with the passage 50 are then shut off. The spray means can be automatically controlled by the monitoring means 53 through an electronic or electric circuitry (not shown).

Fig. 13 shows the outlet end of the drum 1, which end is mainly formed by a sieve wall 14. This sieve wall has such a structure that the mould sand can be readily removed, whilst the castings remain in the drum. Thus the castings and mould sand are separated from one another.

Around the beginning of the sieve wall 14 is arranged a sand collecting member 60 consisting of an annular outer wall 61 and a closed wall 62 at the front, whereas the sand collecting member is open on the side directed to the rear. Between the plate 60 and the sieve wall 14 blades 63 are arranged in any number; in this case they form each a quadrant.

As soon as sand flows out at the beginning of the sieve wall 14 it is collected in the tray 60, carried along by the blades 63 and conducted back through the sieve wall 14 into the drum. Thus the mould sand is redistributed and is cooled by the continuous cooling air flow in the direction of the arrow P5 produced by the suction means 11 at the inlet opening 9. If the mould sand is too wet, it can also be additionally dried. The castings are caught by catching members 64 on the inner side of the sieve wall 14, the castings being moved through a given angle and dropped down. The impact of the castings will each time have a cleaning effect.

Finally an annular threshold 65 near the outlet opening of the drum prevents mould sand from emerging through the opening in the head face of the drum.

The products are finally shed by the catches 64 onto the beginning of the delivery belt 13 so that they can be conducted away.

The invention is not limited to the embodiment described above.

CLAIMS:

1. A device for processing sand moulds containing one or more castings in order to separate the castings from the mould sand, to cool them and to condition the mould sand for re-use, said device comprising a horizontal drum rotatably suported by wheels and having an axial inlet (9) and an axial outlet opening characterized in that into the said inlet opening (9) of the drum (7) extends a substantially horizontal supporting surface (41) to the underside of which is fastened a skirt (42) extending up to near the drum wall.

2. A device as claimed in claim 1, characterized in that the supporting surface (41) and the skirt (42) form part of a suction box (10) in front of the inlet orifice (9) of the drum (1).

3. A device as claimed in claims 1 and 2, characterized in that to the upwardly extending side of the drum (1) the skirt (42) has a rim (46) upwardly inclined from the centre.

4. A device as claimed in claim 1, whereas at least two annular rolling surfaces are arranged around the drum for the ground wheels journalled on a foundation, at least one wheel being driven, characterized in that the medium longitudinal plane L—L of the ground wheels (3) going through the centre of the drum is shifted on the driven side through a given angle α in the direction of rotation (P1) of the drum (1) with respect to the vertical V—V going through said centre.

5. A device as claimed in claim 4, characterized in that on each rolling surface (2) at least two ground wheels (3) are individually driven, each motor (4) or transmission (5) casing being connected with the foundation through a buffer.

6. A device as claimed in claims 4 or 5, characterized in that the buffer (17) is constructed in the form of a reaction arm (16, 22).

7. A device as claimed in claims 5 or 6, characterized in that two ground wheels (3), individually driven by a motor (4) are journalled in a rocking frame (20) and the reaction arms (22) are connected with the foundation near the same point of engagement.

8. A device as claimed in anyone of the preceding claims characterized in that a reaction member (23) is arranged between the opposite wheels (3) or wheel-bogies (20) of two rolling surfaces (2).

9. A device as claimed in claim 8, characterized in that the wheel (3) or bogie axles (21) are provided on both sides with elastic, axial buffers (24, 25).

10. A device as claimed in claim 9, characterized in that the elasticities of the buffers (24, 25) on both sides of the wheel (3) or bogie (20) are different.

11. A device as claimed in claim 1, characterized in that each wheel (3) consists of one or more rollers of synthetic resin, for example, polyurethane.

12. A device as claimed in claim 11, characterized in that the annular rolling surfaces (2) are insulated from the drum jacket (32).

13. A device as claimed in claim 11 and 12 characterized in that the annular rolling surface (2) is formed by a circular rolling plate (30) with one or more spacers (31) to the drum wall (32), insulating material (35) being sandwiched between the rolling plates (30) and the drum wall (32).

14. A device as claimed in claim 13 characterized in that the insulation (35) terminates at a given distance from the drum wall (32).

15. A device as claimed in claims 13 and 14, characterized in that the spacer (31) is formed by an annular plate locally connected with the drum wall (32).

16. A device as claimed in anyone of claims 11 to 15 characterized in that at the area of a rolling surface (2) the drum wall (32) is thickened.

17. A device as claimed in claim 16 characterized in that the thickened part (32) of the drum wall is formed by more than one layer.

18. A device as claimed in claim 1, whereas spray means are arranged inside the drum for spraying a cooling fluid characterized in that the spray means (54) are subdivided into relatively separated, controllable sections.

19. A device as claimed in claim 18 characterized in that a passage (50) is provided in the drum wall near the last spray section with respect to the direction of flow in the drum (1).

20. A device as claimed in claim 19 characterized in that an agitator (51) is arranged on the inner side of the drum wall near said passage (50).

21. A device as claimed in claims 19 and 20, characterized in that the agitator (51) is formed by a pivotable flap.

22. A device as claimed in claims 18 to 20 characterized in that the pivotal shaft (52) of the flap (51) is axially directed with respect to the drum (1) and is located at the front of the flap (51) with respect to the direction of rotation (P1) of the drum (1).

23. A device as claimed in anyone of claims 18 to 22 characterized in that monitoring means (53) are arranged along the path of the passage (50) and on the outer side of the drum wall.

24. A device as claimed in claim 23 characterized in that the monitoring means (53) are formed by a temperature meter.

25. A device as claimed in claim 23 characterized in that the monitoring means (50) are formed by a humidity meter.

26. A device as claimed in claim 23 characterized in that the monitoring means (50) are formed by a sensor assessing the presence of mould sand.

27. A device as claimed in claim 1 characterized in that near the axial outlet opening the drum wall is constructed in the form of a sieve wall (14).

28. A device as claimed in claim 27 characterized in that sand collecting means (60) are arranged at a distance from the sieve wall (14) on the outer side of the drum (1).

29. A device as claimed in claims 27 and 28, characterized in that the sand collecting means (60) are formed by a unilaterally opened, circular tray (61, 62) equipped with blades (63).

30. A device as claimed in claims 27 to 29, characterized in that the depth of the tray (61, 62) is smaller than the length of the sieve wall (14).

31. A device as claimed in claims 27 to 30, characterized in that catching members (64) are arranged on the inner side of the sieve wall (14).

32. A device as claimed in claims 27 to 31, characterized in that an inwardly extending threshold (65) is arranged near the end rim of the sieve wall (14).

33. A device as claimed in anyone of the preceding claims characterized in that a delivery belt conveyor (13) is arranged in the direction of length of and underneath the drum (1).

Patentansprüche

1. Vorrichtung zum Behandeln von ein oder mehrere Gussstücke enthaltenden Sandformen, um die Gussstüche vom Formsand zu trennen, sie zu kühlen und das Formsand für Wiederverwertung zu konditionieren, welche Vorrichtung eine von Rädern drehbar unterstützte waagerechte Trommel sowie eine achsenförmige Einlauf- (9) und eine achsenförmige Auslauföffnung umfasst, dadurch gekennzeichnet, dass sich in die Einlauföffnung (9) der Trommel (7) [sollte wohl korrekt "(1)" sein.] eine im wesentlichen waagerechte Stützfläche (41) erstreckt, an deren Unterseite eine sich dicht bis zur Trommelwand erstreckende Schürze (42) befestigt ist.

2. Vorrichtung nach Anspruch 1, dadurch gekennzeichnet, dass die Stützfläche (41) und die Schürze (42) vor der Einlauföffnung (9) der Trommel (1) einen Teil eines Saugkastens (10) ausmachen.

3. Vorrichtung nach den Ansprüchen 1 und 2, dadurch gekennzeichnet, dass die Schürze (42) an der sich aufwärts erstreckenden Seite der Trommel (1) einen vom Zentrum nach oben ansteigenden Rand (46) aufweist.

4. Vorrichtung nach Anspruch 1, worin mindestens zwei ringförmige Laufflächen um die Trommel herum für die auf einem Gestell gelagerten Stützräder angeordnet sind, und worin mindestens eines der Räder getrieben wird, dadurch gekennzeichnet, dass die durch das Zentrum der Trommel verlaufende mittlere Längsebene L—L der Stützräder (3) im Verhältnis zu der durch das erweähnte Zentrum verlaufenden senkrechten Ebene V—V auf der getriebenen

Seite durch einen gegebenen Winkel α in die Drehrichtung (P1) der Trommel verschoben wird.

5. Vorrichtung nach Anspruch 4, dadurch gekennzeichnet, dass jede Lauffläche (2) mindestens zwei individuell getriebene Stützräder (3) aufweist, worin jeder Motor (4) oder jedes Transmissionsgehäuse (5) durch einen Puffer mit dem Gestell verbunden ist.

6. Vorrichtung nach Anspruch 4 oder 5, dadurch gekennzeichnet, dass der Puffer (17) in Form von einem Reaktionsarm (16, 22) gestaltet ist.

7. Vorrichtung nach den Ansprüchen 5 bis 6, dadurch gekennzeichnet, dass zwei von einem Motor (4) individuell getriebene Stützräder (3) in einem ausschwingbaren Rahmen (20) gelagert sind, und dass die Reaktionsarme (22) nahe am selben Eingriffspunkt mit dem Gestell verbunden sind.

8. Vorrichtung nach einem oder mehreren der vorhergehenden Ansprüchen, dadurch gekennzeichnet, dass ein Reaktionsorgan (23) zwischen den gegenüberliegenden Rädern (3) oder Drehgestellen (20) zweier Laufflächen (2) angeordnet ist.

9. Vorrichtung nach Anspruch 8, dadurch gekennzeichnet, das die Achsen des Rads (3) oder des Drehgestells (21) auf beiden Seiten mit elastischen, achsenförmigen Puffern (24, 25) versehen sind.

10. Vorrichtung nach Anspruch 9, dadurch gekennzeichnet, dass die Elastizität der Puffer (24, 25) auf beiden Seiten des Rads (3) oder des Drehgestells (20) verschieden ist.

11. Vorrichtung nach Anspruch 1, dadurch gekennzeichnet, dass jedes Rad (3) aus einer oder mehreren Rollen aus synthetischem Harz, z.B. Polyurethan, besteht.

12. Vorrichtung nach Anspruch 11, dadurch gekennzeichnet, dass die ringförmigen Laufflächen (2) vom Trommelmantel (32) isoliert sind.

13. Vorrichtung nach den Ansprüchen 11 und 12, dadurch gekennzeichnet, dass eine ringförmige Lauffläche (2) aus einer kreisförmigen Rollplatte (30) mit einem oder mehreren sich bis zur Trommelwand (32) erstreckenden Abstandstücken (31) gebildet ist, und worin Isoliermaterial (35) zwischen der Rollplatte (30) und der Trommelwand (32) eingezwängt ist.

14. Vorrichtung nach Anspruch 13, dadurch gekennzeichnet, dass das Isoliermaterial (35) in einem gegebenen Abstand von der Trommelwant (32) endet.

15. Vorrichtung nach den Ansprüchen 13 und 14, dadurch gekennzeichnet, dass das Abstandstück (31) aus einer mit der Trommelwand (32) lokal verbundenen ringförmigen Platte gebildet ist.

16. Vorrichtung nach jeden der Ansprüche 11 bis 15, dadurch gekennzeichnet, dass die Trommelwand (32) am Gebiet der Lauffläche (2) verdickt ist.

17. Vorrichtung nach Anspruch 16, dadurch gekennzeichnet, dass der verdickte Teil der Trommelwand (32) aus mehr als einer Schicht gebildet ist.

18. Vorrichtung nach Anspruch 1, worin Spritzorgane (54) zum Spritzen einer kühlenden Flüssigkeit inwendig in der Trommel angeordnet sind, dadurch gekennzeichnet, dass die Spritzorgane (54) in verhältnismässig unterschiedenen, regulierbaren Sektionen unterteilt sind.

19. Vorrichtung nach Anspruch 18, dadurch gekennzeichnet, dass nahe an der letzten Spritzsektion im Verhältnis zur Stromrichtung im Trommel (1) eine Passage (50) in der Trommelwand zuwegegebracht ist.

20. Vorrichtung nach Anspruch 19, dadurch gekennzeichnet, dass an der Innenseite der Trommel dicht an der erwähnten Passage (50) ein Rührwerk (51) angeordnet ist.

21. Vorrichtung nach den Ansprüchen 19 und 20, dadurch gekennzeichnet, dass das Rührwerk (51) aus einer schwingbaren Klappe gebildet ist.

22. Vorrichtung nach den Ansprüchen 18 bis 20, dadurch gekennzeichnet, dass die Drehachse (52) der Klappe (51) im Verhältnis zur Trommel (1) axial verläuft und im Verhältnis zur Drehrichtung (P1) der Trommel (1) an der Vorderseite der Klappe (51) angeordnet ist.

23. Vorrichtung nach jeden der Ansprüche 18 bis 22, dadurch gekennzeichnet, dass in der Längsrichtung der Passage (50) un an der Aussenseite der Trommelwand Ueberwachungsorgane angeordnet sind.

24. Vorrichtung nach Anspruch 23, dadurch gekennzeichnet, dass das Ueberwachungsorgan (53) ein Temperaturmesser ist.

25. Vorrichtung nach Anspruch 24, dadurch gekennzeichnet, dass das Ueberwachungsorgan (50) [sollte wohl korrekt "(53)" sein.] ein Feuchtigkeitmesser ist.

26. Vorrichtung nach Anspruch 23, dadurch gekennzeichnet, dass das Ueberwachungsorgan (50) [sollte wohl korrekt "(53)" sein.] ein Messfühler zum Entdecken vom eventuellen Formsand ist.

27. Vorrichtung nach Anspruch 1, dadurch gekennzeichnet, dass die Trommelwand nahe an der axialen Auslauföffnung als eine Siebwand (14) gestaltet ist.

28. Vorrichtung nach Anspruch 27, dadurch gekennzeichnet, dass Organe (60) zum Aufsammeln von Sand in einem Abstand von der Siebwand (14) an der Aussenseite der Trommel (1) angeordnet sind.

29. Vorrichtung nach den Ansprüchen 27 und 28, dadurch gekennzeichnet, dass das Organ (60) zum Aufsammeln von Sand als eine mit Flügeln (63) einseitig offene kreisförmige Schale (61, 62) gestaltet ist.

30. Vorrichtung nach den Ansprüchen 27 bis 29, dadurch gekennzeichnet, dass die Tiefe der Schale (61, 62) kleiner als die Länge der Siebwand (14) ist.

31. Vorrichtung nach den Ansprüchen 27 bis 30, dadurch gekennzeichnet, dass Greiforgane (64) an der Innenseite der Siebwand (14) angeordnet sind.

32. Vorrichtung nach den Ansprüchen 27 bis 31, dadurch gekennzeichnet, dass eine sich nach

innen erstreckende Schwelle (65) nahe am Endrand der Siebwand (14) angeordnet ist.

33. Vorrichtung nach jeden der hervorgehenden Ansprüche, dadurch gekennzeichnet, dass ein Lieferbandförderer (13) in der Längsrichtung der Trommel und darunter angeordnet ist.

Revendications

1. Dispositif pour traiter des moules de sable contenant une ou plusieurs pièces moulées et destiné à séparer les pièces moulées du sable de moulage, les refroidir, et conditionner le sable de moulage de sorte qu'il puisse être utilisé de nouveau, le dispositif mentionné comprenant un tambour horizontal soutenu de façon à pouvoir tourner par des roues et présentant une entrée axiale (9) et un orifice de sortie axiale, caractérisé en ce qu'une surface d'appui (41) sensiblement horizontale s'étend dans l'entrée (9) mentionnée du tambour (7) [devrait être "(1)"] , un collet (42) étant rattaché à la face inférieure de la surface d'appui (41) et s'étendant jusqu'aux abords immédiats de la paroi du tambour.

2. Dispositif selon la revendication 1 caractérisé en ce que la surface d'appui (41) et le collet (42) font parties d'une caisse d'aspiration (10) devant l'entrée (9) du tambour (1).

3. Dispositif selon les revendications 1 et 2 caractérisé en ce que sur le côté du tambour (1) s'étendant vers le haut le collet (42) est pourvu d'une gante (46) étant incliné du centre vers le haut.

4. Dispositif selon la revendication 1, mais au moins deux surfaces annulaires roulantes sont arrangées autour du tambour pour les roues d'appui qui sont logées sur une fondation, au moins une des roues étant actionnée, caractérisé en ce que le plan longitudinal moyen L—L des roues d'appui (3), lequel plan s'étendant par le centre du tambour, est déplacée sur le côté actionné à travers un angle donné α dans la direction de rotation (P1) du tambour (1) par rapport au plan vertical V—V s'étendant par ledit centre.

5. Dispositif selon la revendication 4 caractérisé en ce que sur chaque surface roulante (2) au moins deux roues d'appui (3) sont actionnées individuellement, chaque moteur (4) ou caisse de transmission (5) étant relié avec la fondation par un tampon.

6. Dispositif selon les revendications 4 et 5 caractérisé en ce que le tampon (17) est construit en forme d'un bras à réaction (16, 22).

7. Dispositif selon les revendications 5 et 6 caractérisé en ce que deux roues d'appui (3), actionnées individuellement par un moteur (4), sont logées dans un châssis à bascule (20) et en ce que les bras de réaction (22) sont reliés avec la fondation près du même point d'engrenage.

8. Dispositif selon l'une quelconque des revendications précédentes caractérisé en ce qu'un élément de réaction (23) est logé entre les roues opposées (3) ou bogies des roues (20) de deux surfaces roulantes (2).

9. Dispositif selon la revendication 8 caractérisé en ce que la roue (3) ou les arbres des bogies (21) sont pourvus sur les deux côtés de tampons axiales et élastiques (24, 25).

10. Dispositif selon la revendication 9 caractérisé en ce que l'élasticité des tampons (24, 25) est différente sur les deux côtés de la roue (3) ou du bogie (20).

11. Dispositif selon la revendication 1 caractérisé en ce que chaque roue (3) est composée d'un ou plusieurs rouleaux de résine synthétique, par exemple polyuréthane.

12. Dispositif selon la revendication 11 caractérisé en ce que les surfaces annulaires roulantes (2) sont isolées de l'enveloppe (32) du tambour.

13. Dispositif selon les revendications 11 et 12 caractérisé en ce qu'une surface annulaire roulante (2) est formée par une plaque circulaire roulante (30) avec une ou plusieurs entretoises (31) du côté de la paroi (32) du tambour, et en ce que de la matière isolante (35) est placée comme un "sandwich" entre la plaque roulante (30) et la paroi (32) du tambour.

14. Dispositif selon la revendication 13 caractérisé en ce que l'isolement (35) se termine à une distance donnée de la paroi (32) du tambour.

15. Dispositif selon les revendications 13 et 14 caractérisé en ce que l'entretoise (31) est formé par une plaque annulaire liée localement avec la paroi (32) du tambour.

16. Dispositif selon l'une quelconque des revendications 11 à 15 caractérisé en ce que dans la région d'une surface roulante (2) la paroi (32) du tambour est rendue plus épaisse.

17. Dispositif selon la revendication 16 caractérisé en ce que la partie épaissie de la paroi (32) du tambour est formée par plus d'une couche.

18. Dispositif selon la revendication 1, mais à l'intérieur du tambour un système arroseur est arrangé pour faire jaillir un liquide réfrigérant, caractérisé en ce que les arroseurs (54) sont subdivisés dans des section réglables et relativement séparées.

19. Dispositif selon la revendication 18 caractérisé en ce qu'un passage (50) est établi dans la paroi du tambour près de la dernière section de pompe par rapport à la direction de l'écoulement dans le tambour (1).

20. Dispositif selon la revendication 19 caractérisé en ce qu'un agitateur (51) est placé sur le côté intérieur de la paroi du tambour tout près du passage (50).

21. Dispositif selon les revendications 19 et 20 caractérisé en ce que l'agitateur (51) est constitué par une trappe pivotable.

22. Dispositif selon les revendications 18 à 20 caractérisé en ce que l'arbre de rotation (52), pivotable, de la trappe (51) s'étend axialement par rapport au tambour (1) et est placé en face de la trappe (51) par rapport à la direction de rotation (P1) du tambour (1).

23. Dispositif selon l'une quelconque des revendications 18 à 22 caractérisé en ce que des

systèmes de contrôle (53) sont arrangés le long du passage (50) et sur le côté extérieur de la paroi du tambour.

24. Dispositif selon la revendication 23 caractérisé en ce que les systèmes de contrôle (53) sont constitués par un appareil de mesure de température.

25. Dispositif selon la revendication 23 caractérisé en ce que les systèmes de contrôle (50) [devrait être "(53)"] sont constitués par un appareil de mesure de l'humidité.

26. Dispositif selon la revendication 23 caractérisé en ce que les systèmes de contrôle (50) [devrait être "(53)"] sont constitués par un capteur établissant la présence de sable de moulage.

27. Dispositif selon la revendication 1 caractérisé en ce que tout près de la sortie axiale la paroi du tambour est construite sous forme d'une paroi à tamiser (14).

28. Dispositif selon la revendication 27 caractérisé en ce qu'un organe (60) pour la récupération du sable est arrangé à une distance de la paroi à tamiser (14) sur le côté extérieur du tambour (1).

29. Dispositif selon les revendications 27 et 28 caractérisé en ce que l'organe (60) pour la récupération du sable est constitué par un plateau (61, 62) circulaire qui est ouvert unilatéralement et qui est muni d'aubes (63).

30. Dispositif selon les revendications 27 à 29 caractérisé en ce que la profondeur de plateau (61, 61) est inférieure à la longeur de la paroi à tamiser (14).

31. Dispositif selon les revendications 27 à 30 caractérisé en ce que des organes d'accrochage (64) sont arrangés sur le côté intérieur de la paroi à tamiser (14).

32. Dispositif selon les revendications 27 à 31 caractérisé en ce qu'un seuil (65) s'étendant vers l'intérieur est arrangé tout près du bord du fond de la paroi à tamiser (14).

33. Dispositif selon l'une quelconque des revendications précédentes caractérisé en ce qu'une courroie transporteuse (13) de livraison est placée dans le sens longitudinal du tambour (1) et au-dessous de celui-ci.

FIG.1

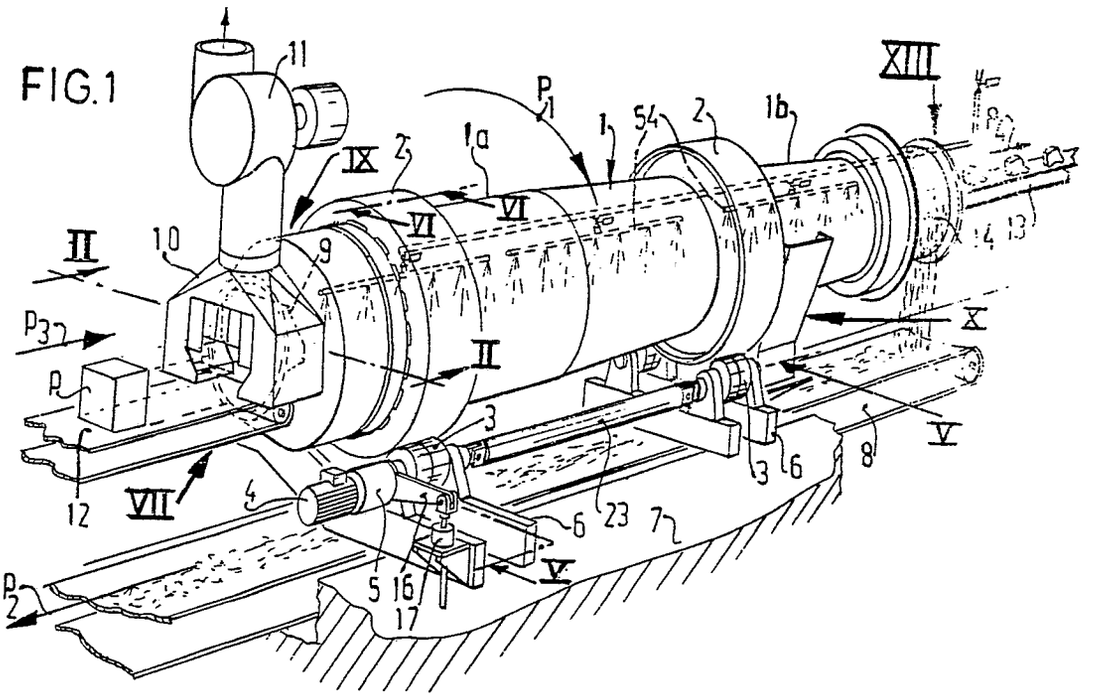
11
P1
1
54
2
1b
XIII
IX
2
1a
VI
VI
II
10
9
P3
P
II
X
V
3
3
6
8
12
VII
4
6
23
7
5
16
17
V
P2

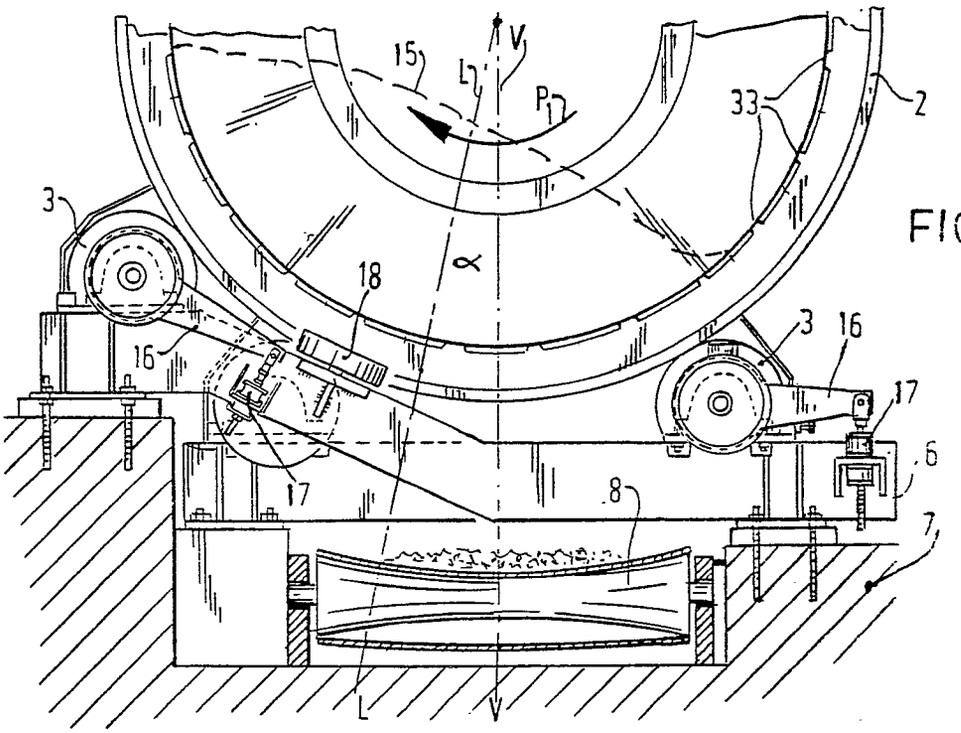
V
15
L
P1
33
2
3
18
α
16
3
16
17
17
6
8
7
L
V

FIG.2

FIG.3

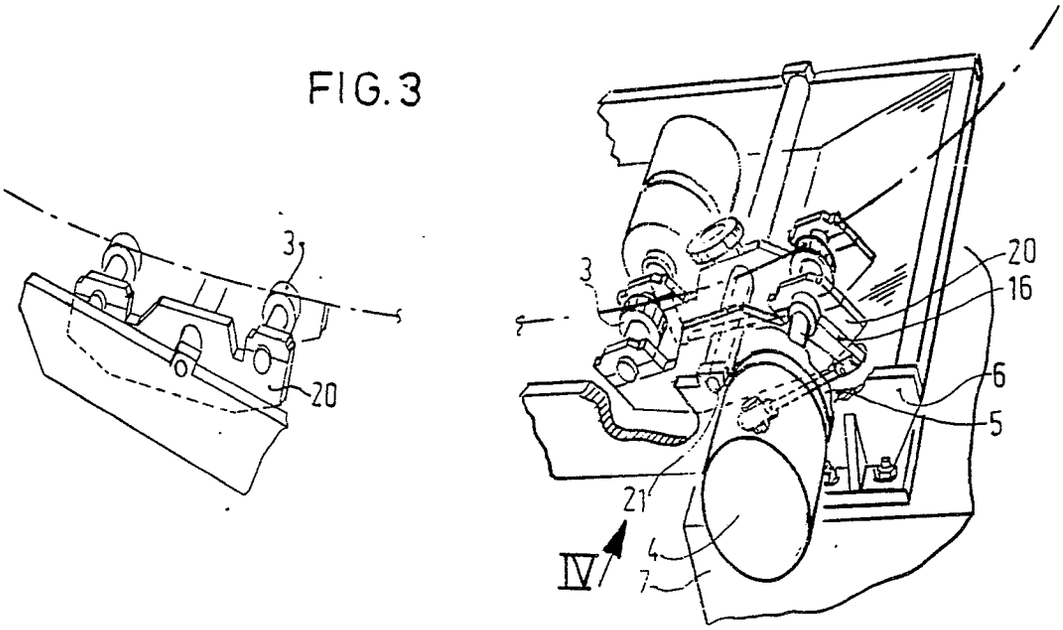

FIG.4

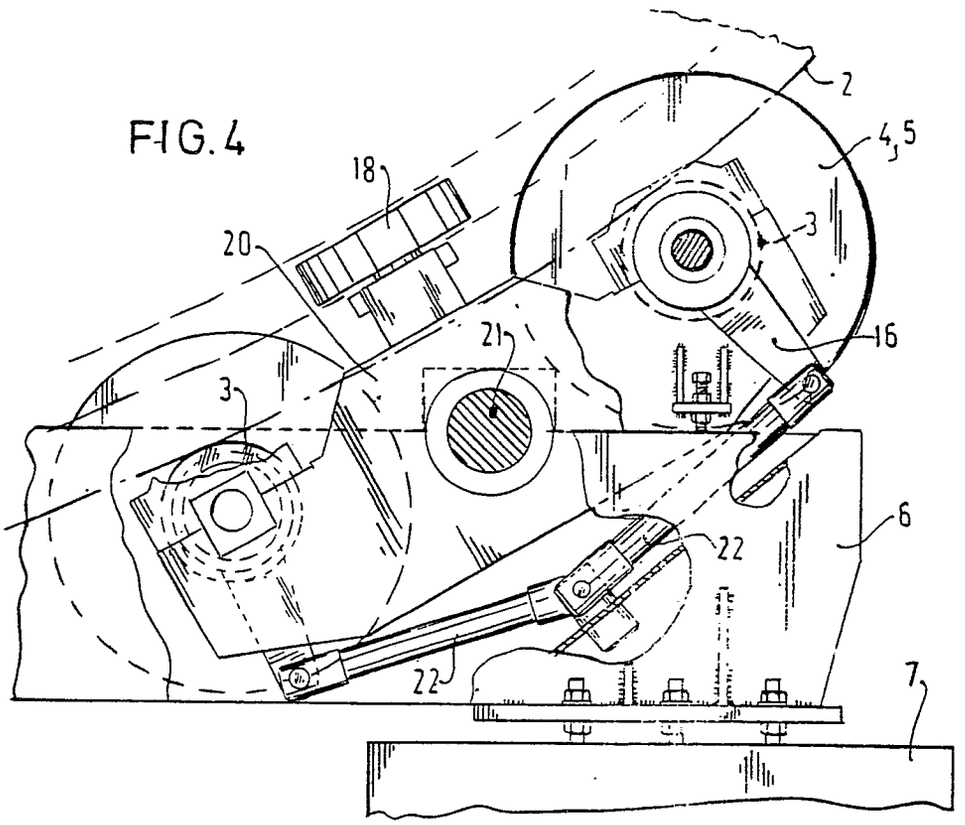

FIG.5

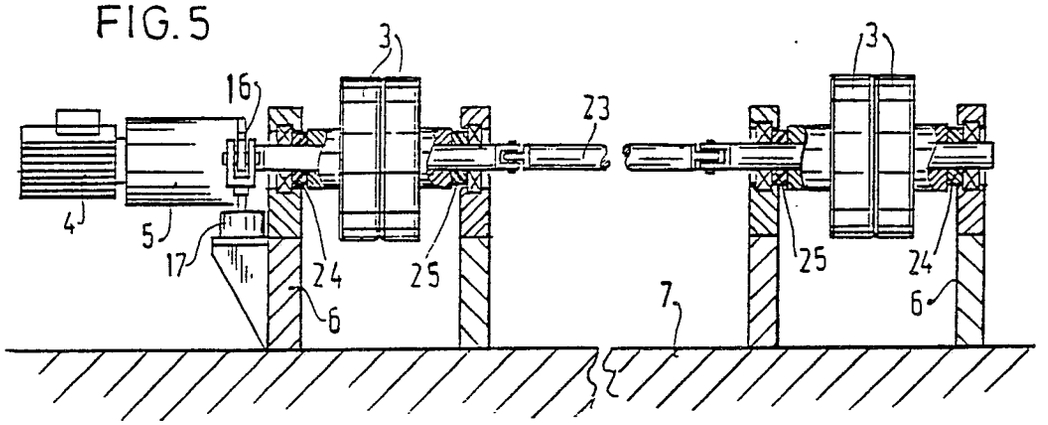

FIG.6

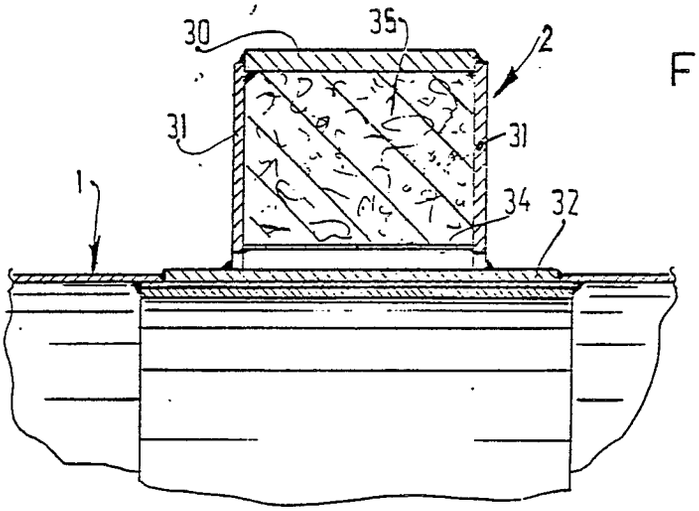

FIG.13

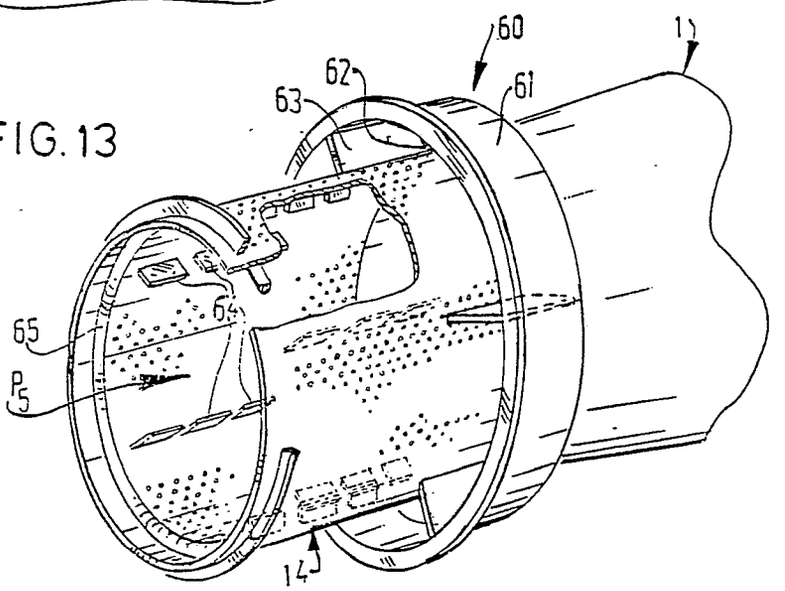

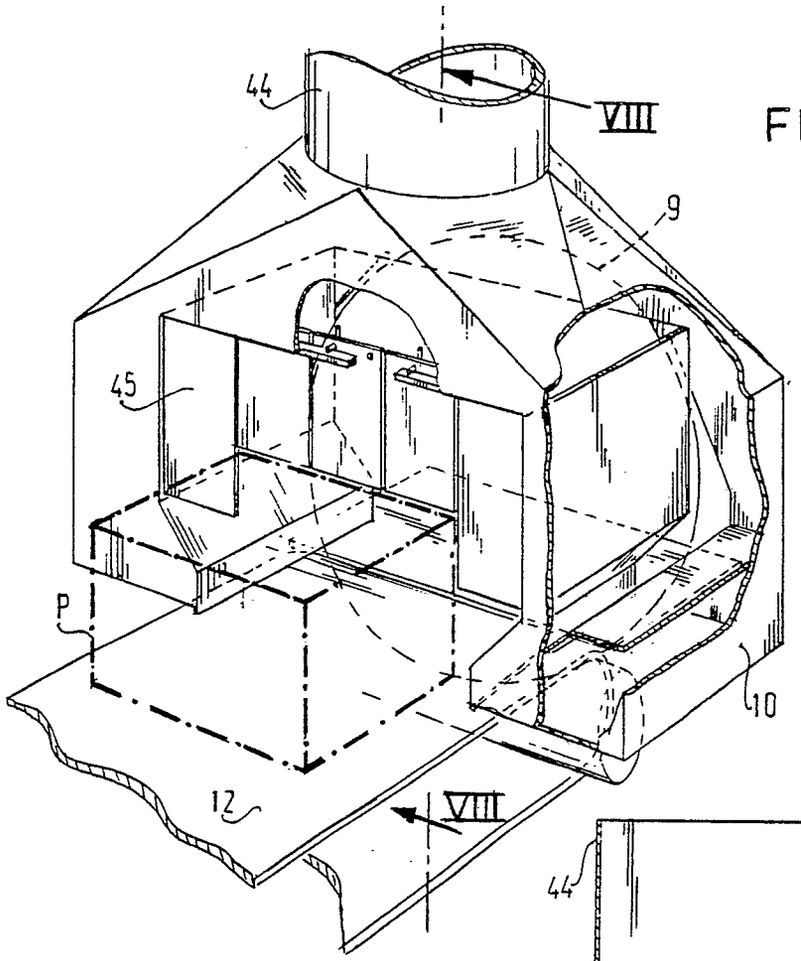

FIG.7

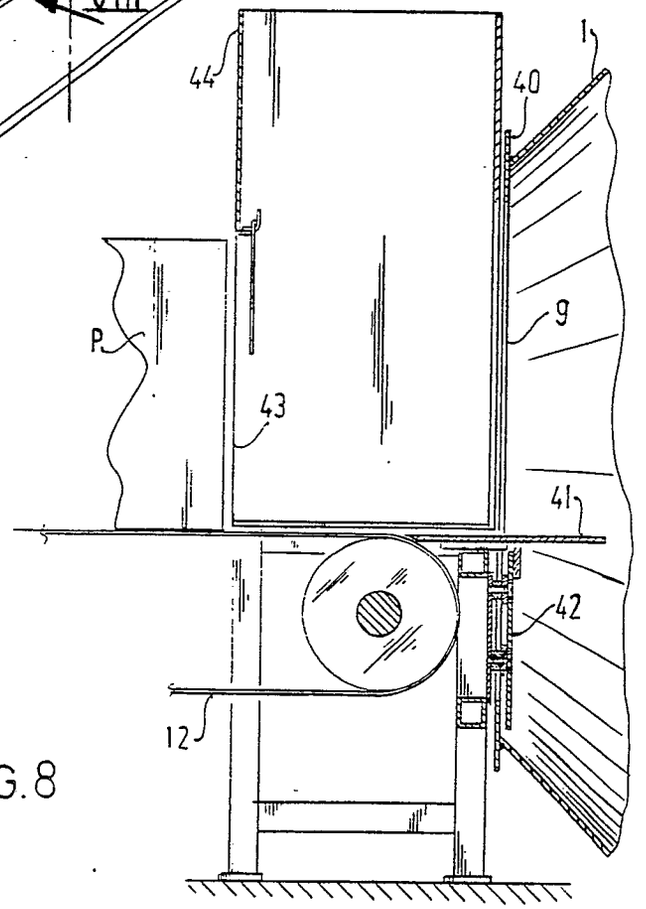

FIG.8

FIG.11

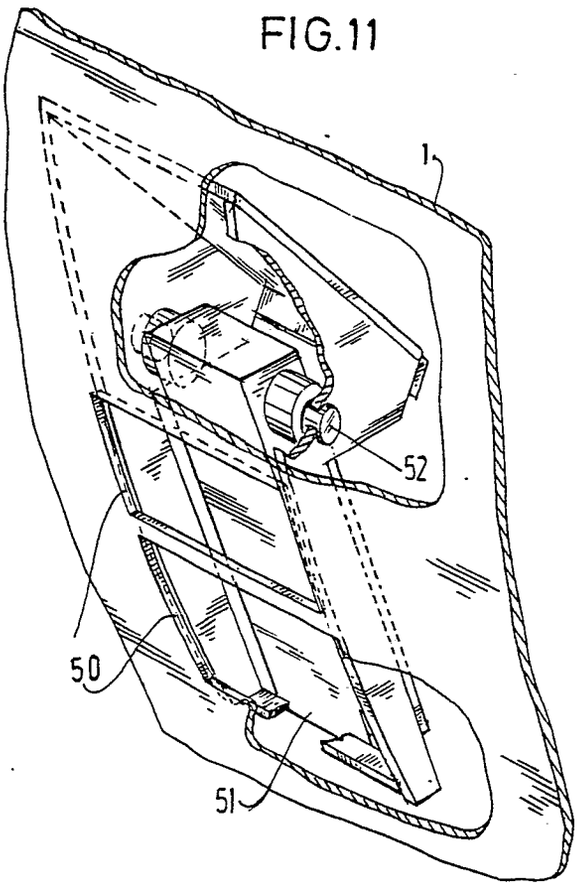

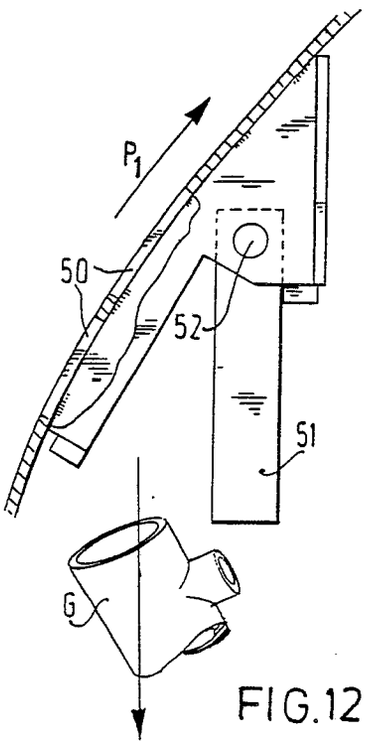

FIG.12

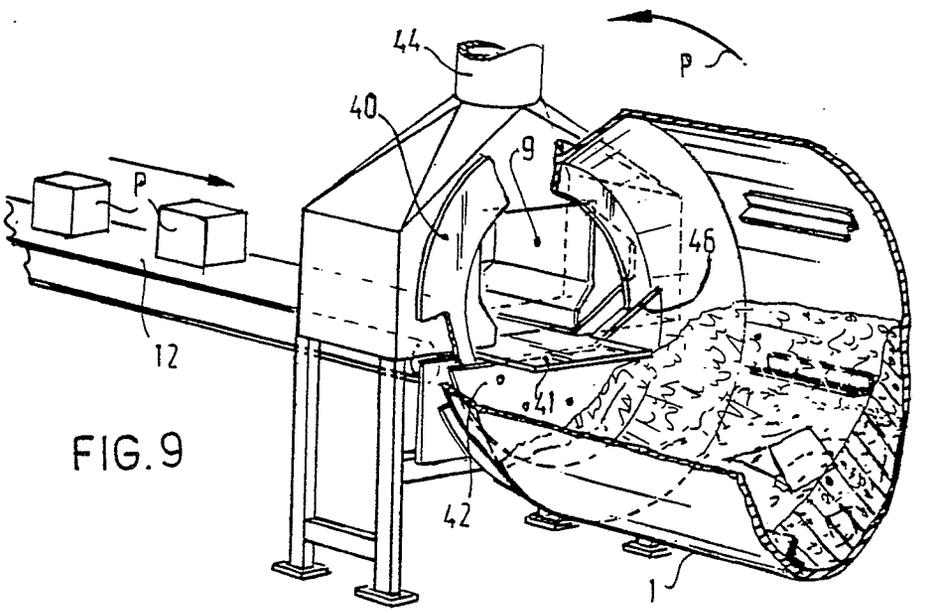

FIG.9

FIG.10

