Nov. 7, 1961 R. C. DORLAND 3,007,284

PRESTRESSED CONCRETE SLABS

Filed April 13, 1954 2 Sheets-Sheet 1

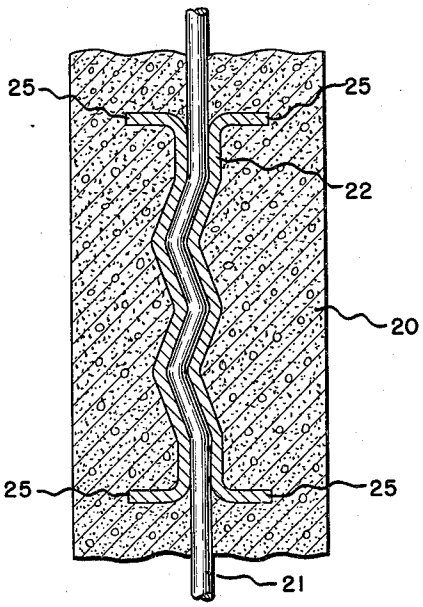

FIG. 1

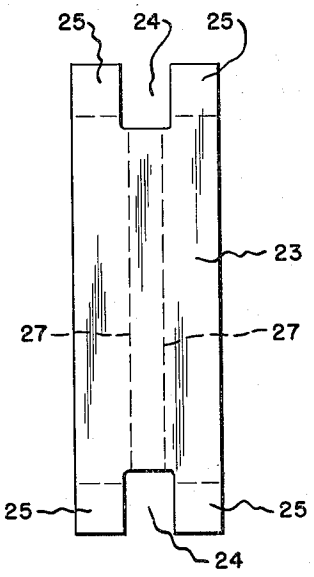

FIG. 2

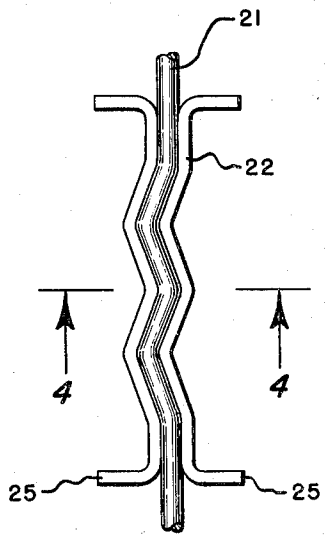

FIG. 3

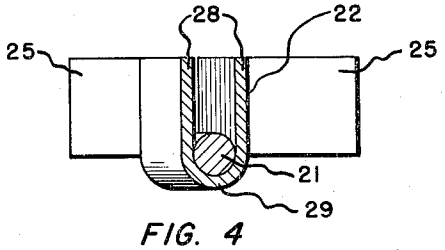

FIG. 4

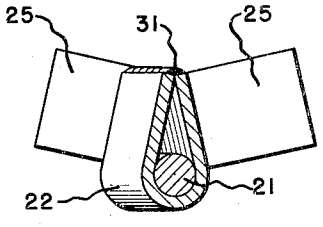

FIG. 5

INVENTOR.
ROBERT C. DORLAND

BY
Fulwider, Mathingly and
Babcock ATTORNEYS

Nov. 7, 1961 R. C. DORLAND 3,007,284

PRESTRESSED CONCRETE SLABS

Filed April 13, 1954 2 Sheets-Sheet 2

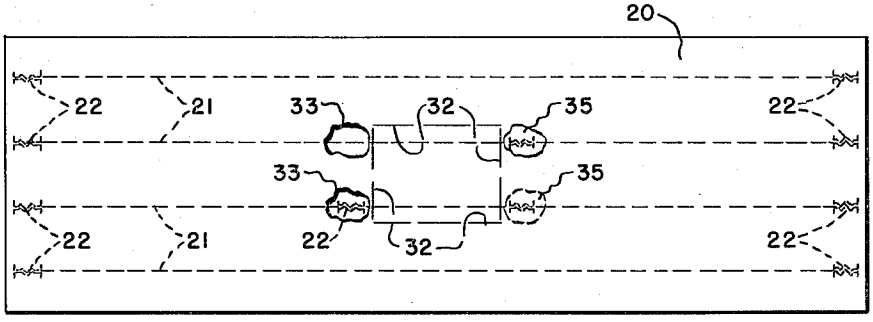

FIG. 6

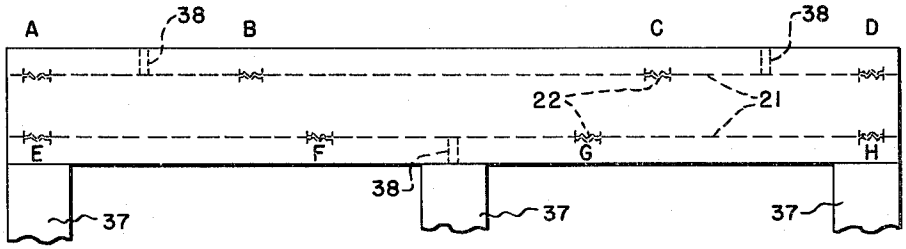

FIG. 7

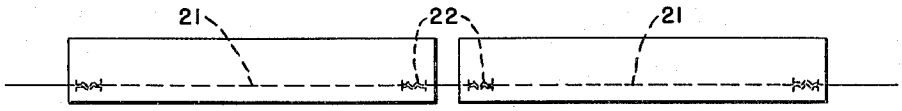

FIG. 8

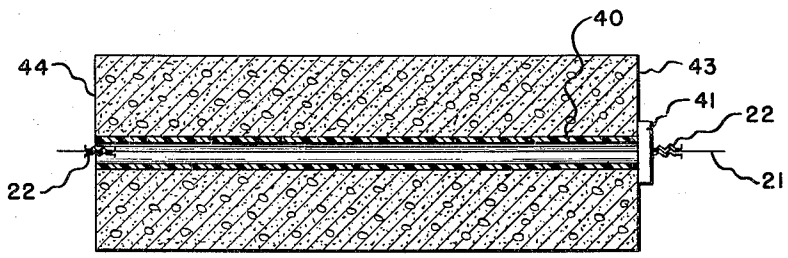

FIG. 9

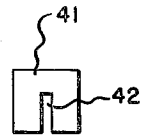

FIG. 10

INVENTOR.
ROBERT C. DORLAND

BY
Dulworth, Mattingly and Babcock ATTORNEYS

United States Patent Office 3,007,284 Patented Nov. 7, 1961

3,007,284
PRESTRESSED CONCRETE SLABS

Robert C. Dorland, San Diego, Calif., assignor to Southwest Structural Concrete Corp., San Diego, Calif., a corporation of California

Filed Apr. 13, 1954, Ser. No. 422,825
5 Claims. (Cl. 50—128)

The present invention relates to prestressed concrete slabs of the type in which a wire or wires are under tension and anchored in such condition in the slab. The present invention is a continuation-in-part of my copending application Serial No. 272,124, filed February 18, 1952, now abandoned.

Under certain circumstances, it is desired to form an opening or a recess in a slab of cured concrete. Quite often the forming of the opening or recess necessitates the severing of the embedded wire or wires. By using my invention, the prestressed condition of the concrete slab can be maintained although it is necessary to sever the wire or wires.

Further objects and advantages will be apparent from the following description, reference being had to the accompanying drawings wherein preferred embodiments of the invention are illustrated.

In the drawings:

FIG. 1 is a fragmentary sectional view through a prestressed concrete slab showing the deformed clip and wire, the wire being shown in elevation;

FIG. 2 is a plan view of the material from which the clip is made;

FIG. 3 is an edge view of the deformed clip and wire;

FIG. 4 is a sectional view taken on line 4—4 of FIG. 3;

FIG. 5 is a sectional view of the clip and the wire, showing the clip further bent and the ends thereof welded to one another;

FIG. 6 is a plan view of a prestressed slab, showing in dotted lines an area which is to be removed from the slab;

FIG. 7 is an elevational view of a concrete beam supported by columns;

FIG. 8 is a view showing two beams of a line of beams in which the wires were pretensioned in a single operation;

FIG. 9 is a sectional view of a beam showing the wire therein prior to being placed under tension; and

FIG. 10 is a view of a bearing plate used in the post-tensioning for the beam shown in FIG. 9.

Referring in detail to the drawings, the concrete slab member 20, wire 21, and clips 22 constitute the principal parts and portions of my prestressed concrete slab reinforcing means. The concrete slab member 20 may be of any form desired, and used for any purpose for which prestressed concrete slabs may be used, such as walls, floors, ceilings, roofs, posts, foundations, tresses, beams, spring or diving boards, etc.

Clip members 22 are placed on the wire 21 and positioned wherever desired along the wire. The wire may be of any conventional form used for prestressed concrete; it may be a single wire or a cable made of many wires.

The clip member 22 is preferably formed out of a single piece of sheet metal 23, as best shown in FIG. 2, with a slot 24 in one or both ends to form ears 25. The sheet metal 23 is bent along the dash lines 27 to form a U-shaped structure, as best shown in FIG. 4. The U-shaped structure will include legs 28 connected by a yoke portion 29. If desirable, the ears 25 can be bent outwardly at any desired angle to form extended wings, providing additional anchorage in securing the clip to the concrete.

In some constructions, it is not necessary to extend these wings or ears and, if desirable, such slot 24 can be eliminated. Some types of construction require two or four of these wings extended, as shown in FIGS. 1 and 3, depending upon several features such as the size of the wire, the stress in the wire, and the characteristics of the concrete.

The legs 28 of the clip are placed in straddling relationship with the wire, and then both the clip and the wire are stamped with a desirable tool into a corrugated form, as is shown in FIG. 3. This stamping securely locks the clip and wire to one another. Under some conditions, it is desirable that the ends of the legs 28 are brought into contact with one another and then welded, as at 31 as shown in FIG. 5. It will be observed that the corrugation of the clip also forms a shape for enhancing the securement of the clip into the concrete, while the extended wings 25 also increase the anchorage.

After the clips are secured to the wire, the wire is stretched by any suitable type of stretching device, producing high tensile stresses in the wire. The concrete is then placed around the wire in any shape desired. After the concrete has reached its desired strength through curing, the stretching device is released allowing the wire to transfer its tensile stresses into the concrete by the clips, thus producing desirable compressive stresses in the concrete. Obviously, additional wires with clips may be placed wherever desired without stretching these wires which form the additional reinforcing.

Under certain circumstances, it is desirable to cut an opening or a recess in, for example, a floor slab or a roof slab or wall, and this opening or recess may intersect the area through which the pressed wires extend. An example of this is shown in FIG. 6, wherein it is desirable to form an opening in the slab. Such opening is shown by the dash lines 32. In practicing the present invention, holes 33 are cut into the slab intersecting the wires 21. These holes 33 are chiseled out prior to the forming of the main opening 32. Clips 22 are then placed on each of the wires; then the holes are re-blocked with concrete 35 after the concrete 35 is fully cured, anchoring the added clips in position; then the opening 32 is cut into the slab. The various stages of this method are shown in FIG. 6. The wires 21 are maintained under tension and, consequently, the prestressed condition of the concrete is also maintained.

It is often desirable to release the prestressed condition of a concrete slab in localized areas and maintain the prestressed condition in certain other areas. It is desirable to release the prestressed condition after the beam or slab is in position, since it is desirable that the entire beam or slab be maintained in prestressed condition during the shaping and handling of the same. FIG. 7 shows such a beam supported by columns 37. For erection stresses it is desirable to have the sections between A through D, and the sections E through H, prestressed for shaping and handling reasons. Then, after this beam is in place, it is desirable to have only the upper section between B and C prestressed, and also sections E to F and G to H prestressed. This can be done by placing the clips as shown and greasing the wire to destroy all bond between the wire and the concrete. Access holes 38 may be cut into the beam through which suitable clippers may be inserted for severing the wires. It is to be understood that the beam had been fully prestressed by the wires under tension. The severing of the wires releases the prestressed condition in the sections A to B, C to D, and F to G, and the prestressed condition is maintained between B and C, E and F, and G and H.

FIG. 8 shows a typical line production of prestressed concerte beams. Clips are first placed along the wire. This wire may be several thousand feet long, the wire

with the clips thereon is stretched, and then the concrete is placed as desired along the line. After the concrete has reached its desired strength through curing, the wire is released from its stretching device and the wires are cut intermediate the adjacent ends of the next adjacent slab. Thus a large number of slabs may be formed in a prestressed condition simultaneously.

Sometimes it is desirable to weld an article in position in the prestressed concrete slab. This article cannot be welded directly to the wire since the wire will lose its desired strength when it is heated to welding temperature. However, such article can be welded to the ends of the legs **28** or to the wings **25**, by one who is skillful, without increasing the temperature of the wire to such a degree as to have a deleterious effect thereon.

The facile manner of applying the clips to the wire is of high advantage in such constructions in which the concrete is molded about a tube. Such construction is shown in FIG. 9 wherein the concrete surrounds a tube **40**. After the slab of concrete has been fully cured, a wire with clips on both ends is threaded through the tube. A bearing plate **41** having a slot **42** is interposed between the end of a clip and the end **43** of a slab. The wire is then stretched and after the wire is stretched to proper tension, a similar bearing plate **41** of proper thickness is interposed between the other clip and the opposite end **44** of the slab.

Other advantages of the present invention lie in the fact that the clip may be placed anywhere on the wire with ease, thus lending itself to mass production of concrete members of various lengths. The clips can be readily placed in position in the field, as previously explained, with respect to FIG. 6. Moreover, the clips in themselves provide sufficient anchorage with the concrete, i.e. the anchorage does not depend upon a bond between the wire and the concrete.

While the forms of mechanism herein shown and described constitute preferred forms, it is to be understood that other forms may be adopted falling within the scope of the claims that follow.

I claim:

1. In combination, a concrete slab and prestressing means therefor, said prestressing means including a wire under tension and extending longitudinally of and within the slab, spaced clips anchored within the slab, said clips each being U-shaped in cross section thereby providing legs and a connecting yoke, the legs of a clip straddling and being contiguous with the wire, said legs and yoke and the wire being bent at an angle transversely of the length of the wire into binding relationship with one another.

2. In combination, a concrete slab and prestressing means therefor, said prestressing means including a wire under tension and extending longitudinally of and within the slab, spaced clips anchored within the slab, said clips each being U-shaped in cross section thereby providing legs and a connecting yoke, the legs of a clip straddling and being contiguous with the wire, said legs and yoke and the wire being corrugated transversely of the length of the wire into binding relationship with one another.

3. In combination, a concrete slab and prestressing means therefor, said prestressing means including a wire under tension and extending longitudinally of and within the slab, spaced clips anchored within the slab, said clips each being U-shaped in cross section thereby providing legs and a connecting yoke, the legs of a clip straddling and being contiguous with the wire, said legs and yoke being compressed on the wire by corrugation of the legs, yoke, and wire, transversely of the length of the wire.

4. The combination as defined in claim 1, characterized in that the clip includes an integrally formed wing.

5. The combination as defined in claim 3, characterized in that the clip includes an integrally formed wing.

References Cited in the file of this patent

UNITED STATES PATENTS

769,941	Crane	Sept. 13, 1904
943,469	Schade	Dec. 14, 1909
1,429,686	O'Brien	Sept. 19, 1922
2,319,105	Billner	May 11, 1943
2,449,276	Chalos	Sept. 14, 1948
2,618,147	Freyssinet	Nov. 18, 1952
2,683,915	Tournon	July 20, 1954

FOREIGN PATENTS

68,007	Norway	June 26, 1944