(12) INTERNATIONAL APPLICATION PUBLISHED UNDER THE PATENT COOPERATION TREATY (PCT)

(19) World Intellectual Property Organization
International Bureau

(43) International Publication Date
2 May 2002 (02.05.2002)

PCT

(10) International Publication Number
WO 02/35903 A2

(51) International Patent Classification[7]: H05K 13/00

(21) International Application Number: PCT/JP01/09265

(22) International Filing Date: 23 October 2001 (23.10.2001)

(25) Filing Language: English

(26) Publication Language: English

(30) Priority Data:
2000-326891 26 October 2000 (26.10.2000) JP

(71) Applicant *(for all designated States except US)*: **MATSUSHITA ELECTRIC INDUSTRIAL CO., LTD.** [JP/JP]; 1006, Oaza Kadoma, Kadoma-shi, Osaka 571-8501 (JP).

(72) Inventors; and

(75) Inventors/Applicants *(for US only)*: **NISHINO, Kenichi** [JP/JP]; 6-24, Yokozutsumi 3-chome, Tsurumi-ku, Osaka-shi, Osaka 538-0052 (JP). **KANAYAMA, Shinji** [JP/JP]; 11-1-102, Shirakashicho 3-chome, Kashihara-shi, Nara 634-0051 (JP). **TSUJI, Shinjiro** [JP/JP]; 705-4-405, Gakuennaka 5-chome, Nara-shi, Nara 631-0035 (JP). **IDA, Masayuki** [JP/JP]; 19-13-107, Satanakamachi 4-chome, Moriguchi-shi, Osaka 570-0002 (JP). **NISHIMOTO, Tomotaka** [JP/JP]; 25-26, Douyama 1-chome, Hirakata-shi, Osaka 573-0007 (JP).

(74) Agents: **AOYAMA, Tamotsu** et al.; AOYAMA & PARTNERS, IMP Building, 3-7, Shiromi 1-chome, Chuo-ku, Osaka-shi, Osaka 540-0001 (JP).

(81) Designated States *(national)*: CN, KR, SG, US.

(84) Designated States *(regional)*: European patent (AT, BE, CH, CY, DE, DK, ES, FI, FR, GB, GR, IE, IT, LU, MC, NL, PT, SE, TR).

Published:
— *without international search report and to be republished upon receipt of that report*

For two-letter codes and other abbreviations, refer to the "Guidance Notes on Codes and Abbreviations" appearing at the beginning of each regular issue of the PCT Gazette.

(54) Title: ELECTRONIC COMPONENT, COMPONENT MOUNTING EQUIPMENT, AND COMPONENT MOUNTING METHOD

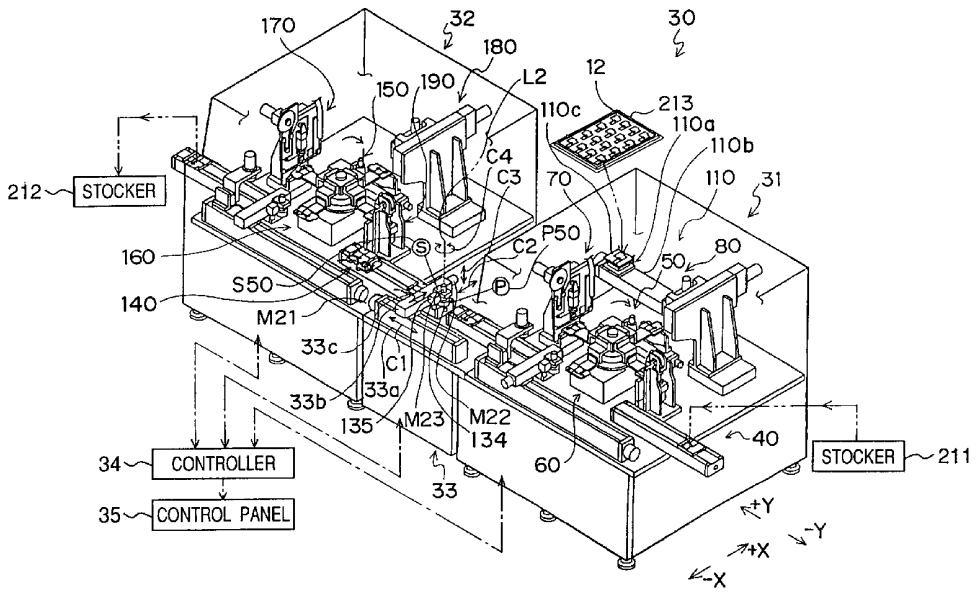

(57) Abstract: The component mounting equipment (30) mounts an FPC board (12) on an LCD board (11). The LCD board (11) has a first electrode section (11b) on one side edge and a second electrode section (11c) on another side edge. The FPC board (12) has a first section (12a) on one side edge and a second section (12b) on other side edge. A first mounting apparatus (31) mounts the first section (12a) on the first electrode section (11b). A second mounting apparatus (32) mounts the second section (12b) on the second electrode section (11c). In the second component mounting apparatus (32), the second section (12b) is separated from the second electrode section (11b) at an ACF supply section (170) and released at a pre-press bonding section (180).

WO 02/35903 A2

DESCRIPTION

ELECTRONIC COMPONENT, COMPONENT MOUNTING EQUIPMENT, AND COMPONENT MOUNTING METHOD

Technical Field

The present invention relates to an electronic component having a flexible printed-circuit board (FPC board) mounted onto a liquid crystal display board (LCD board). The invention also relates to component mounting equipment and method for mounting flexible film-like components including the FPC board on plate-like components including the LCD board.

Background Art

Figs. 30A and 30B show an example of a small LCD board 1 suitable for equipment such as mobile phones. The LCD board 1 has a liquid crystal display section 1a and an electrode section 1b having ends of driver voltage supply lines 2 disposed along one side edge of the board. On an FPC board 3 that is mounted on the LCD board 1, a driver circuit is formed by an IC 4, chip components 5 and the like. One side edge of the FPC board 3 is provided with a electrode section 3a in which ends of driver voltage supply lines 7 for the driver circuit are disposed. The electrode section 3a is fixed onto the electrode section 1b of the

LCD board 1 with anisotropic conductive film tape (ACF tape), anisotropic conductive paste (ACP) or the like, and the driver voltage supply lines 2 of the LCD board 1 are electrically connected to the corresponding driver voltage supply lines 7 of the FPC board 3.

In recent years, the function of displaying color image has been required for this type of LCD board 1 and, accordingly, a conspicuous increase in the number of the driver voltage supply lines 2, 7 has been demanded. A decrease in the pitch of the driver voltage supply lines 2, 7 would allow the number of the driver voltage supply lines 2, 7 to be increased without causing increases in the sizes of the LCD board 1 and the FPC board 3. However, since the decrease in pitch is limited to the order of 50 μm, it is difficult to achieve the increase in the number of the driver voltage supply lines 2, 7 required for displaying color image and the like only by the decrease in the pitch.

For example, if the LCD board 1 has a quadrangular shape with the length of a side of about 30 mm, the pitch of the driver voltage supply lines 2, 7 is about 50 μm, and the number of the driver voltage supply lines 2 is about 768 at the maximum, then the length required for the achievement of the number of the driver voltage supply lines 2 is 38.4 mm (50 (μm) multiplied by 768 (lines)),

which is larger than the length of a side of the LCD board 1 and cannot be fulfilled.

Disclosure of Invention

Accordingly, a first object of the present invention is to increase the number of driver voltage supply lines in an electronic component having an FPC board mounted onto an LCD board without causing increase in the sizes of the LCD board and the FPC board. A second object of the invention is to provide component mounting equipment and method suitable for producing such an electronic component.

In order to achieve the first object, a first aspect of the invention provides an electronic component comprising a display board and a flexible printed-circuit board on which a driver circuit for the display board is formed, the display board having a display section, a first electrode section in which ends of a plurality of driver voltage supply lines are disposed on one side edge extending in a first direction, and a second electrode section in which ends of a plurality of driver voltage supply lines are disposed on another side edge extending in a second direction, the first direction and the second direction crossing each other at a predetermined angle, the flexible printed-circuit board having a first section in which ends of a plurality of driver voltage supply lines

are disposed on one side edge extending in the first direction and which is placed onto the first electrode section of the display board and a second section in which ends of a plurality of driver voltage supply lines are disposed on other side edge extending in the second direction and which is placed onto the second electrode section of the display board.

In the electronic component of the first aspect of the invention, the first and second sections of the flexible printed-circuit board (FPC board) which are provided on two side edges extending in the first and the second directions crossing each other at the predetermined angle are placed onto the first and the second electrode sections of the display board which are provided on two side edges extending similarly in the first and the second directions. In other wards, the ends of the driver voltage supply lines are arranged in the first and the second electrode sections provided on different side edges of the display board, and therefore the number of the driver voltage supply lines can be increased without causing increase in sizes of the display board and the FPC board.

It is preferable that the flexible printed-circuit board further comprises a cut-out hole at a connection between the first section and the second section.

The provision of the cut-out hole allows the flexible

printed-circuit board to be bent so that the first and the second sections move relatively with respect to each other. In the mounting of the FPC board on the display board, therefore, the first and the second sections of the flexible board can be easily and reliably placed onto the first and the second electrode sections of the display board.

A second aspect of the invention provides a flexible printed-circuit board on which a driver circuit for a display board is formed, comprising: a first section in which ends of a plurality of driver voltage supply lines are disposed on one side edge extending in a first direction; and a second section in which ends of a plurality of driver voltage supply lines are disposed on other side edge extending in a second direction, the first direction and the second direction crossing each other at a predetermined angle.

In order to achieve the second object, a third aspect of the invention provides a component mounting equipment for mounting a film-like component onto a plate-like component, the plate-like component having a first placement section which is provided on one side edge and a second placement section which is provided on other side edge, and the film-like component having a first section to be placed which is provided on one side edge and a second

section to be placed which is provided on another side edge, comprising: a first mounting apparatus for placing the first section of the film-like component onto the first placement section of the plate-like component; and a second mounting apparatus for placing the second section of the film-like component onto the second placement section of the plate-like component.

To be more specific, the first mounting apparatus comprises: an adhesive supply section for supplying adhesive to the first placement section of the plate-like component; a pre-press bonding section for aligning the first section of the film-like component with the first placement section of the plate-like component, and pressing the fist section onto the first placement section with a first pressing force; a final press bonding section for pressing the first section of the film-like component onto the first placement section of the plate-like component with a second pressing force, thereby fixing the first section of the film-like component onto the first placement section of the plate-like component; a transfer section for holding the plate-like component, and transferring the plate-like component sequentially to the adhesive supply section, the pre-press bonding section, and the final press bonding section; and a film-like component supply section for supplying the film-like component to the pre-press

bonding section.

It is preferable that the transfer section comprises stages each provided with a recess where the plate-like component is to be loaded, wherein the pre-press bonding section comprises a pre-press bonding head that has a first portion for holding a portion of the film-like component including the first section and a second portion for holding a portion of the film-like component including the second section, and that presses the first section of the film-like component onto the first placement section of the plate-like component loaded on the index stage, and wherein a depth of the recess of the stage is set so that a clearance larger than a thickness of the film-like component is made between the stage and the second portion of the pre-press bonding head when the first portion of the pre-press bonding head is pressing the first section of the film-like component onto the first placement section of the plate-like component.

With such a setting of the depth of the recess of the stage, interference between the pre-press bonding head and the stage is prevented when the first section of the film-like component is pre-press bonded onto the first placement section of the plate-like component in the pre-press bonding section, resulting in that a reliable pre-press bonding process can be performed.

The second mounting apparatus comprises: an adhesive supply section for supplying adhesive onto the second placement section of the plate-like component; a pre-press bonding section for aligning the second section of the film-like component with the second placement section of the plate-like component, and pressing the second section onto the second placement section; a final press bonding section for pressing the second section of the film-like component onto the second placement section of the plate-like component with a second pressing force, thereby fixing the second section of the film-like component onto the second placement section of the plate-like component; and a transfer section for transferring the plate-like component and the film-like component of which the first section has been fixed onto the first placement section of the plate-like component sequentially to the adhesive supply section, the pre-press bonding section, and the final press bonding section, wherein the transfer section comprises a first holding mechanism for holding the plate-like component, a second holding mechanism for holding the portion of the film-like component including the first section, and a third holding mechanism for holding the portion of the film-like component including the second section, and wherein the third holding mechanism holds the film-like component with the second section separated from the second

placement section of the plate-like component in the adhesive supply section, and releases the second section of the film-like component in the pre-press bonding section.

The second mounting machine is capable of performing reliably and smoothly the application of adhesive and the pre-press bonding operation, because the film-like component is held with the second section separated from the second placement section of the plate-like component in the adhesive supply section and the second section of the film-like component is released in the pre-press bonding section, as described above.

To be more specific, the pre-press bonding section of the second mounting apparatus comprises: a recognition section for recognizing the plate-like component and the film-like component; and an alignment head for holding the second section of the film-like component, moving the second section of the film-like component on a basis of recognition by the recognition section, thereby aligning the second section with the second placement section of the plate-like component.

Furthermore specifically, the second mounting apparatus further comprises a carry-in section for supplying to the transfer section the plate-like component and the film-like component of which the first section has been fixed onto the first placement section of the plate-

like component. The carry-in section deforms the film-like component so that the second section is separated from the second placement section of the plate-like component, and supplies the plate-like component and the film-like component to the transfer section while retaining deformation of the film-like component.

The component mounting equipment preferably comprise a transporting apparatus that connects the first mounting apparatus and the second mounting apparatus, and that transports from the first mounting apparatus to the second mounting apparatus the plate-like component and the film-like component of which the first section has been fixed onto the first placement section of the plate-like component by the first mounting apparatus. The plate-like component and the film-like component may be transported from the first mounting apparatus to the second mounting apparatus by manual operation or other transfer apparatus without provision of the transporting apparatus.

For example, the plate-like component is a liquid crystal display board, and the film-like component is a flexible printed-circuit board on which a driver circuit for the liquid crystal display board is formed. However, the plate-like component is not limited to the liquid crystal display board but may be, for example, an electroluminescence device (EL device), a plasma display

panel (PDP), a conventional printed board or the like. The film-like component is not limited to the flexible printed-circuit board but may be, for example, a tape carrier package (TCP) or the like.

A fourth aspect of the invention provides a mounting apparatus for mounting a film-like component onto a plate-like component, the plate-like component having a first placement section provided on one side edge and a second placement section provided on other side edge, and the film-like component having a first section to be fixed provided on one side edge and a second section to be fixed provided on other side edge, comprising: an adhesive supply section for supplying adhesive to the first placement section of the plate-like component; a pre-press bonding section for aligning the first section of the film-like component with the first placement section of the plate-like component, and pressing the first section onto the first placement section with a first pressing force; a final press bonding section for pressing the first section of the film-like component onto the first placement section of the plate-like component with a second pressing force, thereby fixing the first section of the film-like component to the first placement section of the plate-like component; a transfer section for holding the plate-like component, and transferring the plate-like component sequentially to

the adhesive supply section, the pre-press bonding section, and the final press bonding section; and a film-like component supply section for supplying the film-like component to the pre-press bonding section.

A fifth aspect of the invention provides a mounting apparatus for mounting a film-like component onto a plate-like component, the plate-like component having a first placement section provided on one side edge and a second placement section provided on other side edge, and the film-like component having a first section to be fixed provided on one side edge and a second section to be fixed provided on other side edge, comprising: an adhesive supply section for supplying adhesive onto the second placement section of the plate-like component; a pre-press bonding section for aligning the second section of the film-like component with the second placement section of the plate-like component, and pressing the second section onto the second placement section with a first pressing force; a final press bonding section for pressing the second section of the film-like component onto the second placement section of the plate-like component with a second pressing force, thereby fixing the second section of the film-like component onto the second placement section of the plate-like component; and a transfer section for transferring the plate-like component and the film-like component of which

the first section has been fixed to the first placement section of the plate-like component sequentially to the adhesive supply section, the pre-press bonding section, and the final press bonding section, wherein the transfer section having a first holding mechanism for holding the plate-like component, a second holding mechanism for holding a portion of the film-like component including the first section, and a third holding mechanism for holding a portion of the film-like component including the second section, and wherein the third holding mechanism holds the film-like component with the second section separated from the second placement section of the plate-like component in the adhesive supply section, and releases the second section of the film-like component in the pre-press bonding section.

A sixth aspect of the invention provides a component mounting method for mounting a film-like component onto a plate-like component, the plate-like component having a first placement section provided on one side edge and a second placement section provided on other side edge, and the film-like component having a first section to be fixed provided on one side edge and a second section to be fixed provided on other side edge comprising: placing the first section of the film-like component to the first placement section of the plate-like component; and placing the second

section of the film-like component onto the second placement section of the plate-like component.

Brief Description of the Drawings

Further objects and advantages of the present invention will become clear from the following description taking in conjunction with the preferred embodiments thereof with reference to the accompanying drawings, in which:

Fig. 1A is a perspective view illustrating an electronic component composed of an LCD board and an FPC board according to an embodiment of the invention;

Fig. 1B is an exploded perspective view illustrating the electronic component;

Fig. 2 is a perspective view illustrating a component mounting equipment according to the embodiment of the invention;

Fig. 3 is a perspective view illustrating a first mounting apparatus;

Fig. 4 is a perspective view illustrating a second mounting apparatus;

Fig. 5 is a partial perspective view illustrating a carry-in slider of the first mounting apparatus;

Fig. 6 is a partial perspective view illustrating a carry-in head of the first mounting apparatus;

Fig. 7 is a partial perspective view illustrating an index stage of the first mounting apparatus;

Fig. 8 is a schematic partial sectional view taken along the line VIII-VIII in Fig. 7;

Fig. 9 is a partial perspective view illustrating a suction head of the first mounting apparatus;

Fig. 10 is a perspective view illustrating a pre-press bonding section of the first mounting apparatus;

Fig. 11 is a partial perspective view illustrating a carry-out head of the first mounting apparatus;

Fig. 12 is a partial perspective view illustrating a carry-out slider of the first mounting apparatus;

Fig. 13 is a partial perspective view illustrating a carry-in slider of the second mounting apparatus;

Fig. 14 is a partial perspective view illustrating a carry-in head of the second mounting apparatus;

Fig. 15 is a partial perspective view illustrating an index stage of the second mounting apparatus;

Fig. 16 is a perspective view illustrating a pre-press bonding section of the second mounting apparatus;

Fig. 17 is a partial perspective view illustrating a suction head of the second mounting apparatus;

Fig. 18 is a partial perspective view illustrating a carry-out head of the second mounting apparatus;

Fig. 19 is a partial perspective view illustrating a

carry-out slider of the second mounting apparatus;

Fig. 20 is a schematic plan view illustrating overall processes of a component mounting method according to the embodiment of the invention;

Figs. 21A to 21D are perspective views for illustrating mounting processes in the first mounting apparatus;

Figs. 22A to 22D are perspective views for illustrating mounting processes in the second mounting apparatus;

Figs. 23A and 23B are perspective views for illustrating an operation of the carry-in slider of the second mounting apparatus;

Figs. 24A to 24E are perspective views for illustrating an alignment of an FPC board with an LCD board by a pre-press bonding head of the second mounting apparatus;

Fig. 25 is a perspective view illustrating another example of a carry-in slider provided in the second mounting apparatus;

Fig. 26 is a schematic partial sectional view taken along the line XXVI-XXVI in Fig. 25;

Fig. 27 is a perspective view illustrating another example of a carry-in slider provided in the second mounting apparatus;

Fig. 28 is a partial sectional view taken along the line XXVIII-XXVIII in Fig. 27;

Fig. 29 is a perspective view illustrating another example of a carry-in slider provided in the second mounting apparatus;

Fig. 30A is a perspective view illustrating a conventional electronic component composed of a LCD board and a conventional FPC board; and

Fig. 30B is an exploded perspective view illustrating the conventional electronic component.

Best Mode for Carrying Out the Invention

Preferred embodiments of the invention will be described in detail with reference to drawings.

An electronic component 10 according to the embodiment of the invention shown in Figs. 1A and 1B comprises a liquid crystal display board (LCD board) 11 and a flexible printed-circuit board (FPC board) 12 mounted onto the LCD board 11.

In the LCD board 11, liquid crystal resin is enclosed between two enclosure plates 14 and 15 made of resin. The LCD board 11 has a liquid crystal display section 11a and has first and second electrode sections 11b and 11c on a rear side of the board (a side located at the inner side of a equipment when the board is installed in the equipment).

The first electrode section 11b, where ends of a plurality of driver voltage supply lines 17a are arranged, is provided on one side edge extending in a first direction A1. On the other hand, the second electrode section 11c, where ends of a plurality of driver voltage supply lines 17b are arranged, is provided on another side edge extending in a second direction A2. In this embodiment, the first direction A1 and the second direction A2 cross each other at nearly right angles, therefor the first electrode section 11b and the second electrode section 11c form a shape like a letter L in plan view. At one end of the first electrode section 11b, one end of the second electrode section 11c, and a connection of the first electrode section 11b and the second electrode section 11c are provided marks 11d, 11e, and 11f, respectively. By these marks 11d, 11e, and 11f, a component mounting equipment 30 that will be described below recognizes a position and a posture of the LCD board 11.

The FPC board 12 is comprised of a base film 19 made of flexible film on which a conductor layer is printed. On the FPC board 12, a driver circuit is configured by an IC 4, chip components 5, and the like. On a bottom surface side of the FPC board 12 in Figs. 1A and 1B are provided a first and a second sections 12a and 12b to be fixed. The first section 12a is provided on one side edge extending in the

first direction A1, and the second section 12b is provided on other side edge extending in the second direction A2. In the first and the second sections 12a and 12b are arranged ends of a plurality of driver voltage supply lines 21a and 21b, respectively. As described above, the first direction A1 and the second direction A2 cross each other at right angles, and the first section 12a and the second section 12b form a shape like a letter L in plan view.

At both ends of the first section 12a are provided marks 12c and 12d by which the component mounting equipment 30 that will be described below recognizes a position and a posture of the FPC board 12. At both ends of the second section 12b are similarly provided marks 12e and 12f by which the component mounting equipment 30 recognizes the position and the posture.

At a connection between the first section 12a and the second section 12b is provided a cut-out hole 22 where a rectangular portion of the base film 19 has been cut out. By the provision of the cut-out hole 22, the FPC board 12 is divided into a first portion 12g, a second portion 12h, and a link portion 12i that links the portions 12g and 12h. The first portion 12g includes the first section 12a and an area (a component area 12j) where the IC 4, the chip components 5 and the like are mounted. On the other hand, the second portion 12h includes the second section 12b. A

width D1 of the link portion 12i is smaller than widths of the first portion 12g and the second portion 12h, so that the base film 19 in the link portion 12i bends easily.

The first and the second sections 12a and 12b of the FPC board 12 are respectively placed onto the first and the second electrode sections 11b and 11c of the LCD board 11 with anisotropic conductive film tape (ACF tape), and the driver voltage supply lines 17a and 17b of the LCD board 11 are electrically connected to the corresponding driver voltage supply lines 21a and 21b of the FPC board 12. Instead of ACF tape, anisotropic conductive paste (ACP) or the like may be used to place the first and the second sections 12a and 12b of the FPC board 12 onto the first and the second electrode sections 11b and 11c of the LCD board 11.

In the electronic component 10 of the embodiment, as described above, the first and the second sections 12a and 12b of the FPC board 12 which are provided on the two side edges extending in the first and the second directions A1 and A2 crossing each other at right angle are placed onto the first and the second electrode sections 11b and 11c of the LCD board 11 which are provided on the two side edges extending similarly in the first and the second directions A1 and A2. In other wards, the ends of the plurality of driver voltage supply lines 17a and 17b are respectively

arranged in the first and the second electrode sections 11b and 11c provided on different side edges of the LCD board 11. As a result, the number of the driver voltage supply lines 17a and 17b in the LCD board 11 can be increased without causing increase of sizes of the LCD board 11 and the FPC board 12.

For example, if the LCD board 11 has an outside dimension of about 30 mm in length of one side and the pitch of the driver voltage supply lines 17a and 17b is about 50 μm, the number of the driver voltage supply lines 17a and 17b in the first and second electrode sections 11b and 11c is approximately 384 in each section at the maximum (approximately 768 in total in the first and second electrode sections 11b and 11c). This degree of the number of the driver voltage supply lines 17a and 17b permits a sufficient color display function to be performed.

Hereinbelow, component mounting equipment and method of the invention suitable for the production of the electronic component 10 will be described.

As shown in Fig. 2, the component mounting equipment 30 comprises a first mounting machine 31 for placing the first section 12a of the FPC board 12 onto the first electrode section 11b of the LCD board 11 and a second mounting apparatus 32 for placing the second section 12b of the FPC board 12 onto the second electrode section 11c of

the LCD board 11. The component mounting equipment 30 also comprises a transporting apparatus 33 that connects the first mounting apparatus 31 and the second mounting apparatus 32. Moreover, the component mounting equipment 30 has a controller 34 connected to driving elements such as servo motors and air cylinders included in the first mounting apparatus 31, the second mounting apparatus 32, and the transporting apparatus 33. The controller 34 controls the driving elements included in the first mounting apparatus 31, the second mounting apparatus 32, and the transporting apparatus 33 on the basis of instructions inputted from recognition cameras and various sensors included in the first mounting apparatus 31, the second mounting apparatus 32, and the transporting apparatus 33 and instructions inputted from a control panel 35. The first mounting apparatus 31, the second mounting apparatus 32, and the transporting apparatus 33 may have their respective controllers and their respective control panels.

The first mounting apparatus 31 will be described initially. In the accompanying drawings, Fig. 3 shows the overall structure of the first mounting apparatus 31 and Figs. 5 to 12 show structures of various parts of the first mounting apparatus 31.

As shown in Fig. 3, the first mounting apparatus 31

has a carry-in section 40 for carrying an LCD board 11 into the apparatus and a rotating transfer section 50 for transferring boards 11 fed from the carry-in section 40 in the apparatus LCD. Around the rotating transfer section 50 are provided a hand over section 60, an ACF supply section 70, a pre-press bonding section 80, and a final press bonding section 90. In addition, the first mounting apparatus 31 has a carry-out section 100 for carrying an LCD board 11 and an FPC board 12 from the rotating transfer section 50 to the outside of the apparatus.

The carry-in section 40 has a carry-in slider 41 and a carry-in arm 42.

The carry-in slider 41 has a guide rail 41a and a slide plate 41b that is driven by an air cylinder S1 to reciprocate linearly in a direction of an arrow B1 on the guide rail 41a. As shown in Fig. 5, a loading plate 41c on which an LCD board 11 is to be loaded is fixed to the slide plate 41b. In the loading plate 41c are provided a plurality of suction holes 41d. These suction holes 41d are connected to a vacuum pump P1 so that an LCD board 11 can be sucked and held on the loading plate 41c. On the loading plate 41c are provided pins 41e for the alignment of the LCD board 11. The loading plate 41c is fixed to the slide plate 41b with three bolts 41f. Holes 41g in which these bolts 41f are inserted have a shape that is not a

perfect circle but a distorted ellipse so that a posture of the loading plate 41c can be adjusted with respect to the slide plate 41b.

The carry-in arm 42 has a guide rail 42a and a slide plate 42b driven by a servo motor M1 to reciprocate linearly in a direction of an arrow B4 on the guide rail 42a. To the slide plate 42b is fixed a guide rail 42c extending in a direction orthogonal to the guide rail 42a. On the guide rail 42c is provided a carry-in head 43 driven by a servo motor M2 to move linearly in a direction indicated by an arrow B3. The carry-in head 43 extends downward and, as shown in Fig. 6, a lower end thereof is provided with suction holes 43b on which suction pads 43a are installed. The suction holes 43b are pneumatically connected to a vacuum pump P2 so that an LCD board 11 can be sucked and held on the lower end of the carry-in head 43. The carry-in head 43 is driven by an air cylinder S9 (see Fig. 3) so as to move vertically as shown by an arrow B2. Moreover, the carry-in head 43 is capable of turning about its axis by the drive of a motor M3. In addition, there is provided a recognition camera 42d that moves integrally with the carry-in head 43.

The rotating transfer section 50 comprises a rotating shaft 51 extending vertically and intermittently rotated by a motor M4 in a direction shown by an arrow B6 in steps of

90 degrees and has four arms 52 proximal ends thereof being fixed to the rotating shaft 51 so that the arms 52 form angles of 90 degrees with each other about the rotating shaft 51 in plan view. At a distal end of each arm 52 is installed an index stage 53 for holding an LCD board 11. At positions corresponding to the distal ends of the arms 52 are provided the hand over section 60 for handling over an LCD board 11 from the carry-in section 40 to the rotating transfer section 50 and from the rotating transfer section 50 to a carry-out section 100, the ACF supply section 70, the pre-press bonding section 80, and the final press bonding section 90 in order of mention along the direction of the rotation of the index stages 53 shown by the arrow B6.

As shown in Figs. 7 and 8, a recess 53a where an LCD board 11 is to be loaded is provided in each index stage 53 and a plurality of suction holes 53b are provided at the bottom of the recess 53a. The suction holes 53b are pneumatically connected to a vacuum pump P3 so that an LCD board 11 can be sucked and held on the index stage 53. On a distal side of each index stage 53, an insertion hole 53c into which later mentioned heating-pressurizing tools of the pre-press bonding section 80 and the final press bonding section 90 are to be inserted is provided so as to penetrate through the index stage in a direction of

thickness thereof. Besides, each index stage 53 has a heater as an auxiliary heating unit for heating an LCD board 11 in later mentioned processes of ACF supplying, pre-press bonding, and final press bonding.

The ACF supply section 70 applies anisotropic conductive film tape (ACF tape) 71 on the first electrode section 11b of an LCD board 11 held on the index stage 53. The ACF supply section 70 has a supply source 70a of ACF tape 71, a heating-pressurizing tool 70b for pressing ACF tape 71 onto the first electrode section 11b of the LCD board 11 and heating the tape (for example, up to 80°C), and a cutter for cutting the ACF tape 71 to a length corresponding to the first electrode section 11b after the pressurization by the heating-pressurizing tool 70b (not shown).

The pre-press bonding section 80 comprises an FPC alignment section 82 provided with an FPC pre-press bonding head 81 shown in Fig. 9 and a press bonding section 83 shown in Fig. 10.

The FPC alignment section 82 has a base 82a driven by a servo motor M5 to move linearly in a direction shown by an arrow B8, and a slide section 82b slidably installed on the base 82a and driven by a motor M6 to move linearly in a direction shown by an arrow B9. On the slide section 82b is installed an arm 82c extending vertically (see Fig. 9).

The arm 82c is driven by a servo motor M7 so as to be capable of moving up and down as shown by an arrow B10. The arm 82c is also driven by a motor M13 so as to be capable of turning about an axis L1 thereof (see Fig. 9). As shown in Fig. 9, the FPC pre-press bonding head 81 is fixed to a lower end of the arm 82c. Thus, the FPC pre-press bonding head 81 is capable of moving in the horizontal directions orthogonal to each other as shown by the arrows B8 and B9, moving vertically as shown by the arrow B10, and rotating about the axis L1 as shown by an arrow B16. The FPC pre-press bonding head 81 has a first portion 81a for sucking the first section 12a of the FPC board 12 and a second portion 81b for sucking the second section 12b of the FPC board 12. The first and the second portions 81a and 81b are respectively provided with a plurality of suction holes 81c and 81d pneumatically connected to a vacuum pump P5.

As shown in Fig. 10, the press bonding section 83 has a table 83c driven by servo motors M10 and M11 to move linearly on guide rails 83a and 83b as shown by arrows B11 and B12. On the table 83c are installed a heating-pressurizing tool 83d for pressing the first section 12a of an FPC board 12 onto the first electrode section 11b of an LCD board 11 and heating the sections (for example, up to 80°C), and a recognition camera 83e for the FPC board 12.

On the table 83c is also provided a cam 83f moved linearly by an air cylinder S5. The heating-pressurizing tool 83g driven by the cam 83f moves up and down as shown by an arrow B14. Besides, the press bonding section 83 has a recognition camera 83h for the LCD board 11.

Adjacent to the pre-press bonding section 80, an FPC supply section 110 is provided. The FPC supply section 110 has an FPC supply slider 110a. On a guide rail 110b of the FPC supply slider 110a, a slide plate 110c driven by a servo motor M8 reciprocates linearly as shown by an arrow B7. The slide plate 110c is capable of sucking and holding an FPC board 12 by means of a vacuum pump P4.

The final press bonding section 90 has an air cylinder S40 provided so as to extend vertically and a heating-pressurizing tool installed on a distal end of the air cylinder S40 (not shown). This heating-pressurizing tool presses the first section 12a of an FPC board 12 onto the first electrode section 11b of an LCD board 11 and heats the sections (for example, up to 200°C).

The carry-out section 100 has a carry-out slider 101 and a carry-out arm 102.

The carry-out slider 101 has a guide rail 101a and a slide plate 101b driven by an air cylinder S3 to reciprocate linearly on the guide rail 101a in a direction of an arrow B5. As shown in Fig. 12, a loading plate 101c

on which an LCD board 11 and an FPC board 12 are to be loaded is fixed to the slide plate 101b. On the loading plate 101c is provided a recess 101d where the LCD board 11 is to be loaded. At the bottom of the recess 101d are provided a plurality of suction holes 101e for sucking the LCD board 11. The suction holes 101e are pneumatically connected to a vacuum pump P7. Around the recess 101d of the loading plate 101c are provided a plurality of suction holes 101f for sucking the FPC board 12, and the suction holes 101f also are pneumatically connected to the vacuum pump P7. In an area of the loading plate 101c corresponding to the component area 12j of the FPC board 12 is provided a recess 101g for preventing interference with the IC 4 and the chip components 5. The loading plate 101c is fixed to the slide plate 101b with three bolts 101h. Holes 101i in which the bolts 101h are inserted have a shape that is not a perfect circle but a distorted ellipse so that a posture of the loading plate 101c can be adjusted with respect to the slide plate 101b.

The carry-out arm 102 is fixed to the slide plate 42b to which the carry-in arm 42 is fixed in common. On a distal end of the carry-out arm 102 is provided a carry-out head 103 extending downward. As shown in Fig. 11, a recess 103a in which an LCD board 11 is to be placed is provided on a lower end of the carry-out head 103, and suction holes

103c for sucking the LCD board 11 are provided on the bottom of the recess 103a, the suction holes 103a respectively being provided with suction pads 103b. The suction holes 103a are pneumatically connected to a vacuum pump P6. Around the recess 103a of the carry-out head 103 are provided a plurality of suction holes 103d for sucking an FPC board 12. The suction holes 103d also are connected to the vacuum pump P6. The carry-out head 103 is driven by an air cylinder S2 (see Fig. 3) to move up and down as shown by an arrow B15.

Hereinbelow, the transporting apparatus 33 will be described with reference to Fig. 2.

The transporting apparatus 33 has a guide rail 33a and a slide plate 33b driven by a servo motor M21 to reciprocate linearly in a direction of an arrow C1 on the guide rail 33a. To the slide plate 33b is fixed a guide rail 33c extending in a direction that intersects the guide rail 33a at right angles. On the guide rail 33c is provided a transporting head 134 driven by a servo motor M22 to reciprocate linearly in a direction of an arrow C2. To the transporting head 134 is pneumatically connected a vacuum pump P50 for sucking and holding an LCD board 11 and an FPC board 12 on a bottom surface of the head. The transporting head 134 is driven by an air cylinder S50 so as to be capable of moving vertically as shown by an arrow

C3 and is driven by a motor M23 so as to be capable of rotating about a vertical axis L2 as shown by an arrow C4. The transporting apparatus 33 is also provided with a recognition camera 135 that moves integrally with the transporting head 134.

Hereinbelow, the second mounting apparatus 32 will be described. In the accompanying drawings, Fig. 4 shows an overall structure of the second mounting apparatus 32 and Figs. 13 to 19 show structures of various sections of the second mounting apparatus 32.

As shown in Fig. 4, the second mounting apparatus 32 comprises a carry-in section 140 for carrying an LCD board 11 and an FPC board 12 from the transporting apparatus 33 into the machine 32, and a rotating transfer section 150 for transferring LCD boards 11 and FPC boards 12 fed from the carry-in section 140 in the apparatus. Around the rotating transfer section 150 are provided a hand over section 160, an ACF supply section 170, a pre-press bonding section 180, and a final press bonding section 190. In addition, the second mounting apparatus 32 comprises a carry-out section 200 for carrying out the LCD board 11 and the FPC board 12 from the rotating transfer section 150 to the outside of the apparatus.

The carry-in section 140 comprises a carry-in slider 141 and a carry-in arm 142.

The carry-in slider 141 has a guide rail 141a and a slide plate 141b driven by an air cylinder S11 to reciprocate linearly in a direction of an arrow E1 on the guide rail 141a.

As shown in Fig. 13, an LCD loading plate 141c (a first holding mechanism) on which an LCD board 11 is to be loaded is fixed to the slide plate 141b. The LCD loading plate 141c is provided with a plurality of suction holes 141d. The suction holes 141d are pneumatically connected to a vacuum pump P10 so that the LCD board 11 can be sucked and held on the LCD loading plate 141c. The LCD loading plate 141c is fixed to the slide plate 141b with three bolts 141e. Holes 141f in which the bolts 141e are inserted have a shape that is not a perfect circle but a distorted ellipse so that a posture of the LCD loading plate 141c can be adjusted with respect to the slide plate 141b.

To the slide plate 141b is fixed a fixed FPC loading plate 141g (a second holding mechanism) adjacent to the LCD loading plate 141c. The Fixed FPC loading plate 141g is provided with a plurality of suction holes 141h for sucking the first portion 12g of an FPC board 12. The suction holes 141h are pneumatically connected to a vacuum pump P11.

On the slide plate 141b are installed a movable FPC loading plate 141j (a third holding mechanism) of which a

proximal end side is capable of pivoting about a shaft 141i in a horizontal plane, and a lever 141m which is capable of pivoting about a shaft 141k in a horizontal plane.

The movable FPC loading plate 141j is provided with suction holes 141n for sucking the second portion 12h and the link portion 12i of an FPC board 12. The suction holes 141n are pneumatically connected to a vacuum pump P12 other than the vacuum pumps P10 and P11. The lever 141m has a distal end engaged with the movable FPC loading plate 141j and a proximal end connected to a spring 141p. The spring 141p elastically biases the lever 141m in a counterclockwise direction in plan view. One end of an air cylinder S55 that is driven by a pump P53 is in contact with a portion of the lever 141m nearer to the proximal end of the lever 141m than the shaft 141k. When the air cylinder S55 is in its projecting position as shown by a solid line in Fig. 13, the lever 141m pivots in a clockwise direction in plan view against the biasing force caused by the spring 141p. As a result, a distal end of the movable FPC loading plate 141j moves away from the LCD loading plate 141c as shown by an arrow E30, and the movable FPC loading plate 141j and the LCD loading plate 141c form a shape like a letter V in plan view. On the other hand, when the air cylinder S55 is in its retracted position as shown by a dotted line in Fig. 13, the lever 141m pivots

counterclockwise in plan view by the biasing force the spring 141p exerts. As a result, the extremity of the movable FPC loading plate 141j is brought into intimate contact with the LCD loading plate 141c.

The carry-in arm 142 has a guide rail 142a and a slide plate 142b driven by a servo motor M31 to reciprocate linearly in a direction of an arrow E2 on the guide rail 142a. To the slide plate 142b is fixed a guide rail 142c extending in a direction orthogonal to the guide rail 142a. On the guide rail 142c is provided a carry-in head 143 driven by a servo motor M32 to move linearly in a direction of an arrow E3. Besides, the carry-in head 143 is driven by an air cylinder S12 so as to move up and down as shown by an arrow E4. Moreover, the carry-in head 143 is capable of rotating about its axis by the drive of a motor M33. In addition, there is provided a recognition camera 142d that moves integrally with the carry-in head 143.

As shown in Fig. 14, a recess 143a in which an LCD board 11 is to be placed is provided on a lower end of the carry-in head 143. A plurality of suction holes 143b provided in the recess 143a are pneumatically connected to a vacuum pump P13 so that the LCD board 11 can be sucked and held to the lower end of the carry-in head 143. Around the recess 143a are provided a plurality of suction holes 143c for sucking the first portion 12g of an FPC board 12

and a plurality of suction holes 143d for sucking the second portion 12h and the link portion 12i of the FPC board 12. The suction holes 143c and 143d are pneumatically connected to a vacuum pump P14 other than the vacuum pump P13 for sucking an LCD board 11.

The rotating transfer section 150 has a rotating shaft 151 extending vertically and intermittently rotated by a motor M34 in a direction shown by an arrow E5 in steps of 90 degrees and has four arms 152 proximal ends thereof being fixed to the rotating shaft 151 so that the arms 152 form angles of 90 degrees with each other about the rotating shaft 151 in plan view. At a distal end of each arm 152 is installed an index stage 153 for holding an LCD board 11 and a FPC board 12. At positions corresponding to the distal ends of the arms 152 are provided the hand over section 160 for handling over an LCD board 11 and a FPC board from the carry-in section 140 to the rotating transfer section 150 and from the rotating transfer section 150 to the carry-out section 200, the ACF supply section 170, the pre-press bonding section 180, and the final press bonding section 190 in order of mention along the direction of rotation shown by the arrow E5.

As shown in Fig. 15, a recess 153a where an LCD board 11 is to be loaded is provided in each index stage 153, and a plurality of suction holes 153b are provided at the

bottom of the recess 153a. The suction holes 153b are pneumatically connected to a vacuum pump P15 so that an LCD board 11 can be sucked and held on the index stage 153. Around the recess 153a are provided a plurality of suction holes 153c for sucking the first portion 12g of an FPC board 12 and a plurality of suction holes 153d for sucking the second portion 12h and the link portion 12i of the FPC board 12. The suction holes 153c and 153d are pneumatically connected to a vacuum pump P16 other than the vacuum pump P15. On a distal side of each index stage 153, an insertion hole 153e into which later mentioned heating-pressurizing tools of the pre-press bonding section 180 and the final press bonding section 190 are to be inserted is provided so as to penetrate through the index stage 153 in a direction of thickness thereof. Besides, each index stage 153 has a heater as an auxiliary heating unit for heating an LCD board 11 and an FPC board 12 in later mentioned processes of ACF supplying, pre-press bonding, and final press bonding.

The ACF supply section 170 applies ACF tape 171 on the second electrode section 11c of an LCD board 11 held on the index stage 153. The ACF supply section 170 has a supply source 170a of ACF tape 171, a heating-pressurizing tool 170b for pressing the ACF tape 171 onto the second electrode section 11c of the LCD board 11 and heating the

tape (for example, up to 80°C), and a cutter for cutting the ACF tape 171 to a length corresponding to the second electrode section 11c after the pressurization by the heating-pressurizing tool 170b (not shown).

The pre-press bonding section 180 comprises an FPC alignment section 182 provided with an FPC pre-press bonding head (an aligning head) 181 shown in Fig. 17, and a press bonding section 183 shown in Fig. 16.

The FPC alignment section 182 has a base 182a driven by a servo motor M35 to move linearly in a direction shown by an arrow E9, and a slide section 182b slidably installed on the base 182a and driven by a motor M36 to move linearly in a direction shown by an arrow E10. On the slide section 182b is installed an arm 182c extending vertically (see Fig. 17). The arm 182c is driven by a servo motor M37 so as to be capable of moving up and down as shown by an arrow E11. The arm 182c is also driven by a motor M38 so as to be capable of turning about an axis L5 (see Fig. 17) of the arm itself. As shown in Fig. 17, the FPC pre-press bonding head 181 is fixed to a lower end of the arm 182c. Thus the FPC pre-press bonding head 181 is capable of moving in the horizontal directions orthogonal to each other as shown by the arrows E9 and E10, moving vertically as shown by the arrow E11, and rotating about the axis L5 as shown by an arrow E20. The FPC pre-press bonding head 181 has a

plurality of suction holes 181a for sucking the second section 12b of an FPC board 12. To the suction holes 181a is pneumatically connected a vacuum pump P17.

As shown in Fig. 16, the press bonding section 183 has a table 183c driven by servo motors M38 and M39 to move linearly on guide rails 183a and 183b as shown by arrows E6 and E7. On the table 183c are installed a heating-pressurizing tool 183d for pressing the second section 12b of an FPC board 12 on the second electrode section 11c of an LCD board 11 and heating the sections (for example, up to 80°C), and a recognition camera 183e for an FPC board 12. On the table 183c is also provided a cam 183f moved linearly in a direction of an arrow E8 by an air cylinder S13. The heating-pressurizing tool 183d driven by the cam 183f moves up and down as shown by an arrow E21. Besides, the press bonding section 183 has a recognition camera 183g for an LCD board 11.

The final press bonding section 190 has an air cylinder S41 provided so as to extend vertically and a heating-pressurizing tool (not shown) installed on a distal end of the air cylinder S41. This heating-pressurizing tool presses the second section 12b of an FPC board 12 onto the second electrode section 11c of an LCD board 11 and heats the sections (for example, up to 200°C).

The carry-out section 200 has a carry-out slider 201

and a carry-out arm 202.

As shown in Fig. 19, the carry-out slider 201 has a guide rail 201a and a slide plate 201b driven by an air cylinder S16 to reciprocate linearly on the guide rail 201a in a direction of an arrow E25. To the slide plate 201b is fixed a loading plate 201c on which an LCD board 11 and an FPC board 12 are to be loaded. On the loading plate 201c is provided a recess 201d where the LCD board 11 is to be placed. At the bottom of the recess 201d are provided a plurality of suction holes 201e for sucking the LCD board 11. The suction holes 201e are pneumatically connected to a vacuum pump P20. Around the recess 201d of the loading plate 201c are provided a plurality of suction holes 201f for sucking the FPC board 12, and the suction holes 201f also are connected to the vacuum pump P20. In an area of the loading plate 201c corresponding to the component area 12j of the FPC board 12 is provided a recess 201g for preventing interference with the IC 4 and the chip components 5. The loading plate 201c is fixed to the slide plate 201b with three bolts 201h. Holes 201i in which the bolts 201h are inserted have a shape that is not a perfect circle but a distorted ellipse so that a posture of the loading plate 201c can be adjusted with respect to the slide plate 201b.

The carry-out arm 202 is fixed to the slide plate 142b

to which the carry-in arm 142 is fixed in common. On a distal end of the carry-out arm 102 is provided a carry-out head 203 extending downward. The carry-out head 203 is driven by an air cylinder S15 (see Fig. 4) to move up and down as shown by an arrow E26. As shown in Fig. 18, suction holes 203b for sucking an LCD board 11 with suction pads 203a are provided on a lower end of the carry-out head 203. The suction holes 203b are connected to a vacuum pump P18. A nozzle 203d for sucking an FPC board 12 is attached to the carry-out head 203 through a bracket 203c secured to the carry-out head 203 by screws. The nozzle 203d is pneumatically connected to a vacuum pump P19 other than the vacuum pump P18 for sucking an LCD board 11.

Hereinbelow, operations of the component mounting equipment 30 will be described.

Firstly, a process of mounting an FPC board 12 on an LCD board 11 which is performed by the component mounting equipment 30 will be described in outline with reference to Figs. 20 to 23.

At the hand over section 60 of the first mounting apparatus 31, an LCD board 11 is supplied from the carry-in slider 41 onto one index stage 53 of the rotating transfer section 50 by means of the carry-in arm 42 (see a step 1 in Fig. 20 and Fig. 21A). Then, after rotation of the index stage 53 at 90 degrees, the ACF tape 71 is applied to the

first electrode section 11b of the LCD board 11 in the ACF supply section 70 (see a step 2 in Fig. 20 and Fig. 21B). The index stage 53 is then rotated another 90 degrees, an FPC board 12 is supplied from the FPC supply section 110 to the pre-press bonding section 80, and the first section 12a of the FPC board 12 is pre-press bonded onto the first electrode section 11b of the LCD board 11 (see a step 3 in Fig. 20 and Fig. 21C). The index stage 53 is then rotated another 90 degrees and the first section 12a of the FPC board 12 is finally press bonded onto the first electrode section 11b of the LCD board 11 in the final press bonding section 90 (see a step 4 in Fig. 20 and Fig. 21D). Further rotation of the index stage 53 at 90 degrees allows the index stage 53 return to the hand over section 60, and then the LCD board 11 and the FPC board 12 are transferred onto the transporting head 134 of the transporting apparatus 33 (see a step 5 in Fig. 20).

The transporting head 134 is then rotated about the axis L2 so as to turn the LCD board 11 and the FPC board 12 90 degrees counterclockwise in plan view (see a step 6 in Fig. 20). The LCD board 11 and the FPC board 12 are then supplied from the transporting apparatus 33 to the carry-in section 140 of the second mounting apparatus 32 (see a step 7 in Fig. 20), and the distal end of the movable FPC loading plate 141j of the carry-in slider 141 moves away

from the LCD loading plate 141c so that the plates 141j and 141c form a shape like a letter V (see a step 8 in Fig. 20 and Fig. 22A). As a result, the link portion 12i of the FPC board 12 bends so that the second section 12b of the FPC board 12 is separated from the second electrode section 11c of the LCD board 11. Accordingly, the second electrode section 11c of the LCD board 11 is exposed. The LCD board 11 and the FPC board 12 are subsequently supplied from the carry-in slider 141 onto one index stage 153 of the rotating transfer section 150 by means of the carry-in arm 142 in the hand over section 160. Even though the boards are supplied to the index stage 153, the shape of the FPC board 12 is kept so that the second section 12b remains separated from the second electrode section 11c of the LCD board 11. The index stage 153 is then rotated 90 degrees, and ACF tape 171 is applied to the second electrode section 11c of the LCD board 11 in the ACF supply section 170 (see a step 10 in Fig. 20 and Fig. 22A). The index stage 153 is then turned another 90 degrees, and the second section 12b of the FPC board 12 is pre-press bonded onto the second electrode section 11c of the LCD board 11 in the pre-press bonding section 180 (see a step 11 in Fig. 20 and Fig. 22B). The index stage 153 is then turned another 90 degrees, and the second section 12b of the FPC board 12 is finally bonded onto the second electrode section 11c of the LCD

board 11 in the final press bonding section 190 (see a step 12 in Fig. 20 and Fig. 22C). Eventually, the index stage 153 is turned another 90 degrees and returns to the hand over section 160 (see Fig. 22D), and then the LCD board 11 and the FPC board 12 are transferred onto the carry-out slider 201 by means of the carry-out arm 202 (see a step 13 in Fig. 20).

In the component mounting equipment 30, as described above, the first mounting apparatus 31 places the first section 12a of an FPC board 12 to the first electrode section 11b of an LCD board 11, and then the second mounting apparatus 32 places the second section 12b of the FPC board 12 to the second electrode section 11c of the LCD board 11. In the ACF supply section 170 of the second mounting apparatus 32, the second section 12b of the FPC board 12 is held so as to be separated from the second electrode section 11c of the of the LCD board 11, Whereas ,in the pre-press bonding section 180, the second section 12b of the FPC board 12 is released and pre-press bonded onto the second electrode section 11c of the LCD board 11.

The operations of the first mounting apparatus 31, the transporting apparatus 33, and the second mounting apparatus 32 will be described in more detail.

Firstly, the operation of the first mounting apparatus

31 will be described with reference to Fig. 3 and Figs. 5 to 12.

An LCD board 11 carried out of a stocker 211 (see Fig. 2) by a conveyor mechanism not shown is loaded on the loading plate 41c of the carry-in slider 41 and sucked by the suction holes 41d. The loading plate 41c, together with the slide plate 41b, then moves into the first mounting apparatus 31 and the carry-in arm 42 moves to above the loading plate 41c. After the LCD board 11 is recognized by the recognition camera 42d and a position of the LCD board 11 is corrected, the carry-in head 43 descends onto the LCD board 11. The LCD board 11 is sucked and held on the carry-in head 43 by the suction holes 43b and the suction by the suction holes 41d of the loading plate 41c is released.

Subsequently, the carry-in arm 42 that has sucked and held the LCD board 11 moves to the hand over section 60. In the hand over section 60, the carry-in arm 42 moves along the guide rail 42c to align the LCD board 11 over an index stage 53. The carry-in head 43 then descends so as to load the LCD board 11 into the recess 53a of the index stage 53. At this time, the first electrode section 11b of the LCD board 11 is aligned with the insertion hole 53c. When the LCD board 11 is sucked by the suction holes 53b of the index stage 53, the suction by the suction holes 43b of

the carry-in head 43 is released.

The rotating shaft 51 then rotates 90 degrees in the direction of the arrow B6, thereby moving the index stage 53 to the ACF supply section 70. In the ACF supply section 70, ACF tape 71 is applied to the first electrode section 11b of the LCD board 11. After that, the rotating shaft 51 rotates another 90 degrees in the direction of the arrow B6, thereby moving the index stage 53 to the pre-press bonding section 80. In synchronization with the movement of the index stage 53 to the pre-press bonding section 80, the FPC supply slider 110a loaded with an FPC board 12 fed from a tray 213 (see Fig. 2) moves to beneath the FPC pre-press bonding head 81. The FPC pre-press bonding head 81 then descends and sucks the FPC board 12 on the FPC supply slider 110a.

The marks 11d and 11f of the LCD board 11 are then recognized by the recognition camera 83h as well as the marks 12c and 12d of the FPC board 12 are recognized by the recognition camera 83e. On the basis of the recognition result, the FPC pre-press bonding head 81 moves as shown by the arrows B8 and B9 and rotates as shown by the arrow B16 to align the first section 12a of the FPC board 12 with the first electrode section 11b of the LCD board 11. After this alignment, the FPC pre-press bonding head 81 descends to put the first section 12a of the FPC board 12 on the

first electrode section 11b of the LCD board 11. On the basis of the result of the recognition by the recognition cameras 83e and 83h, the table 83c of the press bonding section 83 moves in the directions of the arrows B11 and B12 to align the heating-pressurizing tool 83g with the insertion hole 53c of the index stage 53. After that, the heating-pressurizing tool 83g ascends to pinch the first section 12a of the FPC board 12 and the first electrode section 11b of the LCD board 11 between the heating-pressurizing tool 83g and the FPC pre-press bonding head 81, thereby exerting a pressure on the first section 12a and the first electrode section 11b. As a result, the first section 12a of the FPC board 12 is pre-press bonded onto the first electrode section 11b of the LCD board 11 with the ACF tape 71. After the completion of the pre-press bonding, the suction of the FPC board 12 by the FPC pre-press bonding head 81 is released. In this process, the FPC board 12 may be recognized by the recognition camera 83h and the LCD board 11 may be recognized by the recognition camera 83e. Otherwise, both the LCD board 11 and the FPC board 12 may be recognized by either one of the recognition cameras 83e and 83h.

As shown in Fig. 8, a depth $\alpha 1$ of the recess 53a of the index stage 53 is set so that a clearance $\alpha 2$ larger than a thickness of the FPC board 12 is made between the

index stage 53 and the second portion 81b of the FPC pre-press bonding head 81 when the first portion 81a of the FPC pre-press bonding head 81 is pressing the first section 12a of the FPC board 12 onto the first electrode section 11b of the LCD board 11. With this arrangement, interference between the FPC pre-press bonding head 81 and the index stage 53 is prevented when the first section 12a of the FPC board 12 is pressed onto the first electrode section 11b of the LCD board 11, resulting in that the first section 12a is reliably pressed onto the first electrode section 11b.

Subsequently, the rotating shaft 51 rotates another 90 degrees to move the index stage 53 to the final press bonding section 90. In the final press bonding section 90, the first section 12a of the FPC board 12 is pressed onto the first electrode section 11b of the LCD board 11 with a pressure larger than in the pre-press bonding section 80. As a result, the first section 12a is fixed to the first electrode section 11b. Further, the driver voltage supply lines 17a in the first electrode section 11b are electrically connected to the corresponding driver voltage supply lines 21a in the first section 12a.

The rotating shaft 51 then rotates another 90 degrees and the index stage 53 returns to the hand over section 60. In synchronization with the movement, the carry-out arm 102 moves to the hand over section 60. Then the carry-out head

103 descends onto the index stage 53, and the suction holes 103c and 103d of the carry-out head 103 suck the LCD board 11 and the FPC board 12. When the carry-out head 103 sucks the LCD board 11 and the FPC board 12, the suction by the index stage 53 is released. After the carry-out head 103 that has sucked the LCD board 11 and the FPC board 12 ascends, the carry-out arm 102 moves to above the loading plate 101c of the carry-out slider 101. The carry-out head 103 then descends again, and the LCD board 11 and the FPC board 12 are loaded on the loading plate 101c and sucked by the suction holes 101e. Synchronously, the suction by the carry-out head 103 is released. The loading plate 101c then moves together with the slide plate 101b to carry out the LCD board 11 and the FPC board 12 from the first mounting apparatus 31 to the transporting apparatus 33.

The operation of the transporting apparatus 33 will be described below. On the basis of a recognition result obtained by the recognition camera 135, the transporting head 134 moves along the guide rail 133b and is aligned with the FPC board 12 and LCD board 11 on the loading plate 101c of the carry-out slider 101 of the first mounting apparatus 31. The transporting head 134 then descends and sucks the FPC board 12 and the LCD board 11, and the suction by the loading plate 101c is released. Subsequently, the transporting head 134 ascends and moves

to the carry-in section 140 of the second mounting apparatus 32 together with the slide plate 133b. The LCD board 11 and the FPC board 12 may be conveyed from the first mounting apparatus 31 to the second mounting apparatus 32 by manual operation or other conveying apparatus without provision of the transporting apparatus 33.

Hereinbelow, the operation of the second mounting apparatus 32 will be described with reference to Fig. 4 and Figs. 13 to 19.

Initially, after moving to above the carry-in slider 141, the transporting head 134 of the transporting apparatus 33 descends. By this descent, the LCD board 11, the first portion 12g of the FPC board 12, and the second portion 12h of the FPC board 12 are respectively loaded on the LCD loading plate 141c, the fixed FPC loading plate 141g, and the movable FPC loading plate 141j of the carry-in slider 141. Then, the LCD board 11 is sucked by the suction holes 141d and the FPC board 12 is sucked by the suction holes 141h and 141n, whereas the suction by the transporting head 34 is released. At this stage, as shown in Fig. 23A, the movable FPC loading plate 141j is in intimate contact with the LCD loading plate 141c.

Then, the LCD loading plate 141c, the fixed FPC loading plate 141g, and the movable FPC loading plate 141j,

together with the slide plate 141b, move into the second mounting apparatus 32. After that, as shown by an arrow E30, the movable FPC loading plate 141j driven by the air cylinder S55 pivots in a horizontal plane with respect to the LCD loading plate 141c. As a result, as shown in Fig. 23B, the distal end of the movable FPC loading plate 141j moves away from the LCD loading plate 141c so that the movable FPC loading plate 141j and the LCD loading plate 141c form a shape like a letter V in plan view. As described above, the LCD board 11 and the first portion 12g of the FPC board 12 are respectively sucked and held on the LCD loading plate 141c and the fixed FPC loading plate 141g and the second portion 12h of the FPC board 12 is sucked and held on the movable FPC loading plate 141j. Accordingly, the formation of the shape like the letter V by the movable FPC loading plate 141j and the LCD loading plate 141c causes the link portion 12i of the FPC board 12 to bend the second portion 12h of the FPC board 12 so that it is separated from the second electrode section 11c of the LCD board 11. That is, the pivots of the movable FPC loading plate 141j cases exposure of the second electrode section 11c of the LCD board 11.

In the FPC board 12, as described above, the cut-out hole 22 decreasing the width D1 of the link portion 12i is provided so that the FPC board 12 bends easily. Therefore,

when the movable FPC loading plate 141j pivots, the second portion 12h of the FPC board 12 is reliably separated from the second electrode section 11c of the LCD board 11 so as to expose the second electrode section 11c of the LCD board 11.

Subsequently, the carry-in arm 142 moves to above the carry-in slider 141. After recognition of the LCD board 11 by the recognition camera 142d and correction of the position of the LCD board 11 on the basis of the recognition, the carry-in head 143 descends onto the LCD board 11 and the FPC board 12. Then, the LCD board 11 is sucked by the suction holes 143b and the FPC board 12 is sucked by the suction holes 143c and 143d, whereas the suction by the suction holes 141d, 141h, and 141n on the side of the carry-in slider 141 is released. As a result, the LCD board 11 and the FPC board 12 are held by the carry-in head 143. In this state, the FPC board 12 still retains its shape such that the second portion 12h is separated from the second electrode section 11c of the LCD board 11 (its shape that causes the second electrode section 11c of the of the LCD board 11 to be exposed).

Next, the carry-in arm 142 that has sucked and held the LCD board 11 and the FPC board 12 moves to the hand over section 160. In the hand over section 160, the carry-in head 143 moves along the guide rail 142c to align the

LCD board 11 over an index stage 153. The carry-in head 143 then descends to load the LCD board 11 and the FPC board 12 on the index stage 53. At this time, the second electrode section 11c of the LCD board 11 is positioned in the insertion hole 153e. The LCD board 11, the first portion 12g of the FPC board 12, and the second portion 12h of the FPC board 12 are respectively sucked by the suction holes 153b, 153c, and 153d of the index stage 153. Further, the suction by the suction holes 143b, 143c, and 143d of the carry-in head 143 is released. As a result, the LCD board 11 and the FPC board 12 are held on the index stage 153. Even in this state, the FPC board 12 still retains its shape such that the second portion 12h is separated from the second electrode section 11c of the LCD board 11.

Then, the rotating shaft 151 rotates 90 degrees in the direction of the arrow E5, thereby moving the index stage 153 to the ACF supply section 170. In the ACF supply section 170, ACF tape 171 is applied to the second electrode section 11c of the LCD board 11. As described above, the FPC board 12 on the index stage 153 has the shape such that the second portion 12h is separated from the second electrode section 11c of the LCD board 11, and therefore the ACF tape 171 can be applied reliably and smoothly to the second electrode section 11c.

The rotating shaft 151 then rotates another 90 degrees

in the direction of the arrow E5, thereby moving the index stage 153 to the pre-press bonding section 180. In the pre-press bonding section 180, the recognition camera 183g recognizes a position and a posture of the second electrode section 11c of the LCD board 11 by the marks 11e and 11f, and the recognition camera 183e recognizes a position and a posture of the FPC board 12 by the marks 12e and 12f.

As shown in Fig. 24A, according to the basis of the recognition result, the FPC pre-press bonding head 181 descends onto the second portion 12h of the FPC board 12. The second portion 12h of the FPC board 12 is then sucked by the suction holes 181a of the FPC pre-press bonding head 181, and the suction of the second portion 12h by the suction holes 153d of the index stage 153 is released. As a result, the second portion 12h of the FPC board 12 including the second section 12b is sucked by the FPC pre-press bonding head 181, while the LCD board 11 and the first portion 12g of the FPC board 12 remain being sucked by the index stage 153.

Subsequently, on the basis of the recognition result, the FPC pre-press bonding head 181 moves so as to align the second section 12b of the FPC board 12 with the second electrode section 11c of the LCD board 11. As shown in Fig. 24B, the FPC pre-press bonding head 181 initially moves in the direction shown by the arrow E9 (+Y direction). The

FPC pre-press bonding head 181 then rotates about the axis L5 (see Fig. 17) as shown in Fig. 24C (arrow E20). When the rotation is finished, the second section 12b of the FPC board 12 and the second electrode section 11c of the LCD board 11 are parallel to each other. The movement in the direction of the arrow E9 shown in Fig. 24B is made for the purpose of increasing the deflection of the link portion 12i of the FPC board 12 and thereby reducing a resistance caused by the deformation of the FPC board 12 during rotation of the FPC pre-press bonding head 181.

As shown in Fig. 24D, the FPC pre-press bonding head 181 then moves in the direction of the arrow E10 (-X direction) and in the direction of the arrow E9 (-Y direction). When the movement in the directions of the arrows E9 and E10 is finished, the second section 12b of the FPC board 12 has been aligned with the second electrode section 11c of the LCD board 11. The FPC pre-press bonding head 181 then descends as shown by an arrow E11 in Fig. 24D to put the second section 12b of the FPC board 12 on the second electrode section 11c of the LCD board 11.

The quantity of the movement of the FPC pre-press bonding head 181 in the directions of the arrows E9, E10, and E20 is calculated by the controller 34 (see Fig. 2) on the basis of the position of the second section 12b of the FPC board 12 and the position of the second electrode

section 11c of the LCD board 11 recognized by the recognition cameras 183e and 183g. The controller 34 moves the FPC pre-press bonding head 181 on the basis of the result of the calculation.

On the basis of the result of the recognition by the recognition cameras 183e and 183g, the table 183c of the press bonding section 183 then moves in the directions of the arrows E6 and E7 to align the heating-pressurizing tool 183d with the insertion hole 153e of the index stage 153. After that, the heating-pressurizing tool 183g ascends to pinch the second section 12b of the FPC board 12 and the second electrode section 11c of the LCD board 11 between the heating-pressuring tool 183g and the FPC pre-press bonding head 181, thereby exerting a pressure on the sections. As a result, the second section 12b of the FPC board 12 is pre-press bonded on the second electrode section 11c of the LCD board 11 with the ACF tape 171. After the completion of the pre-press bonding, the suction of the FPC board 12 by the FPC pre-press bonding head 181 is released. After that, the FPC pre-press bonding head 181 ascends as shown in Fig. 24E. In the above process, the FPC board 12 may be recognized by the recognition camera 183g and the LCD board 11 may be recognized by the recognition camera 183e. Otherwise, both the LCD board 11 and the FPC board 12 may be recognized by either one of the

recognition cameras 183e and 183g.

The rotating shaft 151 then rotates another 90 degrees, thereby moving the index stage 153 to the final press bonding section 190. In the final press bonding section 190, the second section 12b of the FPC board 12 is pressed on the second electrode section 11c of the LCD board 11 with a pressure larger than in the pre-press bonding section 180. As a result, the second section 12b is fixed to the second electrode section 11c. Further, driver voltage supply lines 21b in the second section 12b are electrically connected to corresponding driver voltage supply lines 17b in the second electrode section 11c.

The rotating shaft 151 then turns another 90 degrees, thereby returning the index stage 153 to the hand over section 160. In synchronization with the movement, the carry-out arm 202 moves to the hand over section 160. Then the carry-out head 203 descends onto the index stage 153, and the suction holes 203b and the nozzle 203d of the carry-out head 203 respectively suck the LCD board 11 and the FPC board 12. When the carry-out head 203 sucks the LCD board 11 and the FPC board 12, the suction by the index stage 153 is released. After the carry-out head 203 that has sucked the LCD board 11 and the FPC board 12 ascends, the carry-out arm 202 moves to above the loading plate 201c of the carry-out slider 201. The carry-out head 203 then

descends again to load the LCD board 11 and the FPC board 12 on the loading plate 201c, and the LCD board 11 and the FPC board 12 are sucked by the suction holes 201e and 201f. In synchronization with the operations, the suction by the carry-out head 203 is released. After that, the loading plate 201c moves together with the slide plate 201b to carry out the LCD board 11 and the FPC board 12 to a stocker 212 outside the second mounting apparatus 32 (see Fig. 2).

Figs. 25 to 29 illustrate other examples of the carry-in slider 141 of the second mounting apparatus 32.

In an example shown in Figs. 25 and 26, to an end surface of a movable FPC loading plate 141j facing an LCD loading plate 141c is fixed a bending plate 141q having a distal end protruding from surfaces of the movable FPC loading plate 141j and the LCD loading plate 141c on which an FPC board 12 and an LCD board are to be loaded (upper surfaces in the drawing). In this example, when an LCD board 11 and an FPC board 12 are supplied from the transporting head 34 of the transporting apparatus 33, a distal end of the movable FPC loading plate 141j moves away from the LCD loading plate 141c so that the movable FPC loading plate 141j and the LCD loading plate 141c form a shape like a letter V. However, before the arrival at the hand over section 160, the plates 141j and 141c are closed

as shown in Fig. 25. As a result, the second portion 12h of the FPC board 12 is bent upward by the bending plate 141q, so that the second electrode section 11c of the LCD board 11 is exposed. The bending plate 141q may be constructed integrally with the movable FPC loading plate 141j.

In an example shown in Figs. 27 and 28, the movable FPC loading plate is not provided and a second portion 12h (a second section 12b) of an FPC board 12 is arranged on a lower surface side of an LCD board 11 in the drawings so that a second electrode section 11c of the LCD board 11 is exposed.

In an example shown in Fig. 29, a second portion 12h of an FPC board 12 is sucked by a suction nozzle 214 that moves with a slide plate 141b, so that a second electrode section 11c of an LCD board 11 is exposed.

The invention is not limited to the above embodiments, and various modifications may be made therein.

For example, the component mounting equipment and method of the invention may be employed for mounting film-like components other than FPC boards (e.g., tape carrier packages (TCP)) on plate-like components other than LCD boards (e.g., electroluminescence devices (EL devices), plasma display panels (PDP), or conventional printed circuit boards). Shapes and pitches of the suction holes

in the carry-in slider and the like of the first and second mounting apparatuses are not limited to those shown in the drawings and may be set appropriately in accordance with sizes and shapes of an LCD board and an FPC board. In the first and second mounting apparatuses adopt carry-in sliders and like which mechanically hold an LCD board and an FPC board instead of sucking the boards. For the ACF supply sections of the first and second mounting apparatuses may be substituted ACP supply sections for supplying ACP onto the electrode sections of an LCD board.

Although the present invention has been fully described by way of the examples with reference to the accompanying drawings, it is to be noted here that various changes and modifications will be apparent to those who skilled in the art. Therefore, unless such changes and modifications otherwise depart from the spirit and scope of the present invention, they should be construed as being therein.

CLAIMS

1. An electronic component (10) comprising a display board (11) and a flexible printed-circuit board (12) on which a driver circuit for the display board is formed,

the display board having a display section (11a), a first electrode section (11b) in which ends of a plurality of driver voltage supply lines (17a) are disposed on one side edge extending in a first direction (A1), and a second electrode section (11c) in which ends of a plurality of driver voltage supply lines (17b) are disposed on another side edge extending in a second direction (A2), the first direction and the second direction crossing each other at a predetermined angle,

the flexible printed-circuit board having a first section (12a) in which ends of a plurality of driver voltage supply lines (21a) are disposed on one side edge extending in the first direction and which is placed onto the first electrode section of the display board and a second section (12b) in which ends of a plurality of driver voltage supply lines (21b) are disposed on other side edge extending in the second direction and which is placed onto the second electrode section of the display board.

2. An electronic component according to claim 1, wherein the flexible printed-circuit board further comprises a cut-

out hole (22) at a connection between the first section and the second section.

3. A flexible printed-circuit board (12) on which a driver circuit for a display board (11) is formed, comprising:

a first section (12a) in which ends of a plurality of driver voltage supply lines (21a) are disposed on one side edge extending in a first direction (A1); and

a second section (12b) in which ends of a plurality of driver voltage supply lines (21b) are disposed on other side edge extending in a second direction (A2), the first direction and the second direction crossing each other at a predetermined angle.

4. A flexible printed-circuit board according to claim 3, further comprising a cut-out hole (22) at a connection between the first section and the second section.

5. A component mounting equipment (30) for mounting a film-like component (12) onto a plate-like component (11), the plate-like component having a first placement section (11b) which is provided on one side edge and a second placement section (11c) which is provided on other side edge, and the film-like component having a first section

(12a) to be placed which is provided on one side edge and a second section (12b) to be placed which is provided on another side edge, comprising:

a first mounting apparatus (31) for placing the first section of the film-like component onto the first placement section of the plate-like component; and

a second mounting apparatus (32) for placing the second section of the film-like component onto the second placement section of the plate-like component.

6. A component mounting equipment according to claim 5, wherein the first mounting apparatus comprises:

an adhesive supply section (70) for supplying adhesive to the first placement section of the plate-like component;

a pre-press bonding section (80) for aligning the first section of the film-like component with the first placement section of the plate-like component, and pressing the fist section onto the first placement section with a first pressing force;

a final press bonding section (90) for pressing the first section of the film-like component onto the first placement section of the plate-like component with a second pressing force, thereby fixing the first section of the film-like component onto the first placement section of the plate-like component;

a transfer section (50) for holding the plate-like component, and transferring the plate-like component sequentially to the adhesive supply section, the pre-press bonding section, and the final press bonding section; and

a film-like component supply section (110) for supplying the film-like component to the pre-press bonding section.

7. A component mounting equipment according to claim 6, wherein the transfer section comprises stages (53) each provided with a recess (53a) where the plate-like component is to be loaded,

wherein the pre-press bonding section comprises a pre-press bonding head (81) that has a first portion for holding a portion (12g) of the film-like component including the first section and a second portion (12h) for holding a portion of the film-like component including the second section, and that presses the first section of the film-like component onto the first placement section of the plate-like component loaded on the index stage, and

wherein a depth ($\alpha 1$) of the recess of the index stage is set so that a clearance ($\alpha 2$) larger than a thickness of the film-like component is made between the index stage and the second portion of the pre-press bonding head when the first portion of the pre-press bonding head is pressing the

first section of the film-like component onto the first placement section of the plate-like component.

8. A component mounting equipment according to any one of claims 5 to 7, wherein the second mounting apparatus comprises:

an adhesive supply section (170) for supplying adhesive onto the second placement section of the plate-like component;

a pre-press bonding section (180) for aligning the second section of the film-like component with the second placement section of the plate-like component, and pressing the second section onto the second placement section;

a final press bonding section (190) for pressing the second section of the film-like component onto the second placement section of the plate-like component with a second pressing force, thereby fixing the second section of the film-like component onto the second placement section of the plate-like component; and

a transfer section (150) for transferring the plate-like component and the film-like component of which the first section has been fixed onto the first placement section of the plate-like component sequentially to the adhesive supply section, the pre-press bonding section, and the final press bonding section,

wherein the transfer section comprises a first holding mechanism (153b) for holding the plate-like component, a second holding mechanism (153c) for holding the portion of the film-like component including the first section, and a third holding mechanism (153d) for holding the portion of the film-like component including the second section, and

wherein the third holding mechanism holds the film-like component with the second section separated from the second placement section of the plate-like component in the adhesive supply section, and releases the second section of the film-like component in the pre-press bonding section.

9. A component mounting equipment according to claim 8, wherein the pre-press bonding section of the second mounting apparatus comprises:

a recognition section (183e, 183g) for recognizing the plate-like component and the film-like component; and

an alignment head (181) for holding the second section of the film-like component, moving the second section of the film-like component on a basis of recognition by the recognition section, thereby aligning the second section with the second placement section of the plate-like component.

10. A component mounting equipment according to claim 8 or

claim 9, wherein the second mounting apparatus further comprises a carry-in section (140) for supplying to the transfer section the plate-like component and the film-like component of which the first section has been fixed onto the first placement section of the plate-like component, and

wherein the carry-in section deforms the film-like component so that the second section is separated from the second placement section of the plate-like component, and supplies the plate-like component and the film-like component to the transfer section while retaining deformation of the film-like component.

11. A component mounting equipment according to any one of claims 5 to 10, further comprising a transporting apparatus (33) that connects the first mounting apparatus and the second mounting apparatus, and that transports from the first mounting apparatus to the second mounting apparatus the plate-like component and the film-like component of which the first section has been fixed onto the first placement section of the plate-like component by the first mounting apparatus.

12. A component mounting equipment according to any one of claims 5 to 11, wherein the plate-like component is a

liquid crystal display board, and

wherein the film-like component is a flexible printed-circuit board on which a driver circuit for the liquid crystal display board is formed.

13. A mounting apparatus (31) for mounting a film-like component (12) onto a plate-like component (11), the plate-like component having a first placement section (11b) provided on one side edge and a second placement section (11c) provided on other side edge, and the film-like component having a first section (12a) to be fixed provided on one side edge and a second section (12b) to be fixed provided on other side edge, comprising:

an adhesive supply section (70) for supplying adhesive to the first placement section of the plate-like component;

a pre-press bonding section (80) for aligning the first section of the film-like component with the first placement section of the plate-like component, and pressing the first section onto the first placement section with a first pressing force;

a final press bonding section (90) for pressing the first section of the film-like component onto the first placement section of the plate-like component with a second pressing force, thereby fixing the first section of the film-like component to the first placement section of the

plate-like component;

a transfer section (50) for holding the plate-like component, and transferring the plate-like component sequentially to the adhesive supply section, the pre-press bonding section, and the final press bonding section; and

a film-like component supply section (110) for supplying the film-like component to the pre-press bonding section.

14. A mounting apparatus according to claim 13, wherein the transfer section comprises stages (53) each provided with a recess (53a) where the plate-like component is to be loaded,

wherein the pre-press bonding section comprises a pre-press bonding head (81) that has a first portion (81a) for holding a portion (12g) of the film-like component including the first section and a second portion (81b) for holding a portion of the film-like component including the second section, and that presses the first section of the film-like component onto the first placement section of the plate-like component loaded on the index stage, and

wherein a depth ($\alpha 1$) of the recess of the index stage is set so that a clearance ($\alpha 2$) larger than a thickness of the film-like component is made between the index stage and the second portion of the pre-press bonding head when the

first portion of the pre-press bonding head is pressing the first section of the film-like component onto the first placement section of the plate-like component.

15. A mounting apparatus (32) for mounting a film-like component (12) onto a plate-like component (11), the plate-like component having a first placement section (11b) provided on one side edge and a second placement section (11c) provided on other side edge, and the film-like component having a first section (12a) to be fixed provided on one side edge and a second section (12b) to be fixed provided on other side edge, comprising:

an adhesive supply section (170) for supplying adhesive onto the second placement section of the plate-like component;

a pre-press bonding section (180) for aligning the second section of the film-like component with the second placement section of the plate-like component, and pressing the second section onto the second placement section with a first pressing force;

a final press bonding section (190) for pressing the second section of the film-like component onto the second placement section of the plate-like component with a second pressing force, thereby fixing the second section of the film-like component onto the second placement section of

the plate-like component; and

a transfer section (150) for transferring the plate-like component and the film-like component of which the first section has been fixed to the first placement section of the plate-like component sequentially to the adhesive supply section, the pre-press bonding section, and the final press bonding section,

wherein the transfer section having a first holding mechanism (153a) for holding the plate-like component, a second holding mechanism (153c) for holding a portion (12g) of the film-like component including the first section, and a third holding mechanism (153d) for holding a portion (12h) of the film-like component including the second section, and

wherein the third holding mechanism holds the film-like component with the second section separated from the second placement section of the plate-like component in the adhesive supply section, and releases the second section of the film-like component in the pre-press bonding section.

16. A mounting apparatus according to claim 15, wherein the pre-press bonding section comprises:

a recognition section (183e, 183g) for recognizing the plate-like component and the film-like component; and

an alignment head (181) for holding the second section

of the film-like component, and moving the second section of the film-like component on a basis of recognition by the recognition section, thereby aligning the second section with the second placement section of the plate-like component.

17. A mounting apparatus according to claim 15 or claim 16, further comprising a carry-in section (140) for supplying to the transfer section the plate-like component and the film-like component of which the first section has been fixed onto the first placement section of the plate-like component, and

wherein the carry-in section deforms the film-like component so that the second section is separated from the second placement section of the plate-like component, and supplies the plate-like component and the film-like component to the transfer section while retaining deformation of the film-like component.

18. A component mounting method for mounting a film-like component (12) onto a plate-like component (11), the plate-like component having a first placement section (11b) provided on one side edge and a second placement section (11c) provided on other side edge, and the film-like component having a first section (12a) to be fixed provided

on one side edge and a second section (12b) to be fixed provided on other side edge comprising:

placing the first section of the film-like component to the first placement section of the plate-like component; and

placing the second section of the film-like component onto the second placement section of the plate-like component.

19. A component mounting method according to claim 18, wherein the placement of the second section onto the second placement section comprises:

supplying adhesive to the second placement section of the plate-like component;

aligning the second section of the film-like component with the second placement section of the plate-like component, and pre-press bonding the second section onto the second placement section with a first pressing force; and

finally press bonding the second section of the film-like component onto the second placement section of the plate-like component with a second pressing force,

wherein the film-like component is held with the second section separated from the second placement section of the plate-like component when the adhesive is supplied

to the second placement section, and

wherein the second section of the film-like component is released when the second portion is pre-press bonded onto the second placement section.

Fig.1A

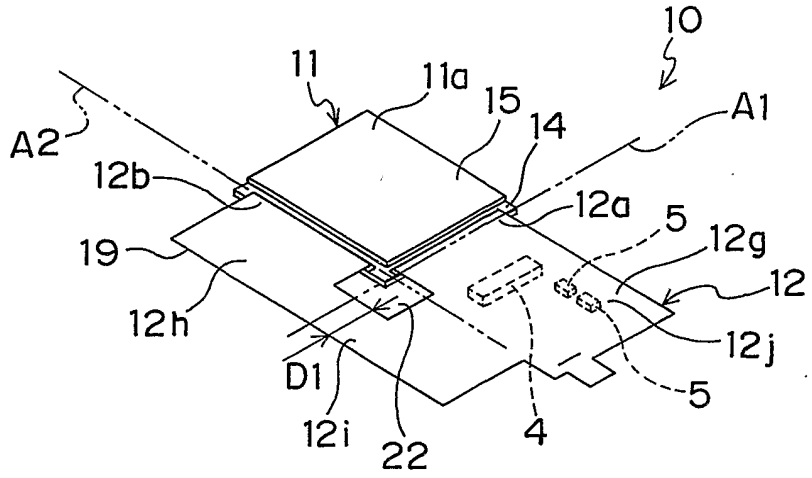
10
11
11a
15
14
A1
A2
12b
12a
5
12g
19
12
12h
12j
D1
5
12i
22
4

Fig.1B

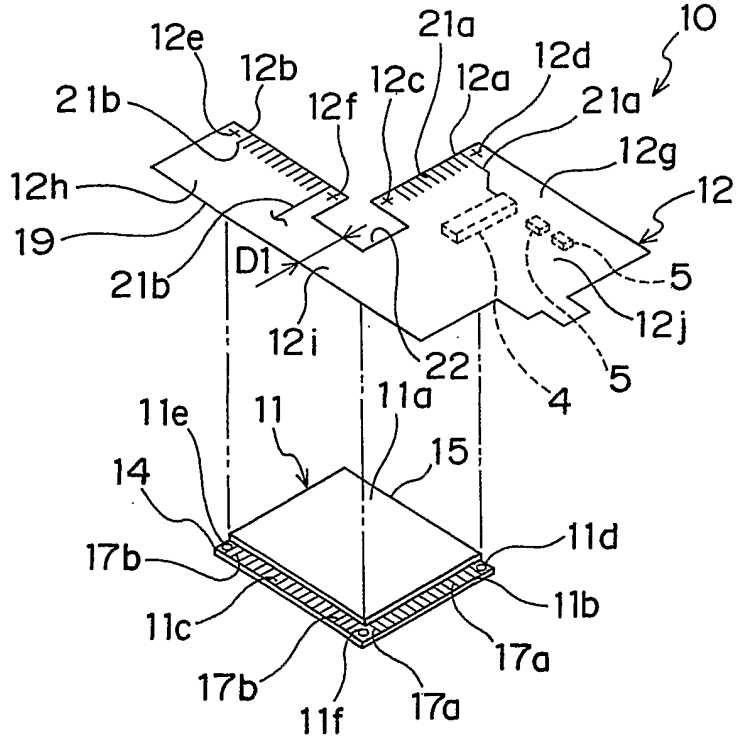
12e
12b
21a
12d
10
21b
12f
12c
12a
21a
12g
12h
12
19
D1
5
21b
12j
12i
22
5
4
11e
11
11a
15
14
11d
17b
11b
11c
17a
17b
17a
11f

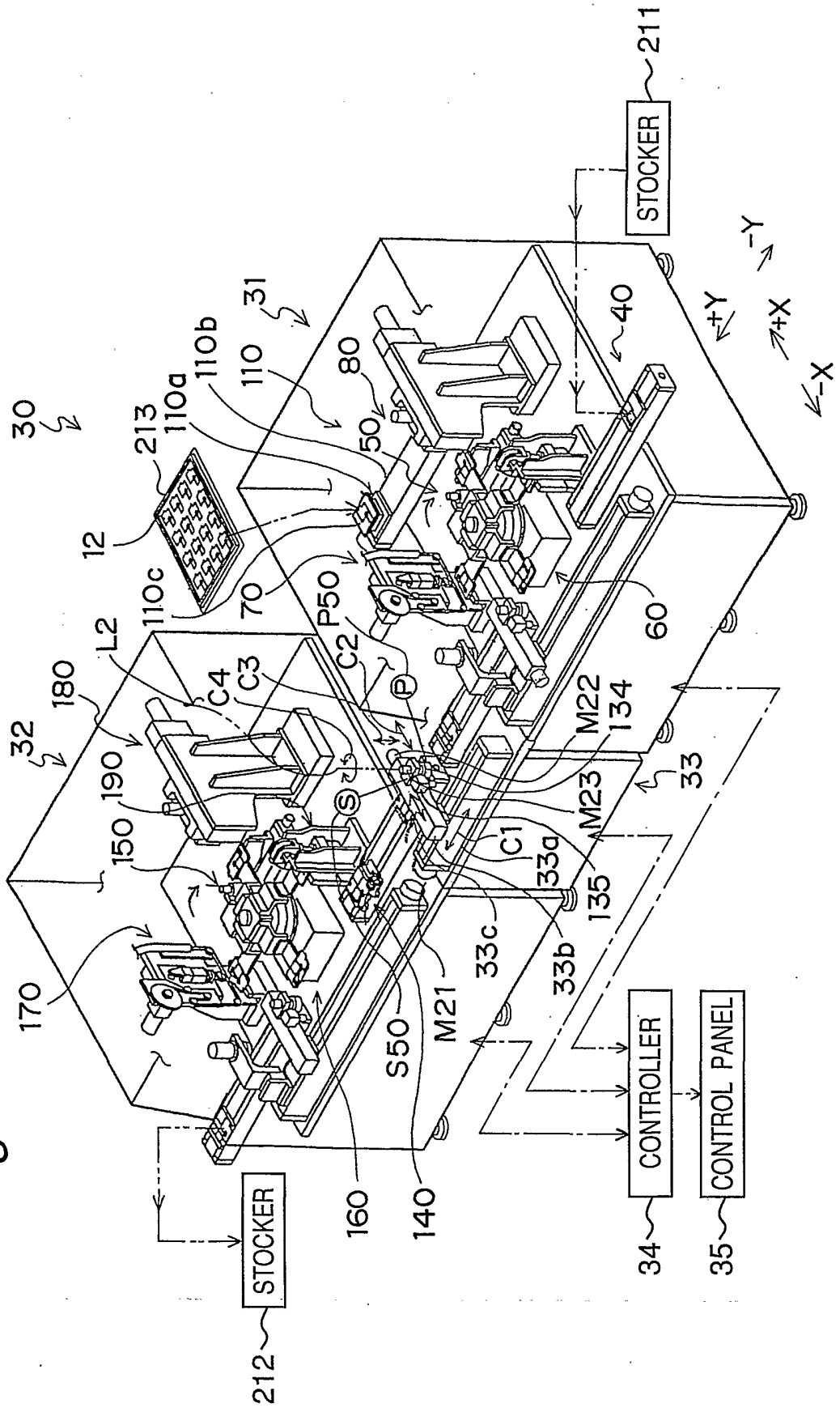
STOCKER
211
STOCKER
212
CONTROLLER
34
CONTROL PANEL
35
30
31
32
33
40
12
213
110a
110b
110
110c
80
50
70
60
P50
C2
C3
C4
L2
180
190
150
170
160
140
S50
M21
33c
33b
33a
C1
135
M23
M22
134
+Y
-Y
+X
-X

Fig.2

Fig.3

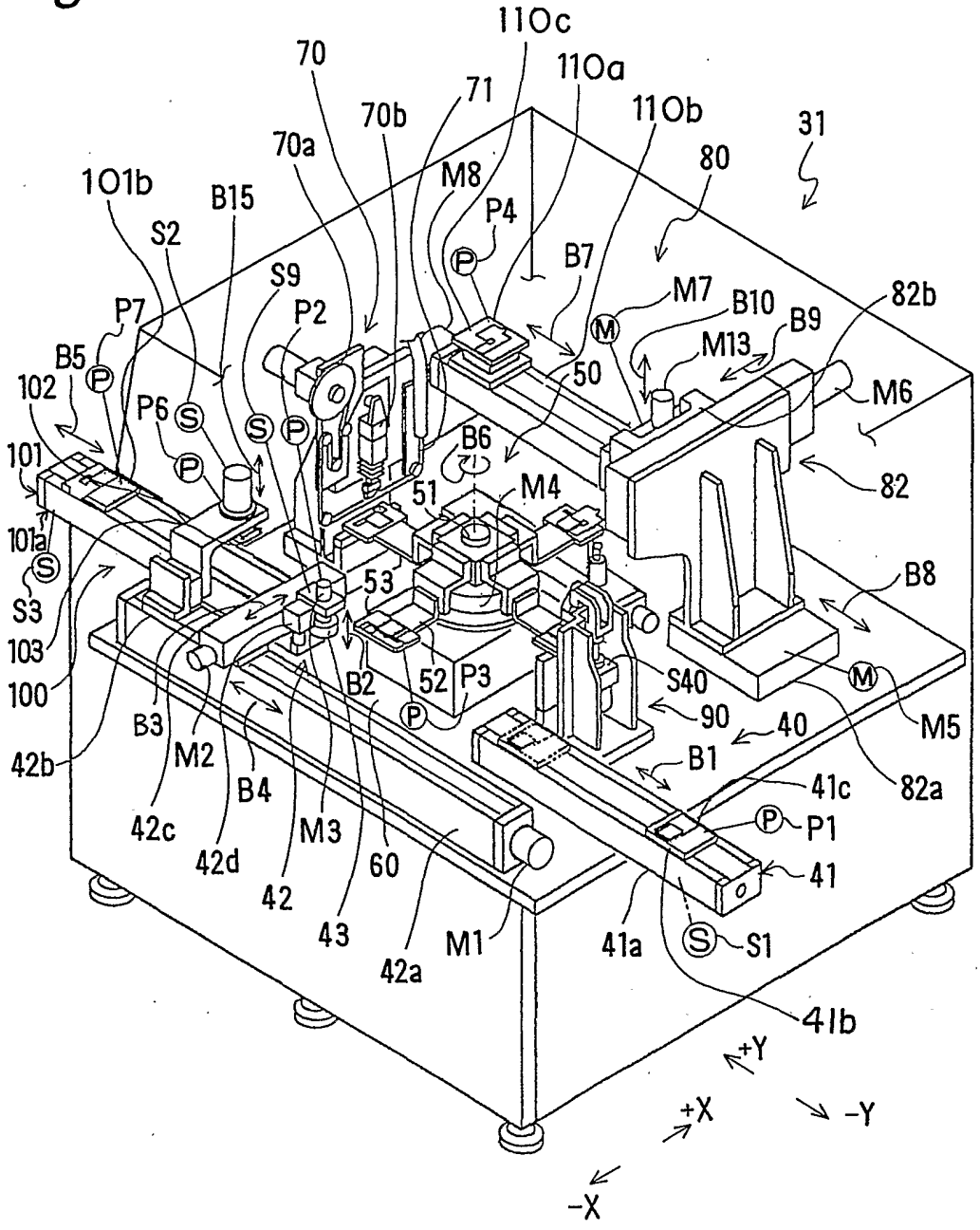
110c
70
110a
71
70b
110b
31
70a
80
101b
B15
M8
P4
S2
B7
S9
M7
B10
82b
P7
P2
B9
M13
B5
50
M6
102
P6
B6
101
82
51
M4
101a
53
B8
S3
103
100
B2
52
P3
S40
M5
B3
90
40
42b
M2
B1
B4
41c
82a
42c
M3
P1
42d
60
41
42
43
M1
41a
S1
42a
41b
+Y
+X
-Y
-X

Fig.4

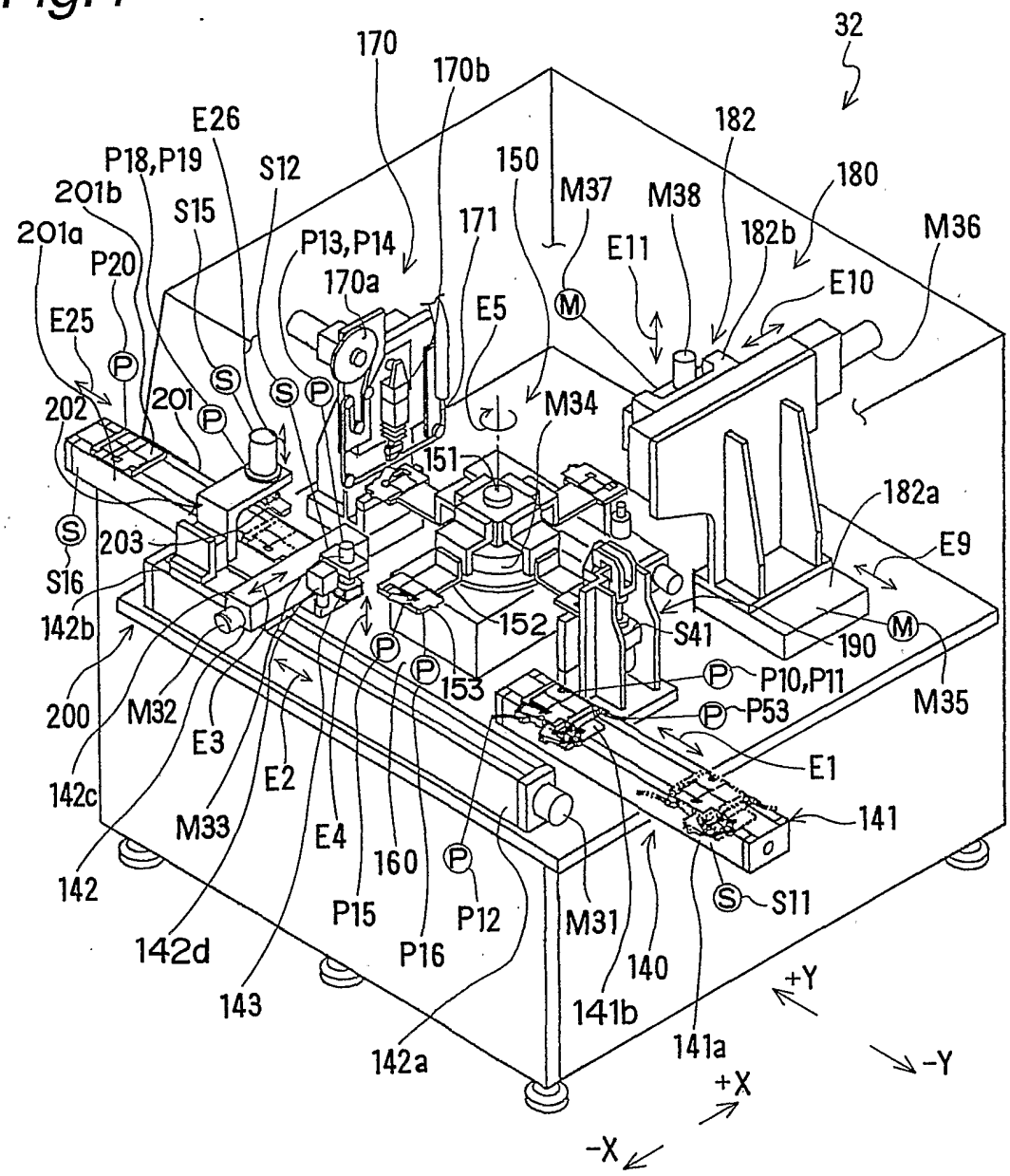
32
170
170b
E26
182
P18,P19
S12
150
M37
M38
180
201b
S15
171
182b
M36
201a
P13,P14
E11
P20
170a
E10
E5
E25
M34
202
201
151
182a
203
E9
S16
142b
152
S41
190
P10,P11
153
M35
200
M32
P53
E3
E1
142c
E2
141
M33
E4
160
142
P15
P12
M31
S11
142d
P16
140
143
141b
+Y
142a
141a
-Y
+X
-X

Fig.5

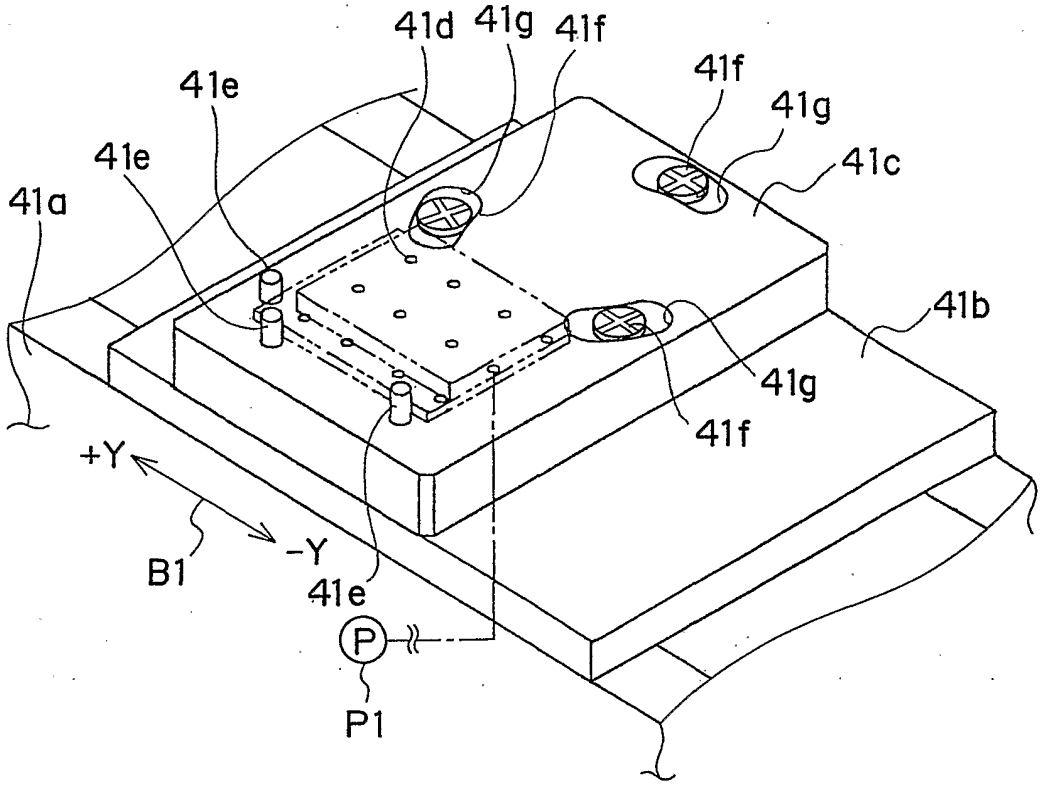
41d
41g
41f
41e
41f
41g
41e
41c
41a
41b
41g
41f
+Y
B1
-Y
41e
P
P1

Fig.6

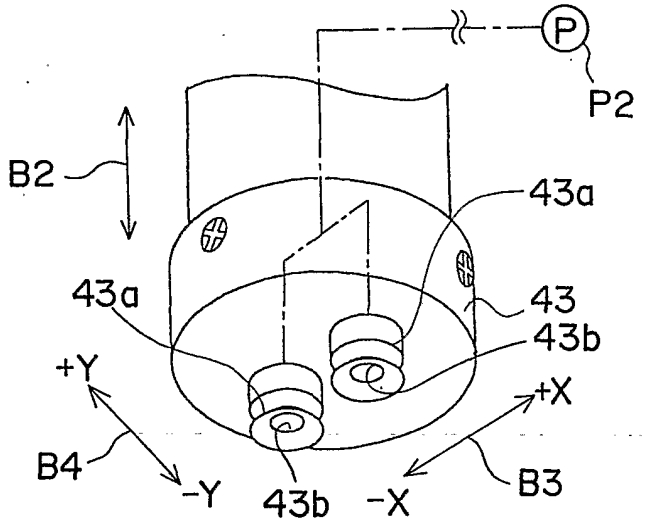
P
P2
B2
43a
43a
43
43b
+Y
+X
B4
-Y
43b
-X
B3

Fig.7

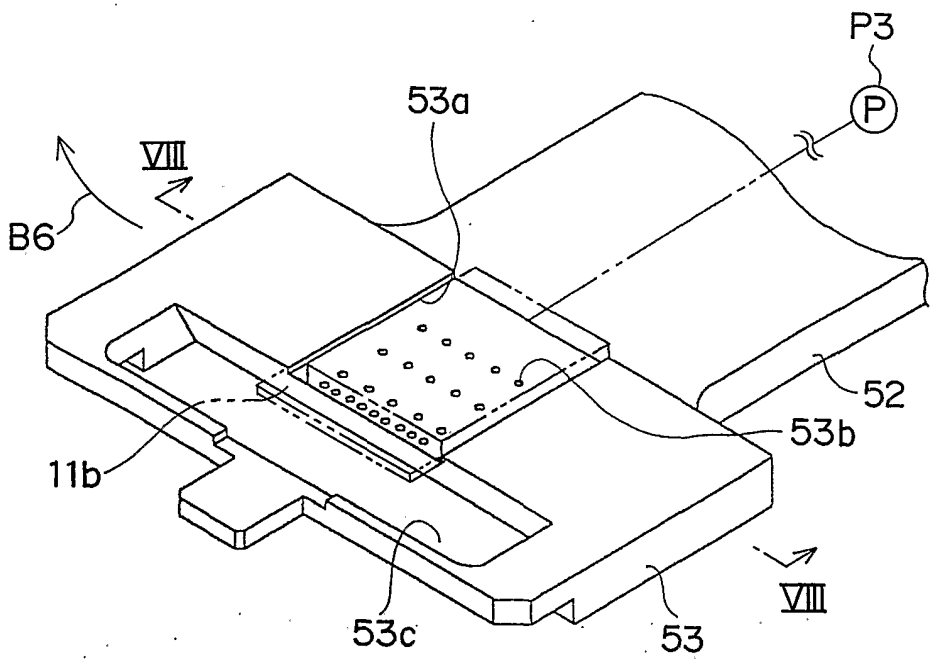
P3
P
53a
VIII
B6
52
53b
11b
VIII
53c
53

Fig.8

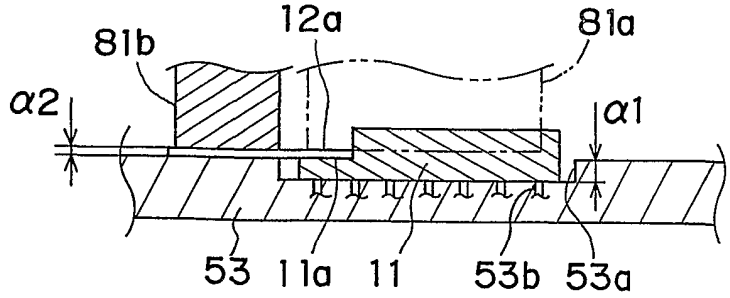
81b
12a
81a
α2
α1
53
11a
11
53b
53a

Fig.9

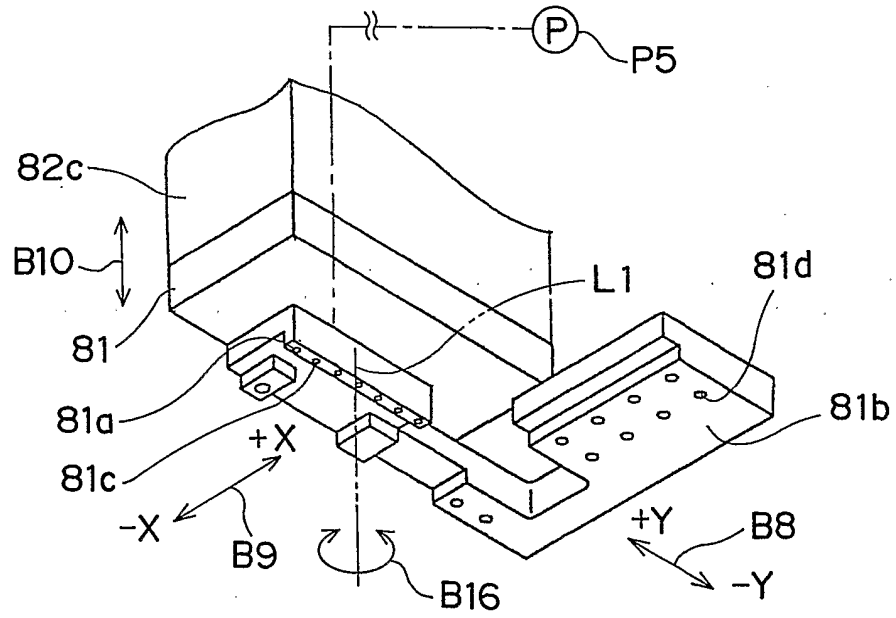

Fig.10

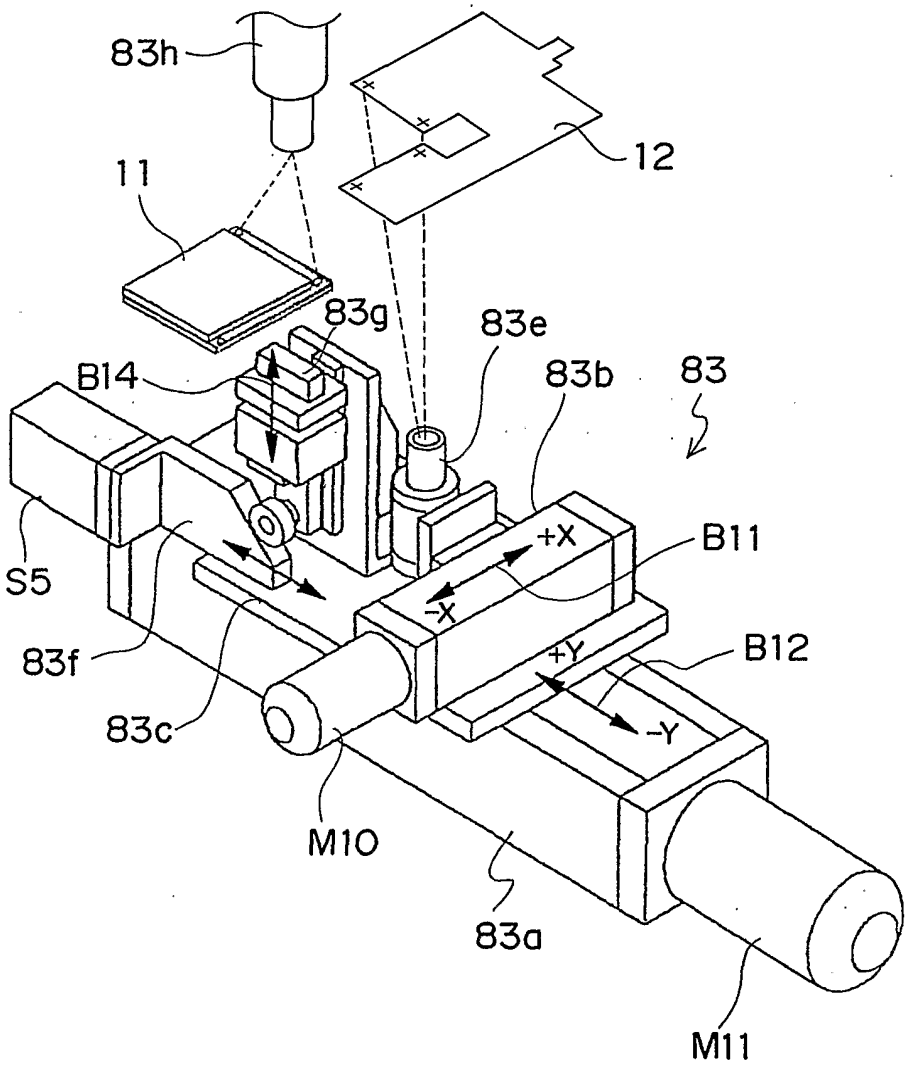

Fig.11

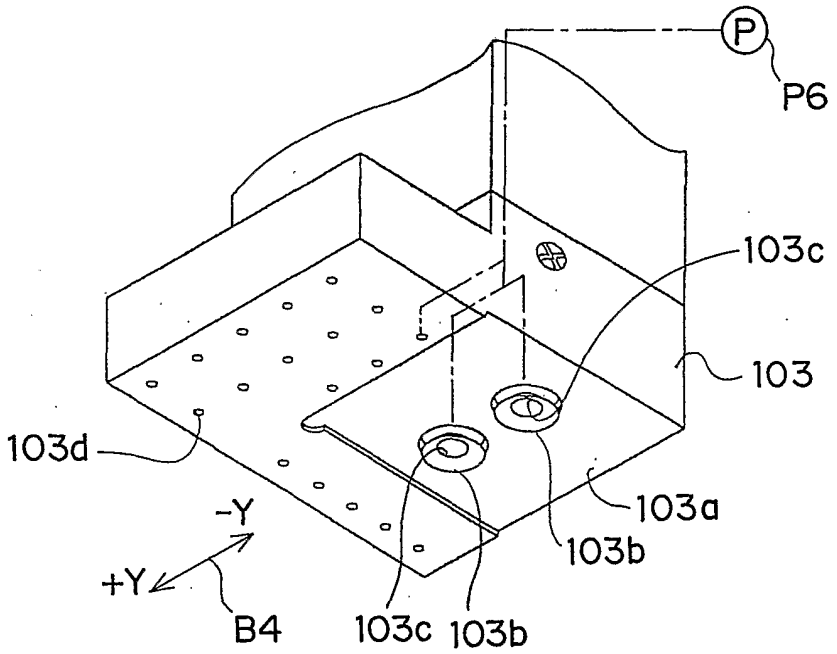

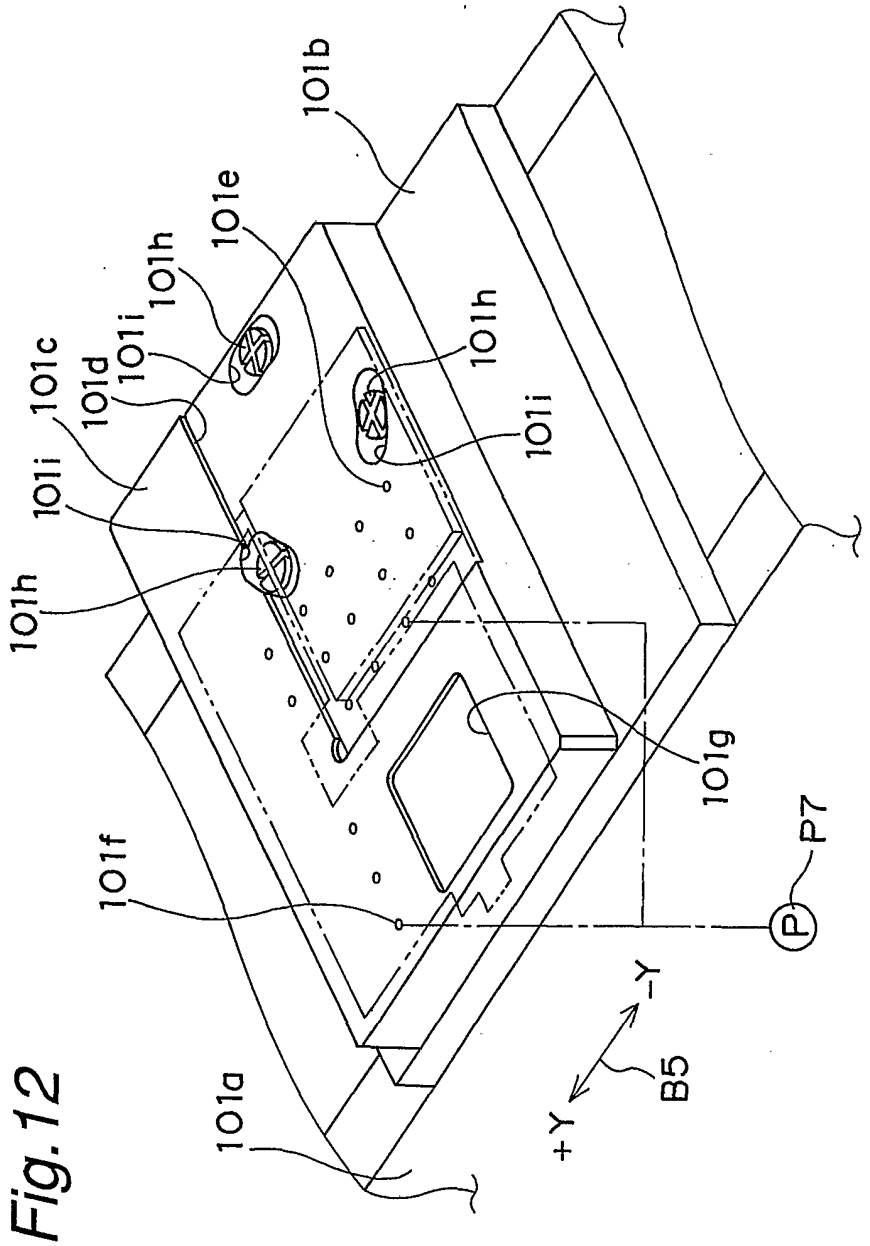
101b
101e
101h
101i
101c
101d
101i
101h
101i
101h
101i
101g
101f
P7
P
-Y
+Y
B5
101a

Fig. 12

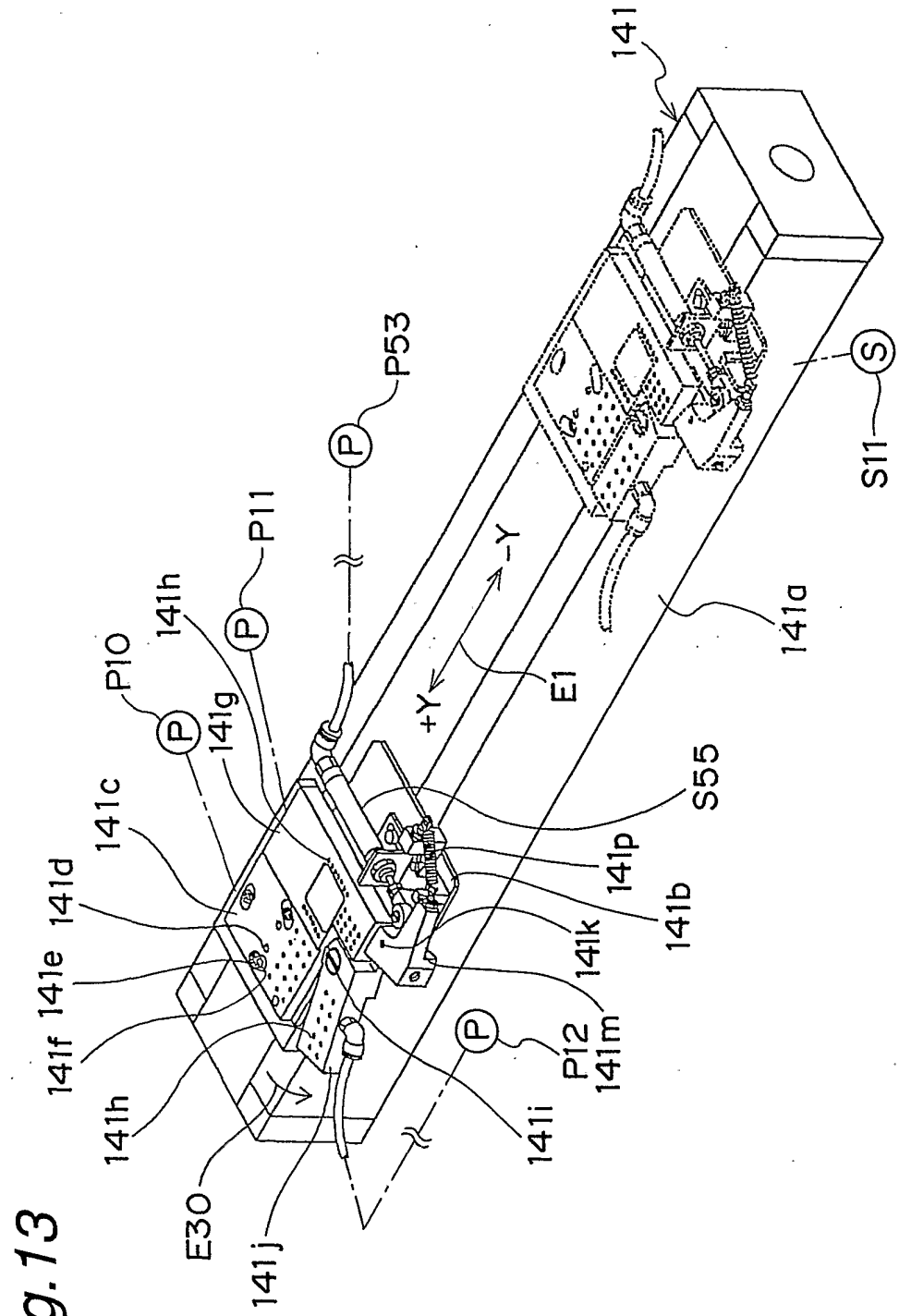
141
P53
P11
141h
P10
141g
141c
141d
141e
141f
141h
E30
141j
141i
P12
141m
141k
141b
141p
S55
E1
-Y
+Y
141a
S11

Fig. 13

Fig.14

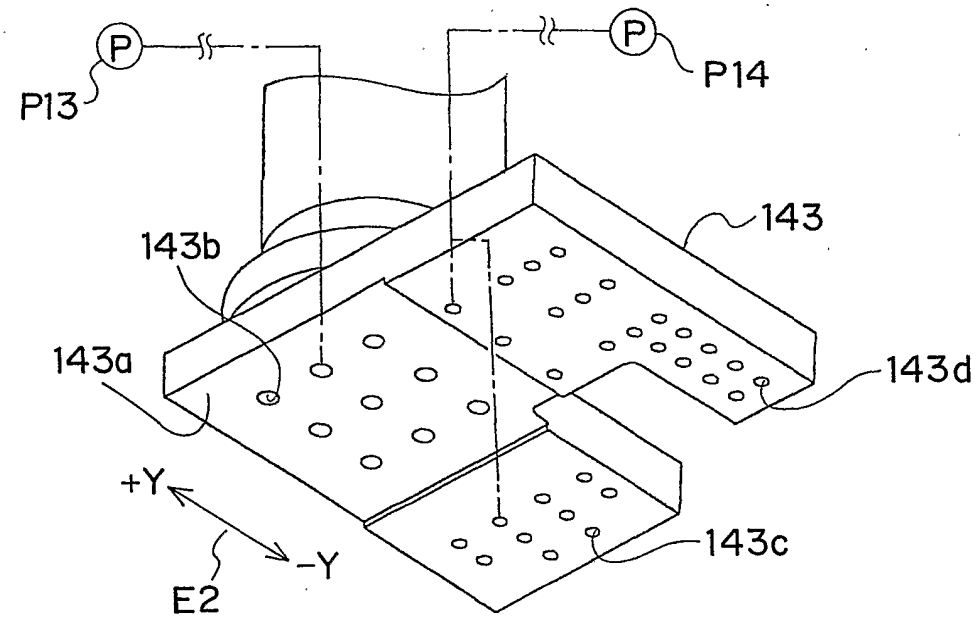
P
P13
P
P14
143
143b
143a
143d
+Y
-Y
E2
143c

Fig.15

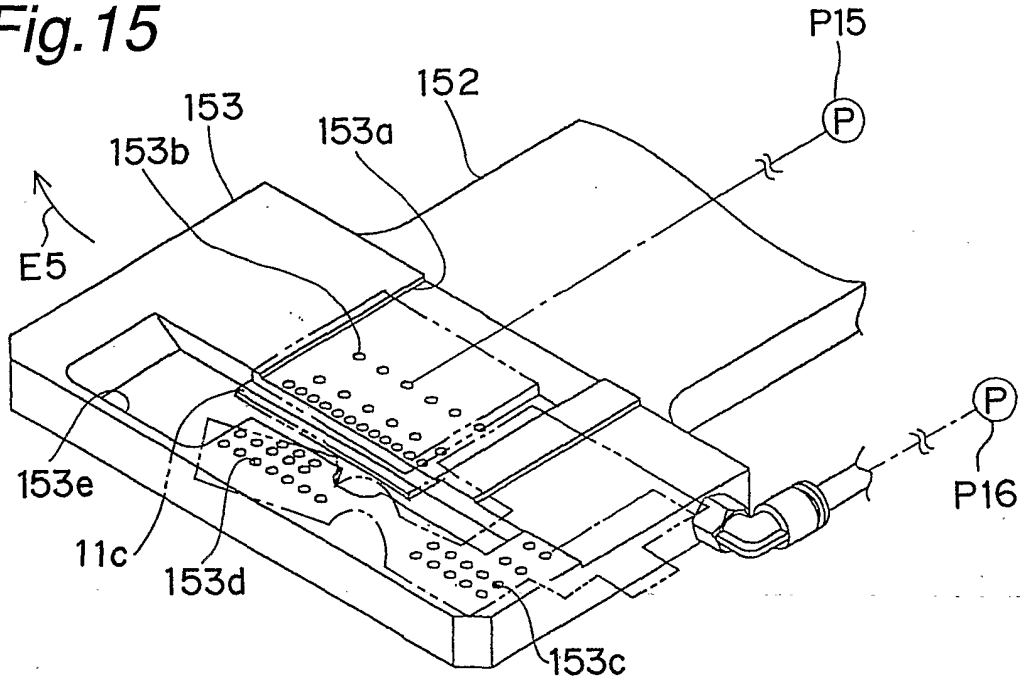
P15
P
152
153
153b
153a
E5
P
P16
153e
11c
153d
153c

Fig.16

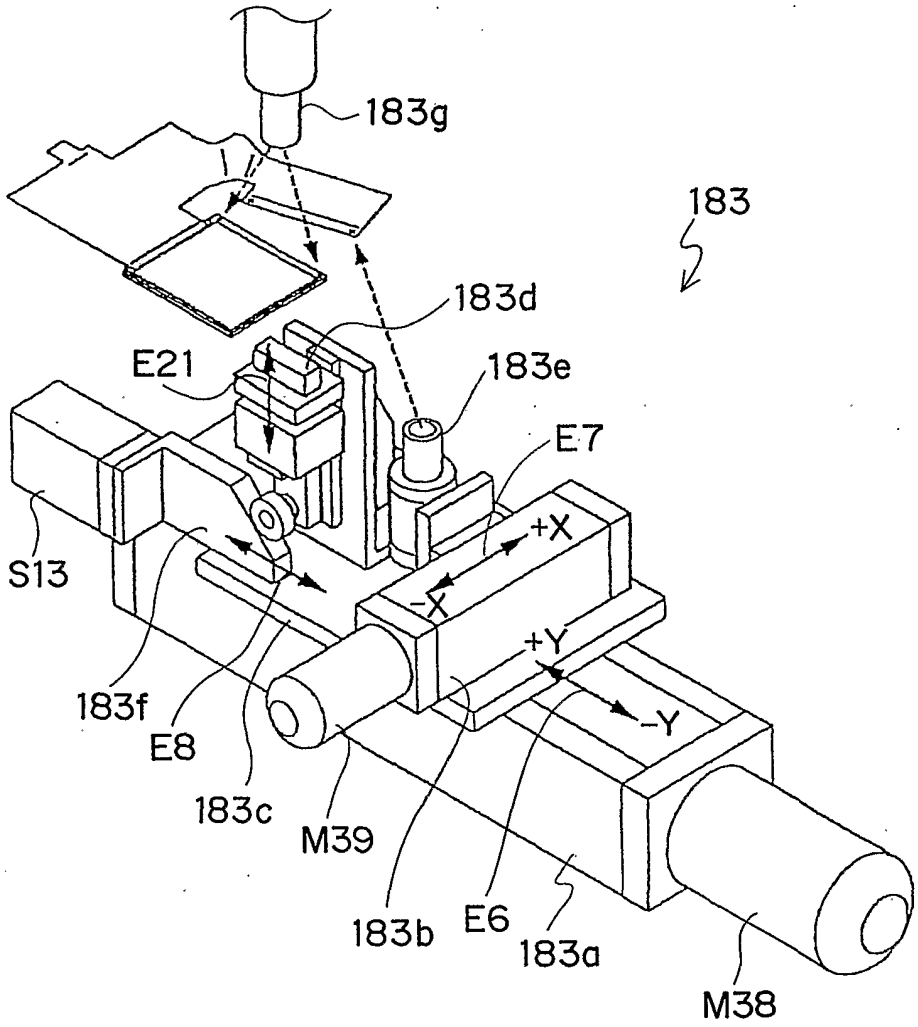
183g
183
183d
E21
183e
E7
+X
S13
-X
+Y
183f
E8
-Y
183c
M39
183b
E6
183a
M38

Fig.17

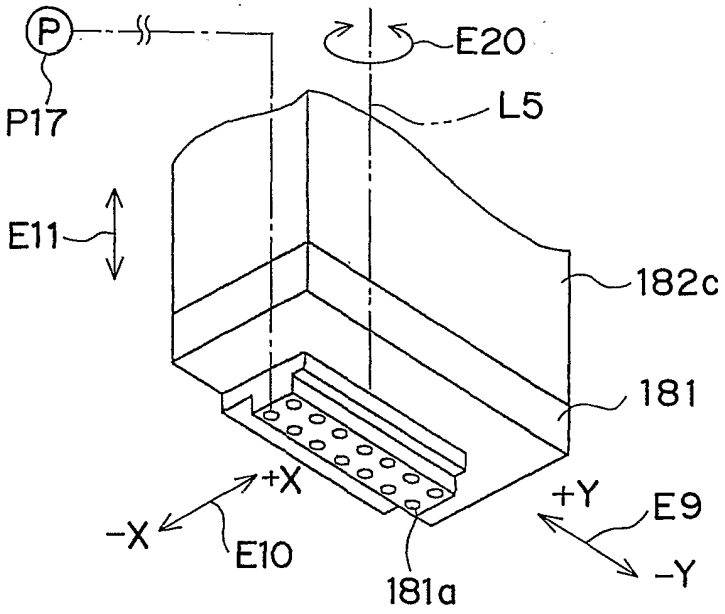
P
P17
E20
L5
E11
182c
181
+X
-X
E10
+Y
E9
-Y
181a

Fig.18

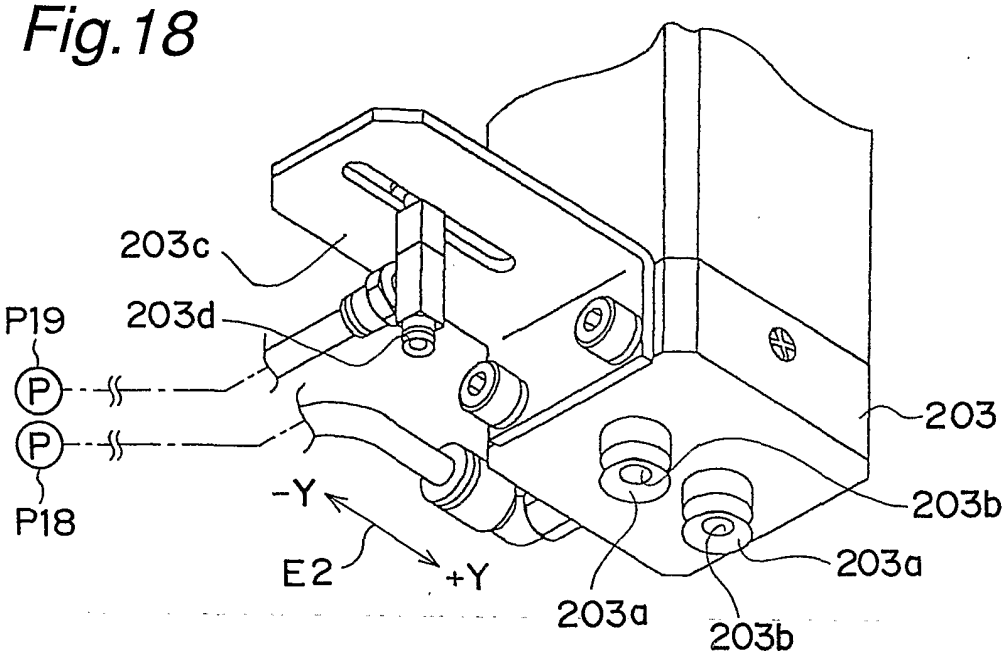
203c
P19
203d
P
P
P18
-Y
E2
+Y
203
203b
203a
203a
203b

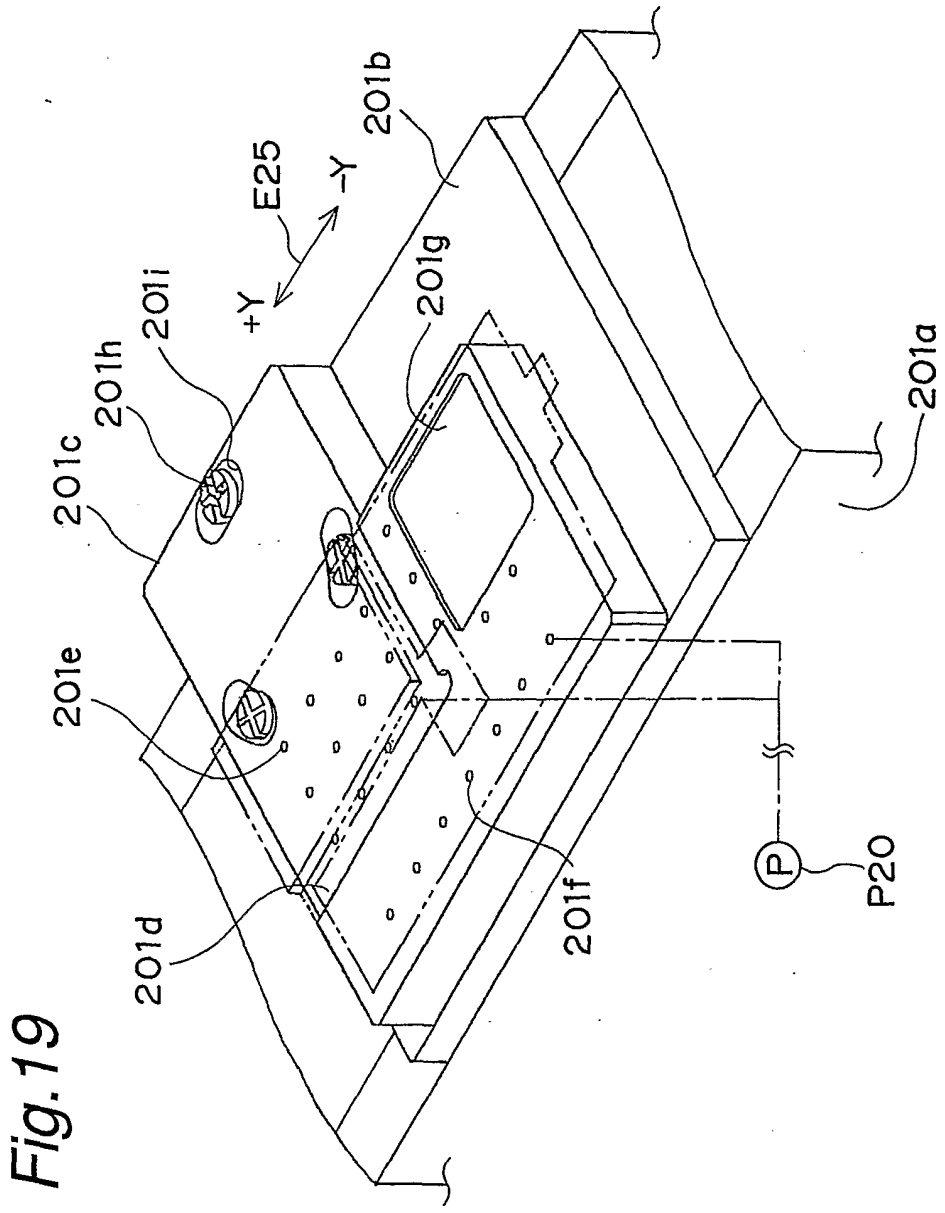

Fig.19

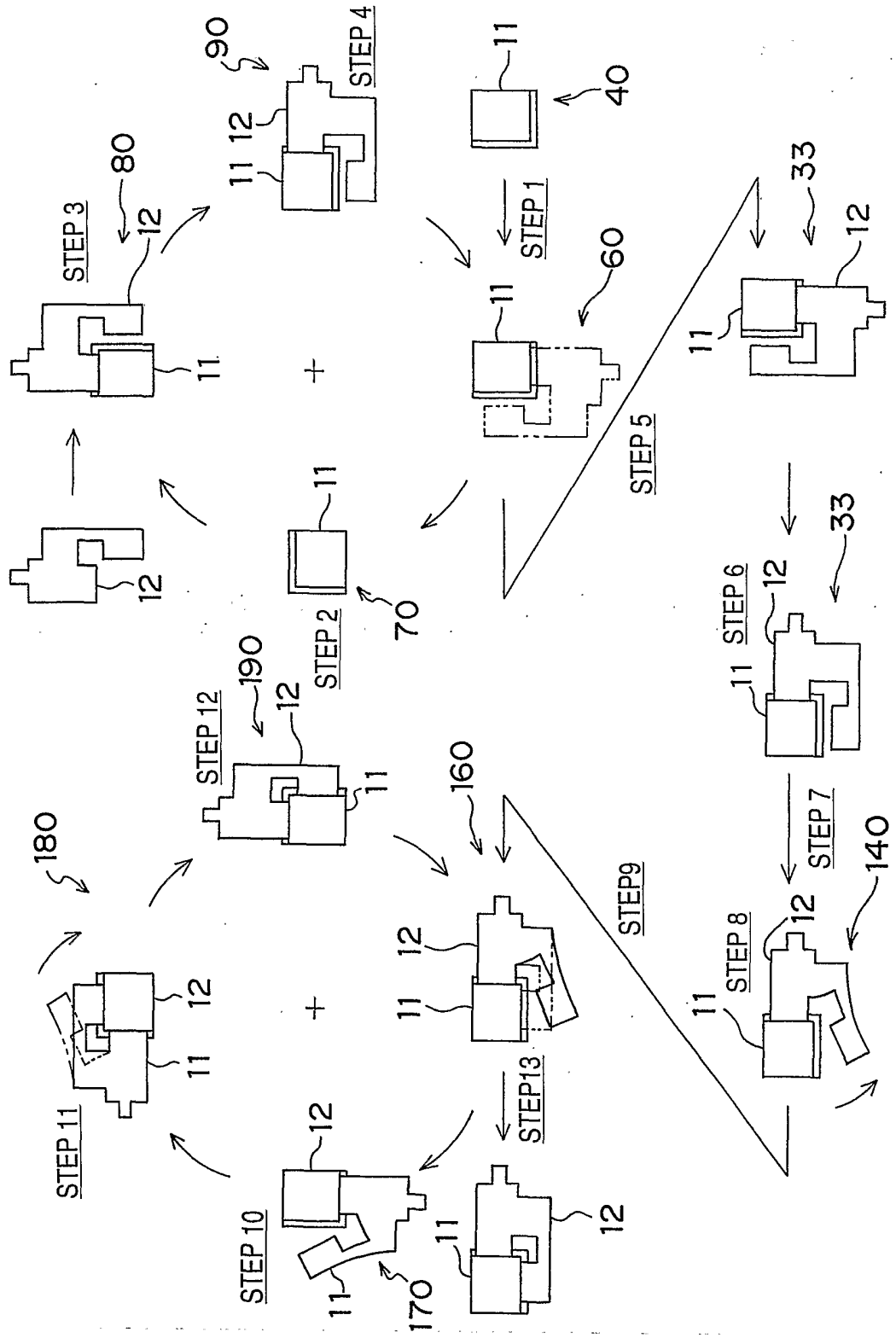
STEP 1
STEP 2
STEP 3
STEP 4
STEP 5
STEP 6
STEP 7
STEP 8
STEP9
STEP 10
STEP 11
STEP 12
STEP13
11
12
33
40
60
70
80
90
140
160
170
180
190

Fig.20

Fig.21A

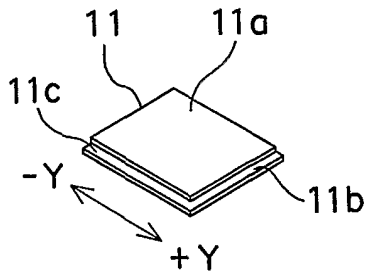

Fig.21B

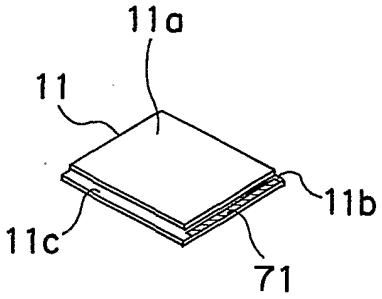

Fig.21C

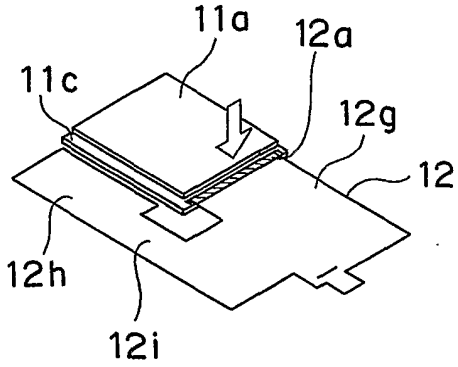

Fig.21D

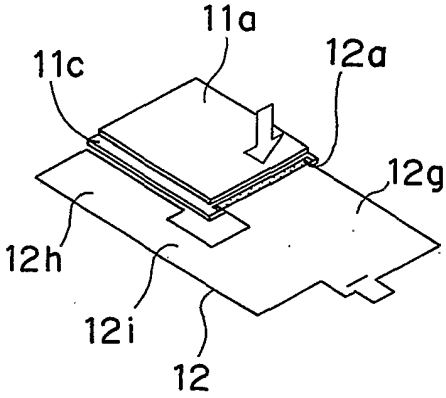

Fig.22A

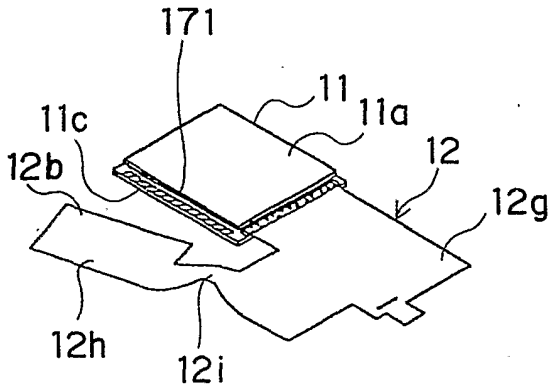

Fig.22B

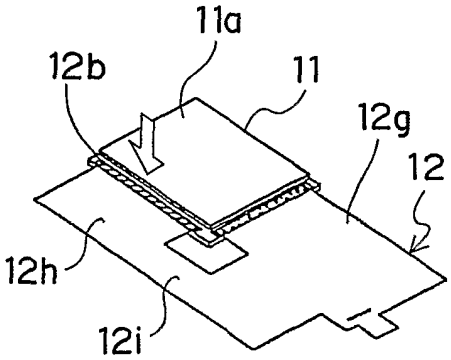

Fig.22C

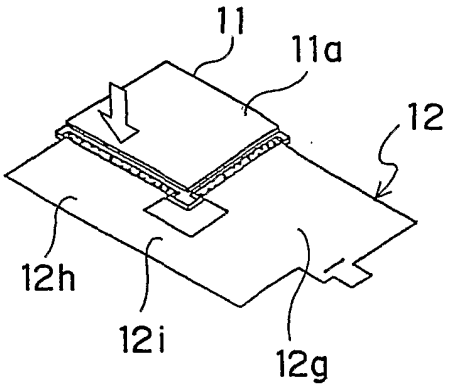

Fig.22D

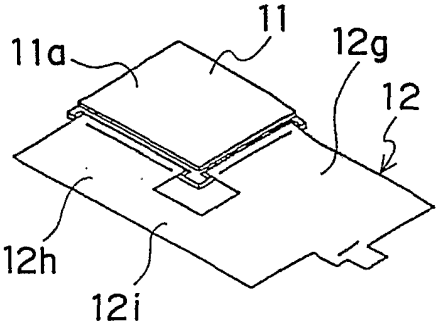

Fig.23A

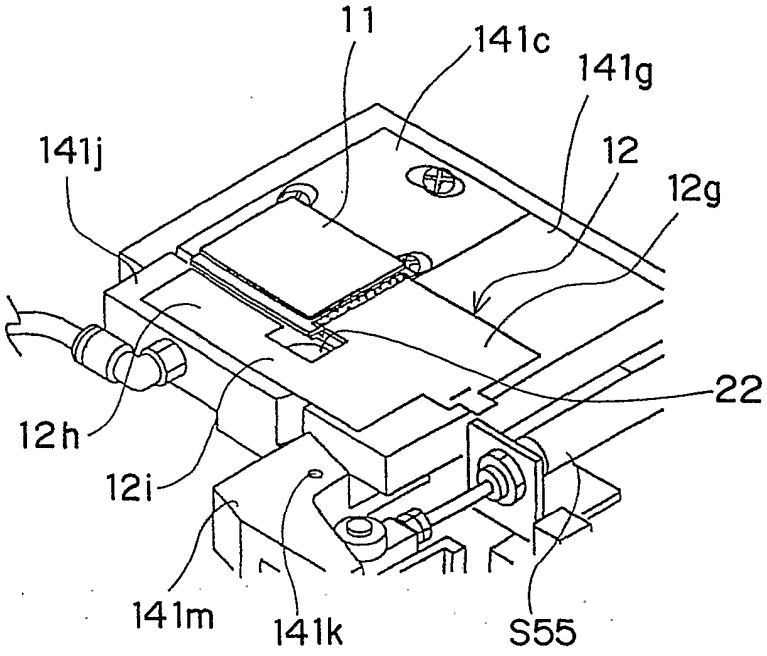

Fig.23B

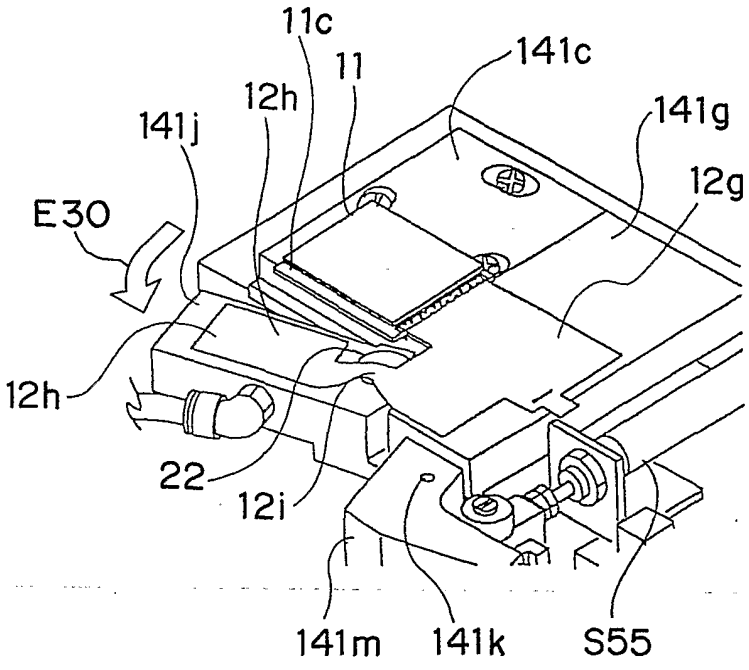

Fig.24A

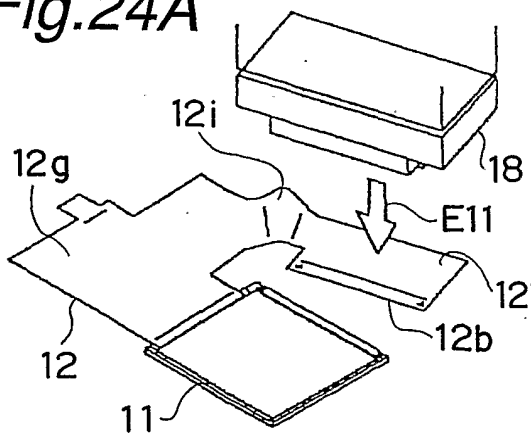

Fig.24B

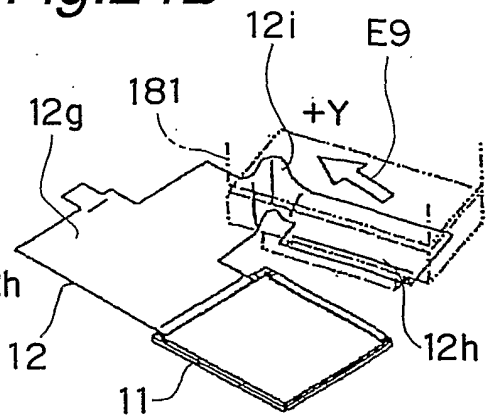

Fig.24C

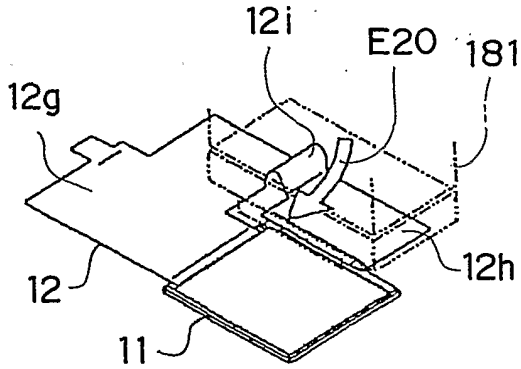

Fig.24D

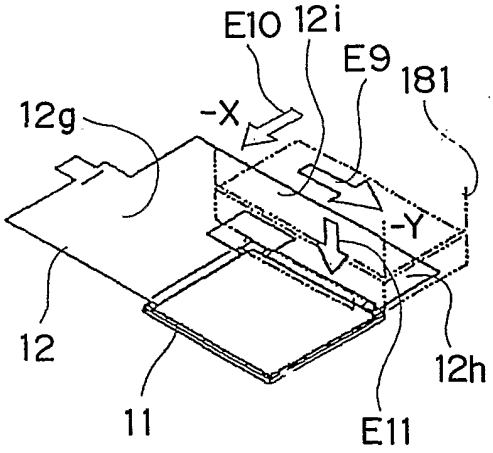

Fig.24E

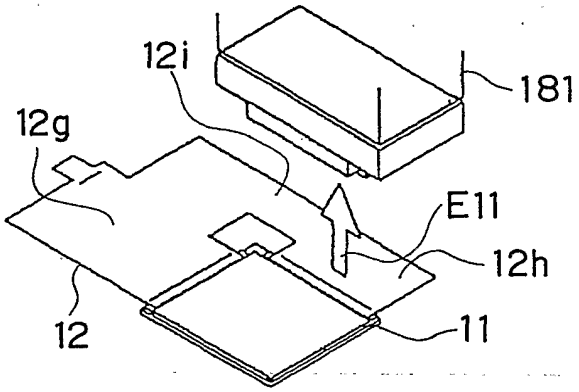

Fig.25

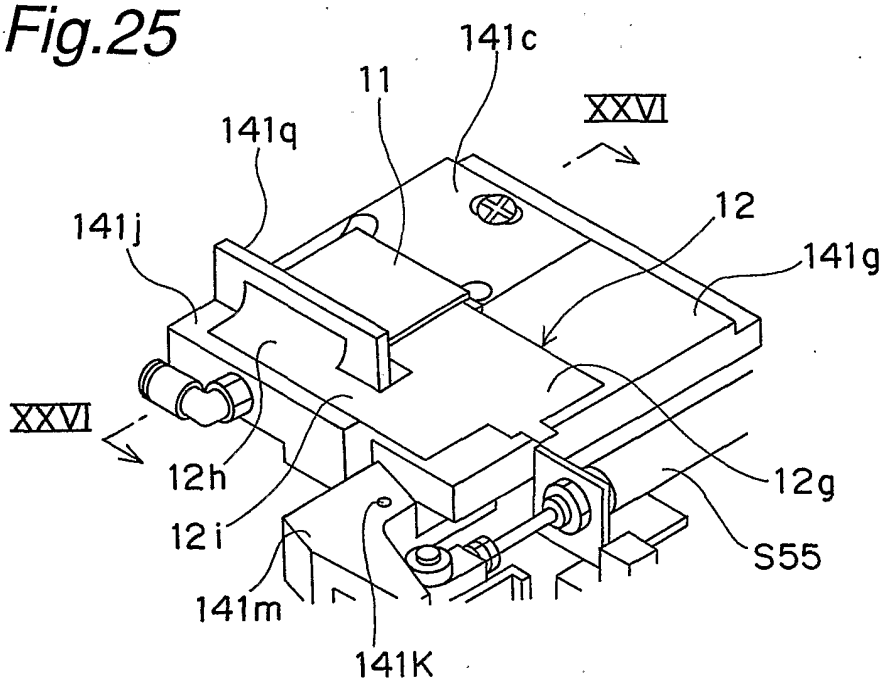
141c
11
XXVI
141q
12
141j
141g
XXVI
12h
12g
12i
S55
141m
141K

Fig.26

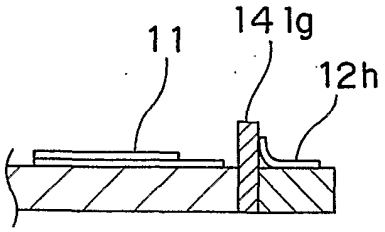
11
141g
12h

Fig.27

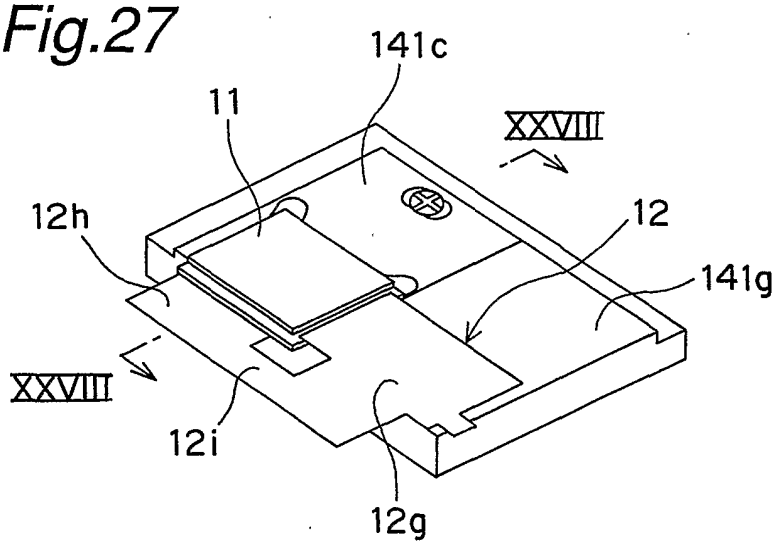

Fig.28

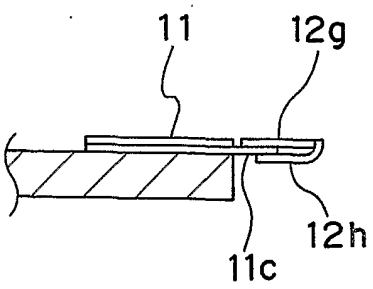

Fig.29

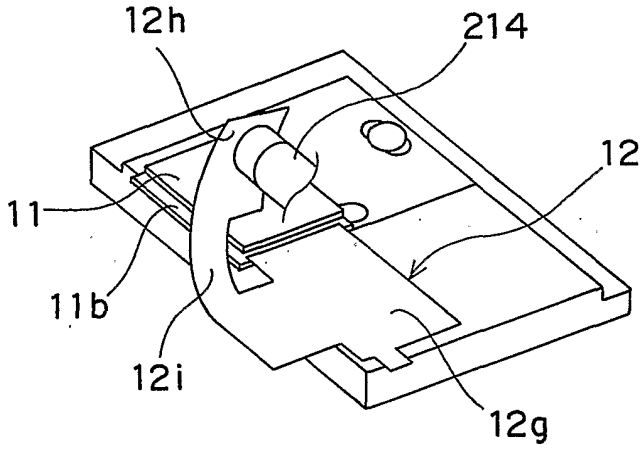

Fig.30A PRIOR ART

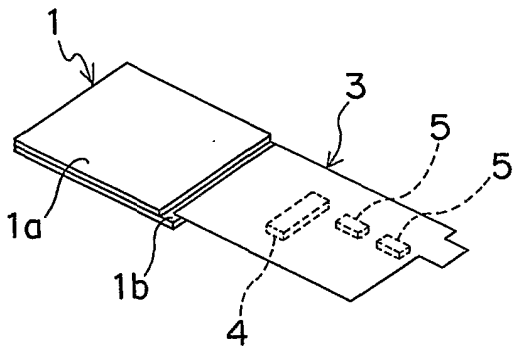

Fig.30B PRIOR ART

