A. REUBENSTONE.

ATTACHMENT FOR TELEPHONES.

APPLICATION FILED MAR. 20, 1917.

1,287,099.

Patented Dec. 10, 1918.

2 SHEETS—SHEET 1.

FIG. 1.

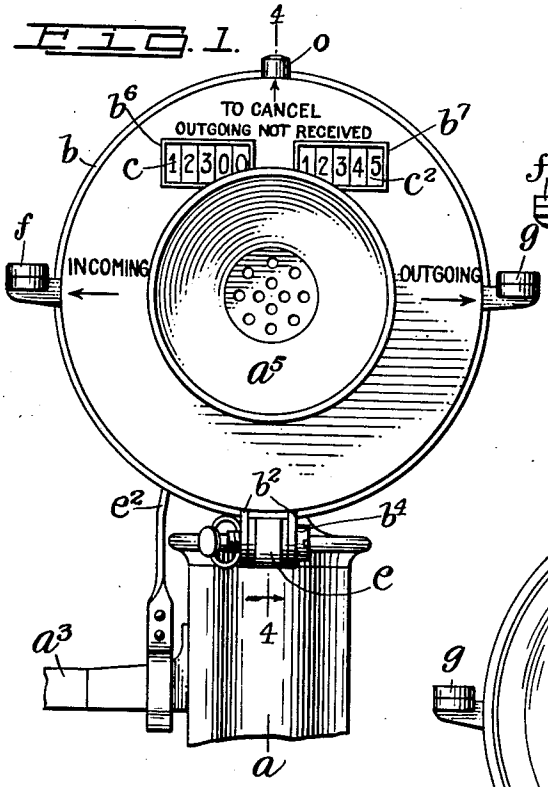

FIG. 8.

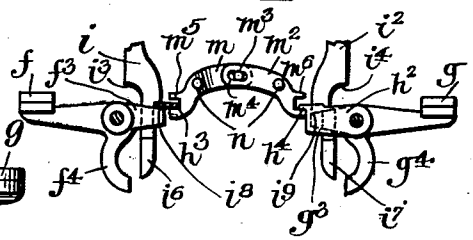

FIG. 2.

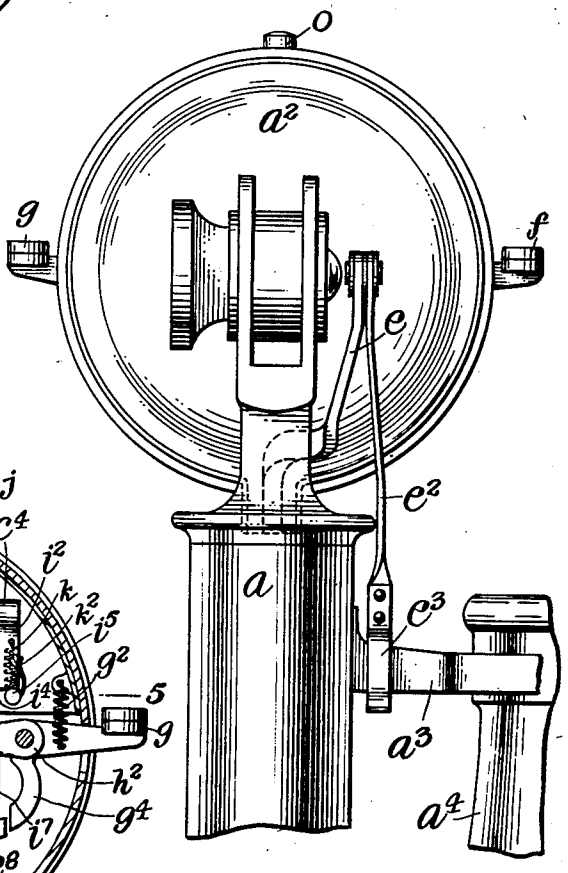

FIG. 3.

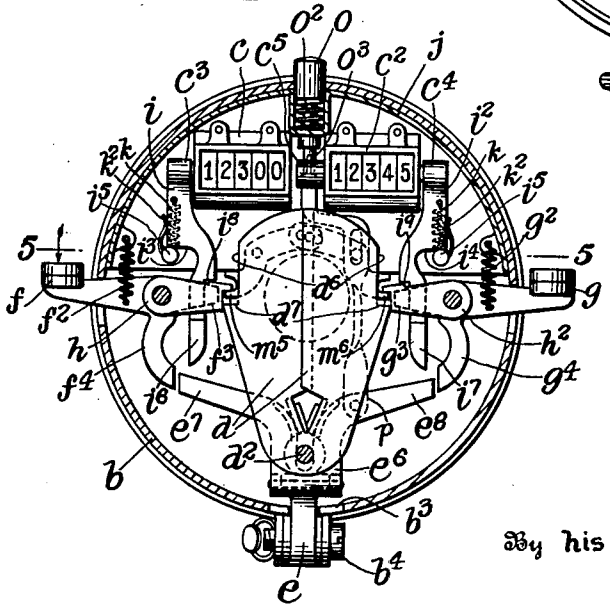

Inventor

Abraham Reubenstone,

By his Attorneys

Edgar Tate & Co.

A. REUBENSTONE.

ATTACHMENT FOR TELEPHONES.

APPLICATION FILED MAR. 20, 1917.

1,287,099.

Patented Dec. 10, 1918.

2 SHEETS—SHEET 2.

FIG. 4.

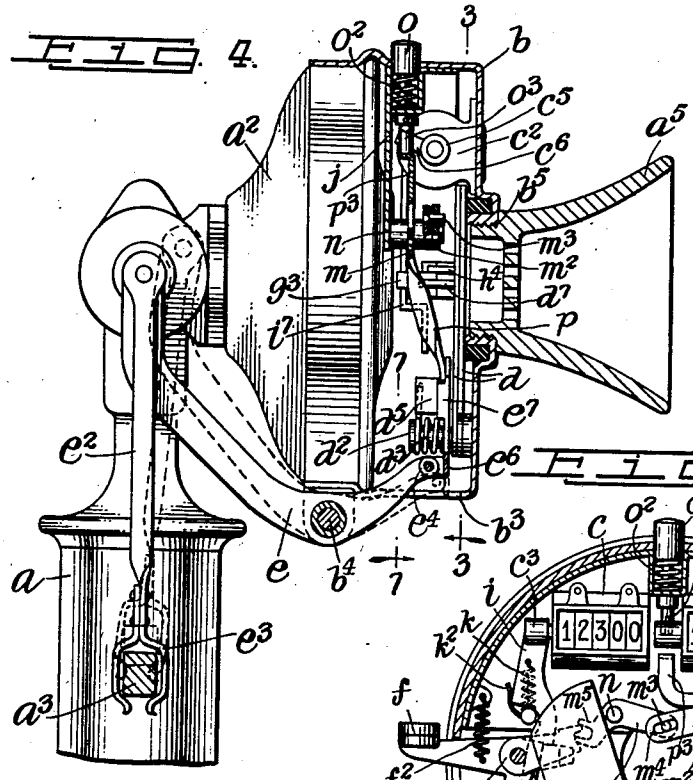

FIG. 6.

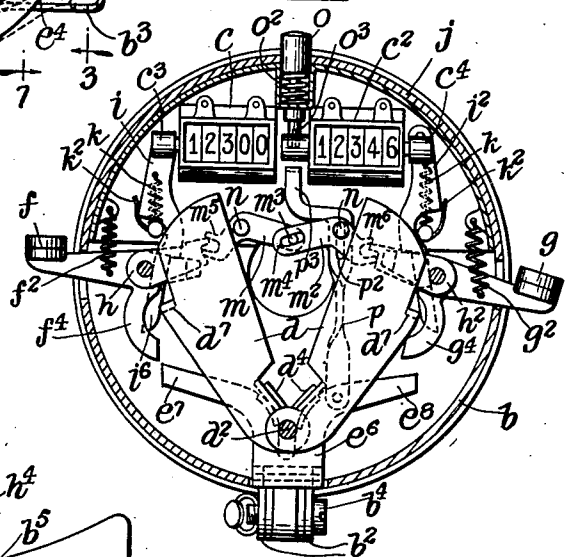

FIG. 5.

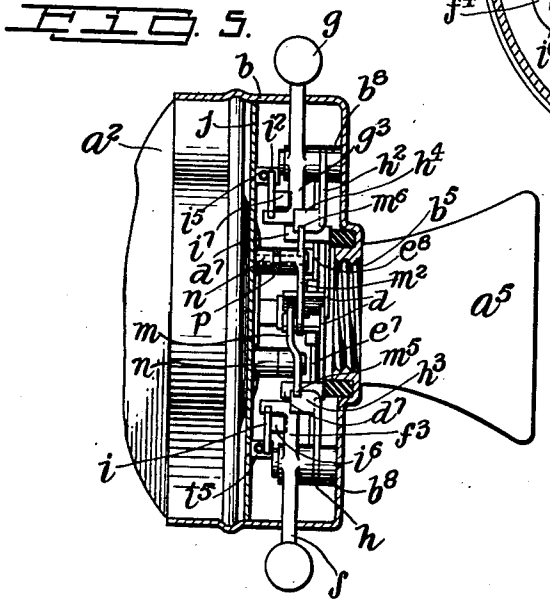

FIG. 7.

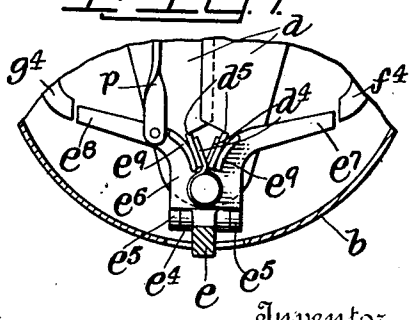

Inventor

Abraham Reubenstone.

By his Attorneys

Edgar Tate & Co.

UNITED STATES PATENT OFFICE.

ABRAHAM REUBENSTONE, OF NEW YORK, N. Y.

ATTACHMENT FOR TELEPHONES.

1,287,099. Specification of Letters Patent. Patented Dec. 10, 1918.

Application filed March 20, 1917. Serial No. 155,975.

To all whom it may concern:

Be it known that I, ABRAHAM REUBENSTONE, a citizen of the United States, and residing at New York, in the county of New York and State of New York, have invented certain new and useful Improvements in Attachments for Telephones, of which the following is a specification, such as will enable those skilled in the art to which it appertains to make and use the same.

This invention relates to attachments for telephones, and the object thereof is to provide an improved device of this class which is designed to prevent overcharges, mischarges, and fraudulent charges by the company, and to keep a true and accurate account of all calls for which the user of the telephone is liable, and which is also designed to be attached to and used in connection with the transmitter of the telephone, and which forms a part thereof when in use; a further object being to provide an attachment for telephones which will register all outgoing calls made by the owner or user of the telephone, and which will cancel all outgoing calls not received by the party or parties on whom they are made, and which will also register all incoming calls or calls received by the owner or user of the telephone and which controls the operation of the transmitter and must be operated for the purpose of registering outgoing and incoming calls when the transmitter is used and before using the transmitter for making or receiving calls; a still further object being to provide an attachment for telephones of the class specified in which the registering mechanism is controlled by the receiver arm of the telephone; and with these and other objects in view the invention consists in an attachment for telephones of the class specified, constructed and operating as hereinafter described and claimed.

The invention is fully disclosed in the following specification, of which the accompanying drawings form a part, in which the separate parts of my improvement are designated by suitable reference characters in each of the views, and in which:

Figure 1 is a front view of the transmitter portion of a telephone but showing my invention attached thereto;

Fig. 2 a back view of the construction shown in Fig. 1 and indicating the receiver arm and the receiver suspended therefrom;

Fig. 3 a partial section on the line 3—3 of Fig. 4 and showing the operative mechanism of my improvement;

Fig. 4 a partial section on the line 4—4 of Fig. 1;

Fig. 5 a partial section on the line 5—5 of Fig. 3;

Fig. 6 a view similar to Fig. 3 but showing parts of the operative mechanism in a different position from that shown in Fig. 3;

Fig. 7 a partial section on the line 7—7 of Fig. 4; and

Fig. 8 a detail view of a part of the operative mechanism which I employ.

In the drawing and especially Figs. 1, 2 and 4, I have shown at a a telephone standard of the usual or any desired form to the top of which is pivoted the usual transmitter a^2, and pivotally mounted in one side of the standard a is a receiver arm a^3 from which is suspended a receiver a^4. The transmitter a^2 is provided with the usual mouthpiece a^5 which, in my improvement, is preferably secured in the front portion of a casing b as hereinafter described.

The casing b is cup-shaped in form and is adapted to be passed over the transmitter a^2 and secured thereto by compressing two ears b^2 bent from the material of said casing on the opposite sides of a slotted portion b^3 in the bottom of said casing, said ears being compressed by a bolt or screw b^4 passed therethrough as clearly indicated in Figs. 3 and 6. The central front portion of the casing b^2 is provided with a threaded aperture b^5 in which the mouth-piece a^5 is mounted, and above and on the opposite sides of said aperture, the casing is provided with apertures or openings b^6 and b^7 rearwardly of which are mounted registering devices c and c^2, of any desired form and construction.

Mounted within the casing b and rearwardly of the aperture b^5 thereof are shutters d pivoted at d^2 to a pin or stud mounted in the casing and on the rear end of which is mounted a spring d^3, the ends d^4 of which are directed upwardly and are adapted to operate in connection with inwardly directed flaps d^5 integral with the shutters d, said spring serving to separate the shutters d, as hereinafter described. The top side portions of the shutters are cut out as shown at d^6 and at the lower end of said cut-out portions, the shutters are provided with back-

wardly directed fingers d^7, as clearly indicated in Figs. 4 and 5, and in dotted lines in Figs. 3 and 6.

A rocker arm e is pivotally mounted on a bolt or screw b^4 and between the ears b^2, and pivoted to the rear end of said arm is a link e^2, the lower end of which is provided with a fork-shaped end e^3 adapted to engage or receive the receiver arm a^3 of the telephone, as clearly indicated in Fig. 4. The front end of the lever e is provided with a cylindrical head e^4 pivoted in lugs e^5 connected with a lock plate e^6 having oppositely directed arms e^7 and e^8, and with central arc-shaped portions e^9 which operate in connection with the flaps d^5 on the shutters d and serve to hold the shutters in their closed position against the tension of the spring d^3, as hereinafter described.

The front of the casing b is provided on the opposite sides of the aperture b^5 therein with studs b^8 to which are pivotally connected push button devices f and g normally held in a raised position by springs f^2 and g^2. The inner ends of the push button devices f and g are provided respectively with L-shaped arms f^3 and g^3 and the central portions of said devices are provided with downwardly directed fingers f^4 and g^4 which operate in connection with the arms e^7 and e^8 as hereinafter described.

Pawls h and h^2 are pivoted to the studs b^8 outwardly of the push button devices f and g and are free to move on said pivot, and the inner ends thereof are provided with backwardly directed portions h^3 and h^4 respectively.

The shafts of the registering devices c and c^2 are provided with sleeves c^3 and c^4 to the rear ends of which are pivoted plates i and i^2 provided with central cut-out portions i^3 and i^4 adapted to bear on pins or studs i^5 secured to a supplemental inner casing j. The lower ends of the plates i and i^2 are provided with off-set portions i^6 and i^7 between which and the cut-out portions i^3 and i^4 said plates are provided with shoulders i^8 and i^9.

The L-shaped arms f^3 and g^3 are adapted to operate in connection with the shoulders i^8 and i^9 of the plates i and i^2 to raise said plates on the depression or downward movement of the push button devices against the tension of the springs k connected with said plates and with the pins or studs i^5. Said studs are also provided with flat springs k^2 which operate on the outer faces of the plates i and i^2 and serve to move said plates inwardly, as hereinafter described.

I also provide levers m and m^2 pivoted to pins n secured to the supplemental inner casing j, the inner end of the lever m being provided with a pin m^3 which operates in connection with an elongated slot m^4 in the corresponding end of the lever m^2. The outer ends of said levers are provided with U-shaped portions m^5 and m^6 in connection with which the inwardly directed portions h^3 and h^4 of the pawls h and h^2 operate. By means of this construction the operation of one push button to open the shutters d is facilitated as hereinafter described.

The registering devices c^2, or the shaft thereof, in the construction shown, is also provided with a supplemental sleeve c^5 similar to the sleeves c^3 and c^4, and a push button device o is mounted in the central top portion of the casing b, and in the supplemental casing j, and normally projected by a spring o^2. The lower end of the push button device is provided with a finger o^3 which operates in connection with the sleeve c^5, or a projection c^6 thereon whereby, on the inward or downward movement of said push button device the registering device c^2 will be operated to cancel a call previously registered as hereinafter described.

The locking link p is connected with the arm e^8 of the lock plate e^6 and extends upwardly and has a bearing on one of the pins n, said pin passing through an elongated slot p^2 therein, and the upper end of the link p is provided with an L-shaped portion p^3 which operates in connection with the finger o^3 to lock the push button device against downward movement when the parts are in their normal position, or in the position shown in Figs. 1 to 5 inclusive. The link p in conjunction with the arms e^7 and e^8 operate as lock devices or devices for locking the push button devices f, g, and o against movement until the receiver a^4 has been removed from the arm a^3 as hereinafter described.

The operation of my improved registering mechanism will be readily understood by all those skilled in the art when taken in connection with the foregoing specification and the accompanying drawings and the following statement.

Presuming the parts to be in their normal position, or the position shown in Figs. 1 to 5 inclusive, and it be desired to use the telephone or call a predetermined number, the receiver a^4 is first removed from the receiver arm a^3 in which operation said arm moves upwardly in the usual manner and also moves the link e^2 upwardly to move the lever e from the position shown in full lines to the position indicated in dotted lines, which operation moves the lock plate e^6 and the arms e^7 and e^8 thereof downwardly into the position shown in Fig. 6, and at this point the shutters d are held against outward movement by the inner faces of the pawls h and h^2, as clearly indicated in Figs. 3 and 5, and by reason of the shutters d being closed it is impossible to use the tele-

phone, or to speak through the transmitter so as to be heard by "central" until said shutters are separated or opened.

As indicated in Fig. 1, the face of the casing b is provided adjacent to the push button devices f and g with the lettering "incoming" and "outgoing" respectively and adjacent to the push button device o, the face of the casing is provided with the words "To cancel outgoing not received". In view of the fact that the party using the telephone is sending an outgoing call, the push button device g is forced downwardly by hand into the position shown in Fig. 6, which operation releases the pawls h and h^2 from the shutters d, and the spring d^3 moves said shutters into the position shown in Fig. 6, or to their open position. The pawls are moved upwardly to accomplish the above result by the L-shaped arm g^3 raising the pawl h^2 in which operation the lever m^2, or the U-shaped end m^6 thereof is raised and the corresponding U-shaped end m^5 of the lever m is raised by reason of the connection of said levers at m^3 and m^4, and the lever m^2 raises the pawl h at the same time as the pawl h^2 is moved upwardly, as will be readily understood.

In the above described downward movement of the push button device g, the plate i^2 is moved upwardly by the arm g^3 to operate the registering device c^2 as indicated in Fig. 6 and register another call, and in the movement of the shutters d from their closed to their open position the plates i and i^2 swing outwardly into the position shown in Fig. 6 by reason of the backwardly directed fingers d^7 engaging the offset portions i^6 and i^7 of said plates. The plates i and i^2 are held in this position by the shutters d until said shutters are returned to their normal or closed position, and it will be noted that in the position of the parts shown in Fig. 6, the push button device g will be returned to its normal position by the spring g^2 and the same may be manipulated freely without danger of registering a call by reason of the fact that the plate i^2 is held out of engagement therewith.

After the call has been completed and the receiver a^4 is placed on the arm a^3, and said arm moved downwardly in the usual manner, this last operation of the arm returns the lever e from its dotted line position to the full line position and moves the lock plate e^6 pivoted to the front end thereof upwardly, which operation moves the shutters d inwardly to close the same, and the pawls h and h^2 drop into position to lock said shutters in their closed position, and the plates i and i^2 are moved inwardly by the springs k^2 or, in short, the parts d, g, i, i^2, h, h^2, m, m^2 and p are returned into the position shown in Figs. 1 to 5 inclusive, or their normal position.

Should the party making the above call not have received the desired number, said call may be canceled by moving the push button o inwardly to operate the registering device c^2 to cancel a call, or the call previously registered by the upward movement of the plate i^2. This operation of the push button o may be performed before placing the receiver a^4 on the arm a^3, but if the party should forget to cancel a call before placing the receiver on the receiver arm, the receiver may be again removed from the arm and the button o manipulated without interfering with the other mechanism in any way, it being essential to remove the receiver arm in order to withdraw the locking link p from the finger o^3 of the push button o.

On receiving a call the above operation of sending a call will be followed precisely with the exception that the push button device f is manipulated instead of the push button device g, but the operation of the mechanism will be in all respects the same as will be readily understood on a consideration of Figs. 3, 5 and 6 of the drawing.

From the foregoing description, it will be noted that the push button devices f, g, and o are normally locked against movement, and in this way it is impossible to register or to operate the registering devices c and c^2 without raising, or removing the receiver a^4 from the arm a^3, as hereinbefore set out, and it is also impossible to register a call whether incoming or outgoing on the devices c and c^2 when the parts of my improved mechanism are in the position shown in Fig. 6 with either of the push button devices f—g in the depressed position.

It will also be seen that my improved attachment for telephones forms, when in use, a part of the transmitter and controls the operation of the transmitter and must be operated for the purpose of registering outgoing and incoming calls when the transmitter is used and before using the transmitter for making or receiving calls and the word "controls" as used in the appended claims means that the registering device must be operated before outgoing calls can be made or incoming calls received, and that the shutters d actually control the operation of the transmitter by opening and closing the same; and while I have shown and described my call registering device for use in connection with the transmitter of a telephone, and also for use in connection with the receiver arm, in the construction shown and described, the receiver arm normally serves to hold the shutters in a closed position, but my invention is not limited to the use of the receiver arm, or the connection of said arm with the operative parts of the attachment or registering device for this purpose, and while I have shown and described the construction which I prefer at

this time in order to carry my improvement into effect, it will be understood that my invention is not limited to the details of construction herein shown and described, and various changes therein and modifications thereof may be made, within the scope of the appended claims without departing from the spirit of the invention or sacrificing its advantages.

Having fully described my invention, what I claim as new and desire to secure by Letters Patent, is:—

1. The combination with the transmitter of a telephone, of means for normally closing said transmitter, means for opening said closing means, a registering device, and means in operative connection with said closing means and said registering device for releasing the closing means and operating said registering device.

2. The combination with the transmitter of a telephone, of means for normally closing said transmitter, means including a push button for opening said closing means, and a registering device in operative connection with and adapted to be operated by the push button for registering a call each time the push button is operated.

3. An attachment for telephones adapted to be connected with and to operate in connection with the transmitter of the telephone and comprising a casing adapted to be connected with the transmitter and having an aperture, shutter devices mounted therein rearwardly of said aperture, and call registering means mounted therein, said casing being also provided with a push button device, and means for placing said shutter devices and registering means in operative connection with said push button device, whereby the operation of said push button device will operate said shutter devices and said registering means.

4. The combination with the transmitter of a telephone, of shutters for normally closing said transmitter, means for opening and closing said shutters, means in operative connection with said shutters for releasing the same to permit the opening thereof, and a registering device operated by said releasing means for registering a call each time the releasing means is operated.

5. An attachment for telephones adapted to be connected with and to operate in connection with both the transmitter and the receiver arm and comprising a casing adapted to be connected with the transmitter and provided with an aperture, shutter devices mounted in said casing rearwardly of said aperture, call registering means mounted in said casing, a push button device mounted in said casing, means for placing said shutter devices and said registering means in operative connection with the push button device whereby the operation of said push button device will operate said shutter and said registering means, and lock devices mounted in said casing and connected with the receiver arm of the telephone for locking said shutter devices and push button device against movement when the receiver arm is supporting the receiver.

6. The combination with a telephone, of means for normally closing the transmitter, means controlled by the receiver arm of the telephone for locking said closing means when the receiver arm is supporting the receiver and for unlocking the closing means when the receiver is removed from the receiver arm, means in operative connection with and adapted to release and open said closing means, and a registering device operated by said opening means for registering a call each time the releasing means is operated.

7. An attachment for use in connection with telephones and designed to be connected with and to operate in connection with both the transmitter and the receiver arm, said attachment comprising a casing adapted to be connected with the transmitter and provided with an aperture, shutters mounted in said casing rearwardly of said aperture and adapted to close the same, means connected with the receiver arm and in operative connection with said shutters for locking said shutters in closed position when the receiver arm is supporting the receiver and for unlocking the shutters when the receiver is removed from the receiver arm, means in operative connection with and adapted to release and open said shutters, and a registering device operated by said releasing means for registering a call each time the releasing means is operated.

8. The combination with the transmitter of a telephone, of shutters pivotally mounted forward of said transmitter, a spring for opening said shutters, pawls for holding said shutters in closed position, means connecting said pawls for joint movement, a push button for operating said pawls to permit the shutters to open, and a registering device operated by said push button for registering a call each time the push button is operated to open said shutters.

9. The combination with the transmitter of a telephone, of shutters normally closing said transmitter, means in operative connection with and adapted to open said shutters, a push button, pawls normally retaining said shutters in closed position, means connecting said pawls for joint movement, said push button being in operative connection with one of said pawls for permitting the pawls to release the shutters when the push button is operated, and a registering device operated by said push button for registering a call each time said shutters are opened.

10. An attachment for telephones which

is in operative connection with the receiver arm and which controls the use of the transmitter, said attachment being provided with shutters adapted to open and close the transmitter, means in operative connection with the receiver arm for controlling the opening and closing of the shutters, devices for releasing said shutters, and a registering device in operative connection with and adapted to be operated by one of said shutter releasing devices.

11. An attachment for telephones comprising a casing located in front of the transmitter and having an opening arranged in axial alinement with the opening of the transmitter, shutters pivotally mounted in said casing for normally closing the opening in the same, mean for opening said shutters, pawls mounted in said casing and normally bearing on said shutters to prevent the same from opening, means connecting said pawls for joint movement, a push button in operative connection with one of said pawls and adapted to operate the same, and a registering device in operative connection with said push button and adapted to be operated by the same for registering a call each time the push button is operated.

12. An attachment for telephones comprising a casing located in front of the transmitter of the telephone and having an opening arranged in axial alinement with the opening of the transmitter, shutters pivotally mounted in said casing and normally closing the opening in the same, a spring for opening said shutters, pawls pivotally mounted in said casing and normally engaging said shutters to maintain the same in closed position, means connecting said pawls for joint movement, an extension provided on one of said pawls, a push button engaging said extension for operating said pawls to permit said shutters to open, and a registering device in operative connection with said push button and adapted to be operated thereby each time said push button is operated to open said shutters.

13. An attachment for telephones adapted to be connected with and to operate in connection with the transmitter and forming part thereof when in use, comprising a casing adapted to be secured in the transmitter between the body thereof and the mouthpiece and provided with an aperture, shutter devices mounted in said casing rearwardly of said aperture and adapted to open and close the same, means in operative connection with and adapted to release said shutters, and a call registering device in operative connection with said releasing means and adapted to register a call each time the releasing means is operated.

14. An attachment for telephones adapted to be connected with and to operate in connection with the transmitter and the receiver arm and controlling the use of the transmitter, comprising a casing adapted to be secured in connection with the transmitter and provided with an aperture which corresponds with the aperture through the transmitter, shutter devices mounted in said casing rearwardly of said aperture and adapted to open and close the same, call registering means mounted in said casing, means for operating said call registering means, means for opening said shutters in the operation of the call registering means, and means operating in connection with the receiver arm for locking the shutters against movement in the inoperative position of the receiver arm.

15. An attachment for telephones comprising a casing located in front of the telephone transmitter and having an opening in axial alinement with the opening of the transmitter, shutters pivotally mounted in said casing and normally closing the opening in the same, spring means for opening said shutters, locking means for said shutters in operative connection with the receiver arm of the telephone and adapted to unlock the shutters when the receiver is removed from the receiver arm, an arm carried by said locking means, pawls pivotally mounted in the casing and normally engaging the shutters to prevent the same from opening, means connecting said pawls for joint movement, a push button in operative connection with one of said pawls for operating said pawls to permit said shutters to open, an arm carried by said push button and adapted to contact with the arm of the locking means when the receiver is supported by the receiver arm to prevent movement of the push button, and a registering device in operative connection with said push button and adapted to register a call each time the push button is operated.

16. An attachment for telephones which controls the use of the transmitter, said attachment being provided with an aperture which corresponds with the aperture of the transmitter, shutters adapted to open and close said aperture, a call registering device, means for operating said registering device, and means in operative connection with said last named means for operating the shutters when the registering device is operated.

17. An attachment for telephones which controls the use of the transmitter, said attachment being provided with shutters to open and close the transmitter, said shutters being normally closed, means for registering calls and means connecting said shutters and call registering means, whereby a call is registered each time the shutters are opened.

18. An attachment for use in connection with telephones and designed to be connected with and to operate in connection with both the transmitter and the receiver

arm, said attachment comprising a casing adapted to be connected with the transmitter, shutter devices mounted in said casing and adapted to open and close the same, said shutter devices being normally held in a closed position, a call registering device mounted in said casing, means mounted in said casing for operating said registering device, means for opening said shutters in the operation of said registering device, and lock devices mounted in said casing and adapted to be connected with the receiver arm of the telephone whereby said shutter devices may be locked against movement in their closed position in the inoperative position of said receiver arm.

19. An attachment for telephones which controls the use of the transmitter, said attachment being provided with shutters to open and close said transmitter, said shutters being normally closed, means for holding said shutters in their closed position, means for releasing the holding means to permit the shutters to open, means for opening said shutters when said last named means is operated, and means in operative connection with the holding means for registering calls when the shutters are open.

20. The combination with the transmitter of a telephone, of an apparatus which normally renders the transmitter inoperative and which involves a registering device, and means for rendering the transmitter operative, and for actuating the registering device.

In testimony that I claim the foregoing as my invention I have signed my name in presence of the subscribing witnesses this 16th day of March, 1917.

ABRAHAM REUBENSTONE.

Witnesses:
C. E. MULREAMY,
H. E. THOMPSON.