M. E. BROWN.

WASHBOARD.

APPLICATION FILED MAY 18, 1908.

916,263. Patented Mar. 23, 1909.

FIG. 1.

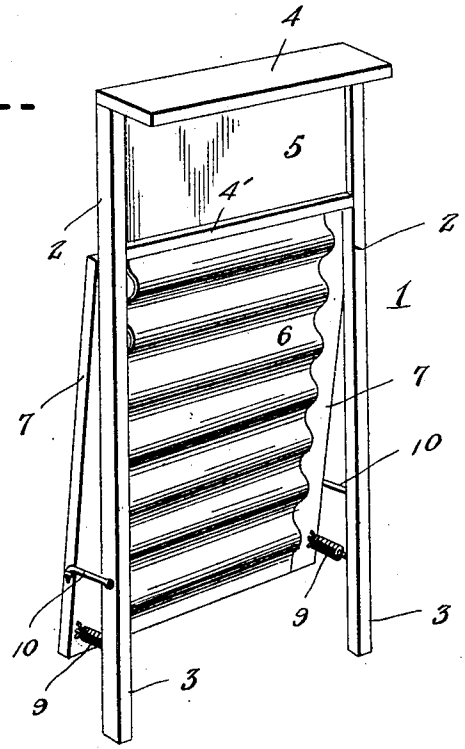

FIG. 2.

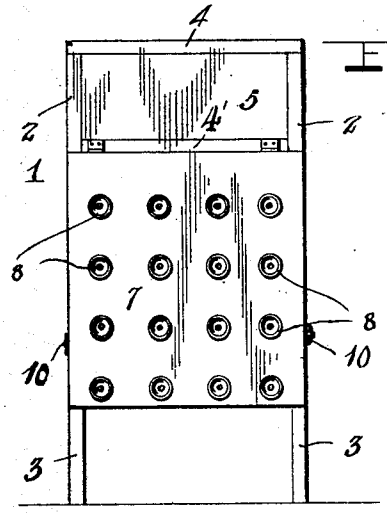

FIG. 3.

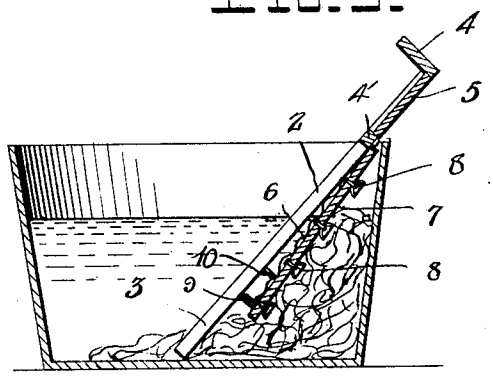

Witnesses

Chas. L. Griesbauer.

C. H. Griesbauer.

Inventor

Mary Etta Brown.

By H. B. Williamson & Co.

Attorneys

THE NORRIS PETERS CO., WASHINGTON, D. C.

UNITED STATES PATENT OFFICE.

MARY ETTA BROWN, OF CAVALIER, NORTH DAKOTA.

WASHBOARD.

No. 916,263. Specification of Letters Patent. Patented March 23, 1909.

Application filed May 18, 1908. Serial No. 433,524.

To all whom it may concern:

Be it known that I, MARY ETTA BROWN, a citizen of the United States, residing at Cavalier, in the county of Pembina and State of North Dakota, have invented certain new and useful Improvements in Washboards; and I do declare the following to be a full, clear, and exact description of the invention, such as will enable others skilled in the art to which it appertains to make and use the same.

This invention relates to improvements in wash-boards.

The object of the invention is to provide a wash-board which, when in use, will act as a pounder on the clothes in the tub, this will keep the suds agitated and force the same back and forth through the clothes, thereby greatly facilitating the cleansing of the same.

With this and other objects in view the invention consists of certain novel features of construction, combination and arrangement of parts as will be described and particularly pointed out in the appended claims.

In the accompanying drawing, Figure 1 is a perspective view of a wash-board constructed in accordance with the invention; Fig. 2 is a rear view of the same; and Fig. 3 is a vertical sectional view of a wash-board and tub showing the manner in which the board is used.

Referring more particularly to the drawings, 1 denotes the board, consisting of longitudinally disposed side bars, 2, the lower ends of which are extended below the board to form supporting legs, 3. The upper ends of the side bars are connected by cross bars, 4 and 4′, between which is arranged the back piece, 5.

To the lower cross piece, 4′, is hingedly connected the upper end of a scrubbing board consisting of a rubbing plate, 6, which is provided with corrugations or any suitable form of roughened surface, and is secured to a backing board, 7, on the rear side of which is secured a number of clothes pounding devices, 8, which are here shown as cups, but which may be constructed in any suitable shape to provide suction devices which, when engaged with the clothes in the tub, will serve to force the water and suds back and forth through the clothes, and will keep the suds in the tub agitated or in motion. The lower end of the scrubbing board is connected to the side bars, 2, by means of suitable springs, 9, which will permit the lower portion of the board to be forced downwardly when the clothes are rubbed thereon and which will retract the board when pressure is removed therefrom. By thus hingedly connecting the upper end of the scrubbing board and connecting its lower end to the side bars by means of the springs, 9, said board will be moved up and down or swung back and forth in the tub against the clothes during the scrubbing operation, which will engage the pounding devices on the lower side thereof with the clothes in the tub beneath the board and will force the water back and forth through the same, thus loosening the dirt so that when these clothes are rubbed upon the board, the loosened dirt will be readily removed therefrom, thereby facilitating the cleaning of the clothes.

In order to fasten the lower end of the board against swinging movement while in use, I provide suitable fastening devices which are here shown in the form of hooks, 10, arranged on the side bars and adapted to be engaged with suitable eyes or connecting devices arranged on the edges of the rubbing board. When the board is thus secured to the side bars, the same may be used in the ordinary manner.

While I have shown and described the clothes pounding devices as being in the form of cups, it is obvious that said devices may be of any suitable form or construction to accomplish the purpose for which they are intended.

From the foregoing description, taken in connection with the accompanying drawing, the construction and operation of the invention will be readily understood without requiring a more extended explanation.

Various changes in the form, proportion and the minor details of construction may be resorted to without departing from the principle or sacrificing any of the advantages of the invention as defined in the appended claims.

Having thus described my invention, what I claim as new and desire to secure by Letters-Patent, is:

1. In a wash board, a supporting frame, a scrubbing board hingedly connected at its upper end to said frame, springs to yieldingly connect the lower end of the board to the frame, and clothes pounding devices arranged on the lower side of and operated by said scrubbing board.

2. In a wash board, a supporting frame, a

scrubbing board hingedly connected at its upper end to said frame, springs to yieldingly connect the lower end of the board on the frame, and clothes pounding devices arranged on the lower side of and operated by said scrubbing board, said pounding devices comprising suction cups secured in an inverted position on said scrubbing board.

In testimony whereof I have hereunto set my hand in presence of two subscribing witnesses.

MARY ETTA BROWN.

Witnesses:
PAUL E. HALLDORSON,
H. A. RYGH.