L. J. STICKLIN.

SPRAYER.

APPLICATION FILED JULY 29, 1915.

1,219,049.

Patented Mar. 13, 1917.

2 SHEETS—SHEET 1.

Fig. 1.

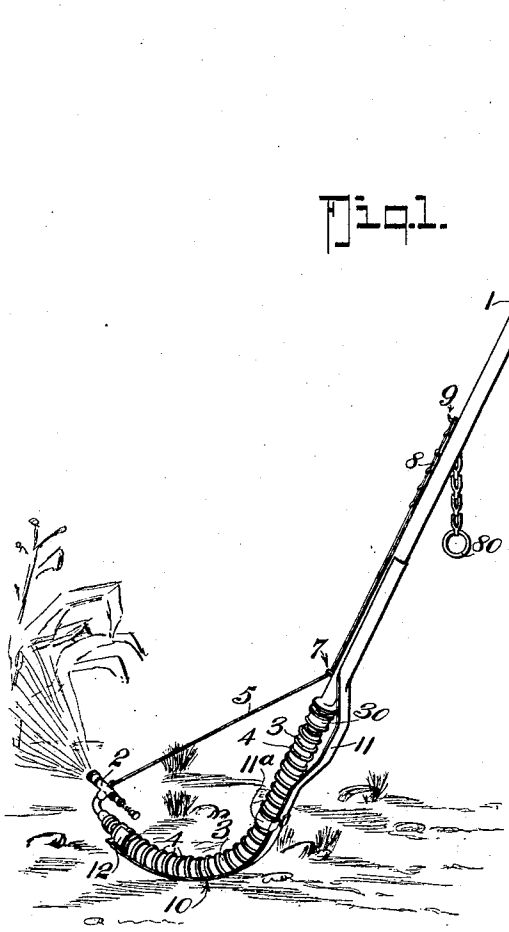

Fig. 5.

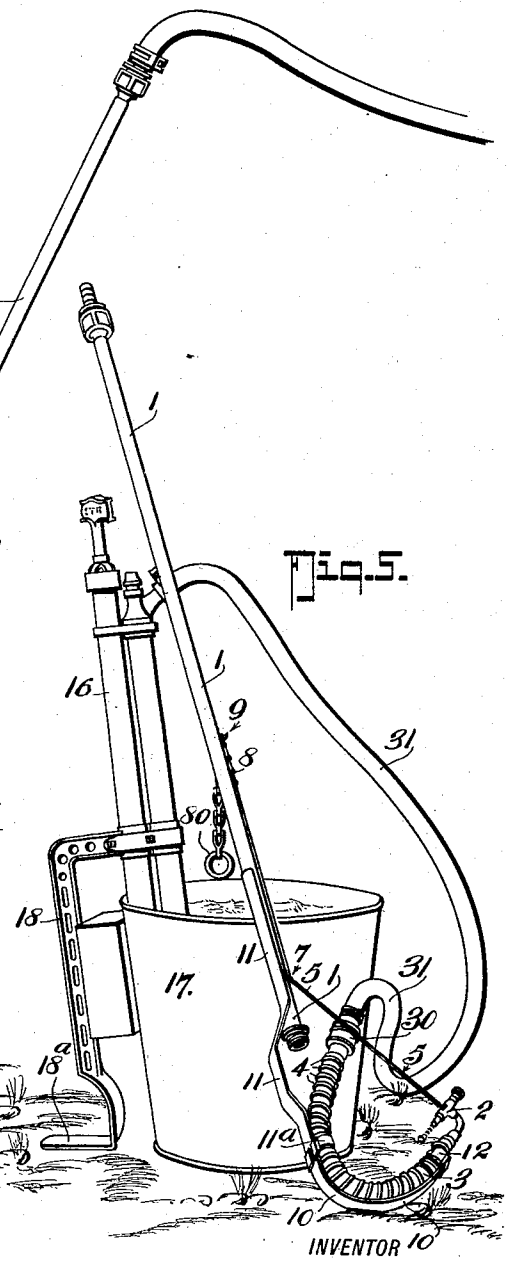

WITNESS

Charles J. Dillon.

INVENTOR

L. J. Sticklin

BY

Fred J. Dieterich & Co

ATTORNEYS

THE NORRIS PETERS CO. PHOTO-LITHO., WASHINGTON, D. C.

L. J. STICKLIN.

SPRAYER.

APPLICATION FILED JULY 29, 1915.

1,219,049.

Patented Mar. 13, 1917.

2 SHEETS—SHEET 2.

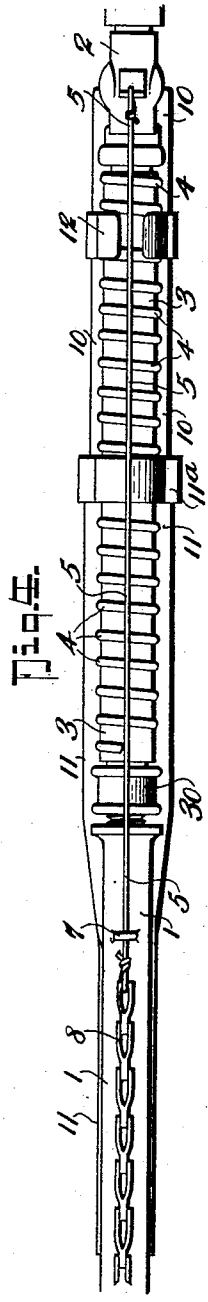

Fig. 1.

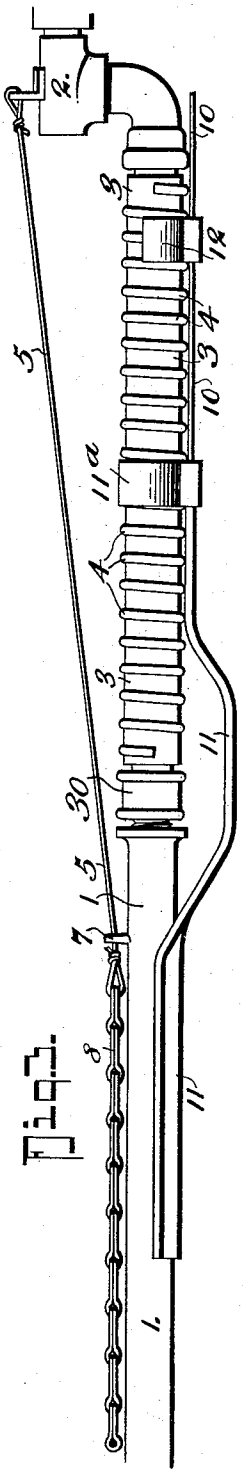

Fig. 3.

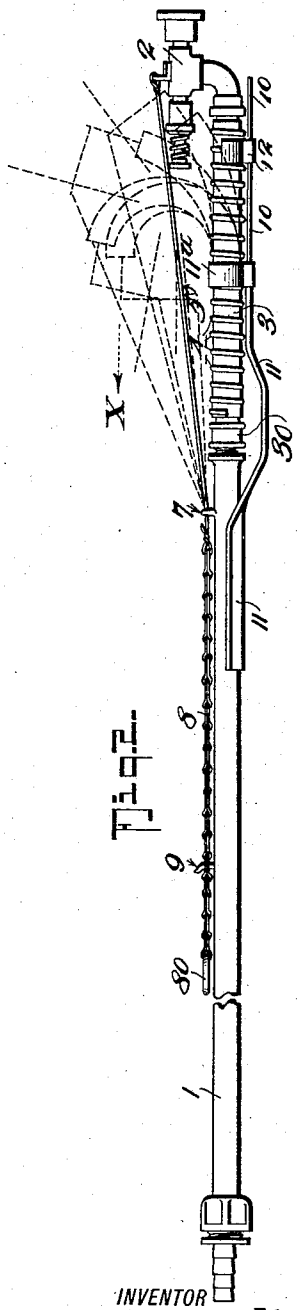

Fig. 2.

WITNESS

Charles J. Diller.

INVENTOR

L. J. Sticklin,

BY

Fred G. Dieterich & Co

ATTORNEYS

THE NORRIS PETERS CO., PHOTO-LITHO., WASHINGTON, D. C.

UNITED STATES PATENT OFFICE.

LOUIS J. STICKLIN, OF CHEHALIS, WASHINGTON.

SPRAYER.

1,219,049. Specification of Letters Patent. Patented Mar. 13, 1917.

Application filed July 29, 1915. Serial No. 42,606.

To all whom it may concern:

Be it known that I, LOUIS J. STICKLIN, residing at Chehalis, in the county of Lewis and State of Washington, have invented certain new and useful Improvements in Sprayers, of which the following is a specification.

My invention has reference to that class of portable spraying appliances that are more especially designed for spraying plants, shrubbery and such other objects for which such sprayers are generally employed, and it primarily has for its purpose to provide a spraying appliance of the character stated of a simple and inexpensive construction, in which the operative parts are designed for being readily connected with the house water pressure supply or with a hand pump, pressure tank, or other forced feed.

Among other objects, my invention has for its purpose, to provide an improved spraying appliance in which is included a feed pipe that forms a handle and which carries the spraying elements on one end thereof and whose other end is adapted for being connected with the fluid feed.

Another object of my invention is to provide, in a spraying device of the character stated, spraying elements that include a flexible hose connection, one end of which carries the spraying head; a handle in the nature of a metal feed tube to which the said hose connection is joined, and means carried by the said tube for flexing the tube connection to effect substantially universal adjustments of the sprayer head and for holding the said head or nozzle to its set positions.

With other objects in view that will hereinafter appear, my invention is an improved spraying appliance that embodies the peculiar features of construction, and arrangement of parts, all of which will be first fully described, then be specifically pointed out in the appended claims, and illustrated in the accompanying drawings, in which:—

Figure 1 is a perspective view of my improved spraying appliance, the spraying nozzle being shown as projected approximately at right angles to the combined feed tube and handle, the means for holding the nozzle to the bent up position being also shown.

Fig. 2 is a side elevation of the spraying device, the nozzle end being shown as bent up at four different positions, in dotted lines.

Fig. 3 is a side elevation of the sprayer on an enlarged scale, the parts being at the extended or normal position.

Fig. 4 is a top plan view of the parts shown in Fig. 3.

Fig. 5 is a perspective view that illustrates my sprayer devices as operatively coupled up with a portable force pump.

In the practical construction, my improved device consists essentially of a metal tube 1, which forms the handle for the operator when using the sprayer, a spraying head or nozzle 2, and a flexible connection in the nature of a hose section 3 that is mounted in a steel coil spring 4, and means including a flexible pull member 5, preferably piano wire, connected at one end to the spraying head 2, of any well-known construction.

The pull member 5 is guided in an eye 7 on the tube 1 and is connected to a pull chain 8 having a finger or pulling ring 80 which, and the adjacent links of the chain, may be readily slipped onto a hook 9, on the tube 1, for holding the sprayer to its several turned back positions, as shown in dotted lines on Fig. 2.

11 designates a stiffener plate that is secured to and projects from the outer end of the tube or handle member 1 and the outer end of the said plate 11 connects with a sleeve 11^a fixedly connected with the spring coil 5 that surrounds the hose section 3.

The spraying head or nozzle 2 which may be of any well-known construction, and the hose section 3 are normally held to their straightway or extended positions by a flat spring plate 10, slidable in a sleeve 12 secured to the coil spring and whose inner end extends into the clip 11^a and joins with the outer end of the stiffener plate 11.

By reason of the peculiar arrangement of the parts as described, when my spraying appliance is arranged as shown in Figs. 1 to 4, when operatively handled, the operator, by taking hold of the handle or tube 1, with

one hand, can readily direct the spraying head to the points desired and by grasping the pull ring 80 in the other hand, he can flex the hose section 3 to cause the sprayer head to eject the fluid in the desired directions.

The inner end of the hose connection 3 carries a coupling member 30 for joining with the pipe 1 or with a hose 31 when the sprayer head is coupled up with the force pump or a tank holding the spraying fluid under pressure.

When the sprayer head is used in connection with a hand pump, the same is preferably arranged in the manner shown in Fig. 5, by reference to which it will be seen that the tube 1, in the said arrangement serves only as a handle member, it being disconnected from the coupling 30, which latter is now coupled to the hose 31 that joins with the pump 16 mounted in a bucket 17, or other suitable fluid holding receptacle.

The pump 16 is supported in the bucket by a standard 18 which includes a foot piece 18^a for being engaged by the foot of the operator, as the said operator with one hand manipulates the handle 1 and the spraying devices carried on the outer end thereof, and works the pump with the other hand.

From the foregoing description taken in connection with the accompanying drawing, the complete construction, the manner in which my improved appliance may be manipulated and the advantages thereof will be readily understood.

By reason of using a tubular handle as stated an inexpensive means for operatively mounting the spraying elements is provided and for making a direct flexible hose connection with the water pressure supply as well as providing a convenient handle for manipulating the spraying head or nozzle when the fluid feeds through the tube or when the nozzle or head is fed through a flexible hose connection with a force pump or pressure tank as indicated in Fig. 5.

While I have not shown it, it is obvious that the flexible hose connection shown in Fig. 5 that joins with the force pump may be readily attached to a pressure tank containing the fluid and supported from the shoulder of the operator, it being understood that in that case, an ordinary control valve in the flexible tube is manipulated by the operator for opening up the feed from the tank to the spraying head or nozzle.

It should be stated that the flexible nozzle end, shown and described, does not apply to the exclusive use of spraying but to a solid stream as well, nor is the flexibility thereof confined only to a point at right angle since it may be reversed completely so as to send the spray or stream back parallel with the handle, as indicated by the dotted position X on Fig. 2.

What I claim is:

1. In a spraying appliance of the character described, a rigid tubular handle, a flexible hose section coupled to said handle, a resilient extension carried by said handle, means for clamping said hose section to said extension, said extension continuously tending to maintain said hose section in alinement with the handle, a nozzle member coupled to the end of said hose section and lying in a position to one side of the axis of said hose section, and a pull device connected to said nozzle, guides on said handle through which said pull device passes and means on said handle to which said pull device may be connected to hold said hose section curved as desired.

2. In a spraying appliance of the character described, a tubular handle, a flexible hose connection for joining the inner end of the handle with the water pressure supply, spraying elements mounted on the outer end of the handle, the said elements including a flexible hose section coupled at one end to the inner end of the said tubular handle, means mounted on the handle and connected with the spraying elements for flexing such elements and holding them to their flexed position, other means for restoring the spraying elements to a normal position, the said other means comprising a spring plate slidable at the outer end on the hose section, a stiffener member connected to and projected from the handle, the said stiffener member supporting the spring plate.

3. In a spraying appliance of the character described, a tubular handle, a flexible hose connection for joining the inner end of the handle with the water pressure supply, spraying elements mounted on the outer end of the handle, the said elements including a flexible hose section coupled at one end to the outer end of the tubular handle, a spraying head connected to the inner end of the said hose section, means mounted on the handle and connected with the spraying elements for flexing such elements and holding them to their flexed position, other means for restoring the spraying elements to a normal position, said other means comprising a spring plate slidable at the outer end on the hose section, a stiffener member connected to and projected from the handle, the said stiffener member supporting the spring plate, and means for holding the outer end of the stiffener in a fixed connection with the flexible hose section.

4. In a spraying device, a portable rigid handle, a flexible hose section extending from the end of said handle, a flexible bar

carried by said handle and extending beyond the end of the same, clamps for securing said hose section to said bar, a nozzle on the end of said hose section, and a pull device connecting said nozzle with said handle whereby said hose section and said flexible bar may be bent to assume any desired curvature, said flexible bar normally tending to hold said hose section in alinement with said handle and means on the handle to which said pull device may be connected to hold said hose section curved as desired.

LOUIS J. STICKLIN.

Copies of this patent may be obtained for five cents each, by addressing the "Commissioner of Patents. Washington, D. C."