June 19, 1956 A. P. BUQUOR 2,751,566

SAFETY PLUG AND KEEPER FOR MAGNETIC SOCKET

Filed Nov. 29, 1954

Fig. 1.

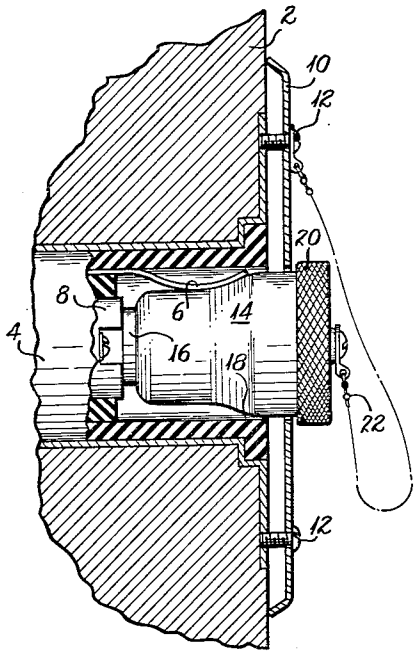

Fig. 2.

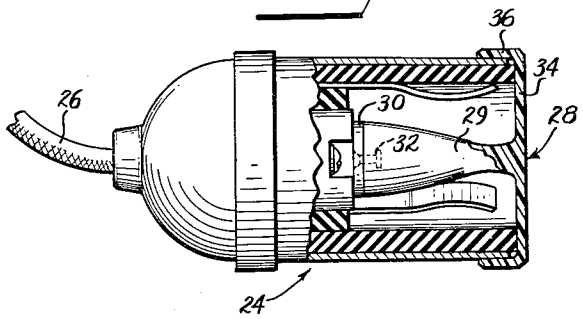

Fig. 3.

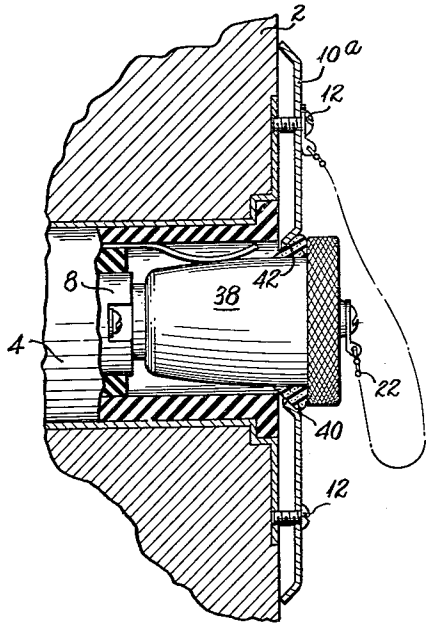

INVENTOR

ADOLPH P. BUQUOR

BY Bacon & Thomas

ATTORNEYS

United States Patent Office 2,751,566 Patented June 19, 1956

2,751,566

SAFETY PLUG AND KEEPER FOR MAGNETIC SOCKET

Adolph P. Buquor, Washington, D. C.

Application November 29, 1954, Serial No. 471,663

6 Claims. (Cl. 339—12)

This invention relates to a protective accessory for a magnetic socket intended for application thereto during periods of storage or non-use of the socket. A magnetic socket with which the present invention is particularly useful is fully disclosed in the application of Adolph P. Buquor and John L. Buquor, Serial No. 65,562, filed December 16, 1948. That application discloses an electrical connector socket element having a bipolar magnet in the bottom thereof constituting one electrical terminal of the connector. In use, a plug element having a paramagnetic end terminal is receivable in the socket to position its end terminal in contact with the poles of said magnet to be thereby held in place in the socket and to complete an electrical circuit through the magnet and armature.

Such sockets as disclosed in said copending application are not usually in constant use with a connector plug element therein and in any event are usually stored for some time, prior to installation, with no connector plug element therein. It is well known that a permanent magnet will lose its magnetism after a period of time, particularly if an air gap exists between its poles, and that the life of the magnet is very substantially increased if it at all times has a paramagnetic armature or "keeper" that extends between its poles.

The present invention relates to an accessory for use with such a socket, the accessory comprising a plug element constituting a protective closure for the socket and an armature or keeper for the magnet. The magnet keeper serves as means to hold the protective closure in place in the socket. The invention contemplates a safety plug of the type described to not only prevent accidental short circuiting in an unused socket after installation but also to provide for sealing the socket against entry of undesirable materials when exposed to the weather.

It is, therefore, an object of this invention to provide a safety plug to prevent accidental short circuiting in a magnetic socket during periods of non-use.

It is another object of this invention to provide such a safety plug functioning also as a keeper for the magnet.

It is still another object of this invention to provide a safety plug attaining the objects set forth above and further effecting a weathertight seal for the open end of a magnetic socket.

Further and additional objects and advantages will become apparent to those skilled in the art as the description proceeds in connection with the accompanying drawings, wherein:

Fig. 1 is a diagrammatic sectional view through an installed magnetic socket with the safety plug of the present invention therein;

Fig. 2 illustrates a form of safety plug particularly adapted for use with a magnetic socket on an extension cord or the like; and

Fig. 3 is a diagrammatic sectional view illustrating a safety plug for use with a magnetic socket installed outdoors or in environment where it is subject to unusual dust, moisture or similar conditions.

Fig. 1 shows diagrammatically a supporting structure 2, which may be the wall of a building or the like, having a magnetic socket 4 mounted therein. The magnetic socket comprises one or more side contacts 6 insulated from a bottom contact 8 comprising a permanent bipolar magnet. Magnetic sockets of this type are fully disclosed and described in the hereinbefore identified copending application. In Fig. 1 the magnetic socket 4 shown as mounted in a vertical surface which may be a wall or the like and a cover plate 10 is secured by screws 12 of the supporting structure. Obviously, such a socket, when not in use, presents a safety hazard since a conductive material could be accidentally inserted in the socket and effect a short circuit between the contacts 6 and 8. Furthermore, a person, particularly a young child, could readily place a finger in the socket and receive a severe shock if the contacts 6 and 8 were simultaneously engaged.

The safety plug of the present invention comprises a body 14 of any suitable insulating material having a para-magnetic armature 16 secured to its inner end in any suitable manner. The body 14 is of such size and configuration that the armature 16 may engage the poles of the magnet 8 and securely hold the safety plug in the socket. The body 14 is so formed as to substantially completely close the outer open end 18 of the socket 4 and extends outwardly therefrom to provide a grip portion 20 whereby the plug may be manually gripped and removed from the socket when it is desired to put the socket in use. If desired, a suitable chain or other flexible element 22 may be provided to tether the safety plug to the cover plate 10 to prevent its accidental loss.

In the modification shown in Fig. 2, the magnetic socket 24 is similar in all essential characteristics to that described in connection with Fig. 1 but is shown connected to an end of an extension or drop cord 26. The socket could, however, be mounted in a lighting fixture or the like. The safety plug 28 of this modification includes a paramagnetic armature 30 secured to the safety plug body 29 in any suitable manner, such as by the fastener 32 fixed to the armature 30 and having a head embedded in the body 29. The outermost end of the safety plug of this modification comprises a platelike closure 34, integral with the body 29 to which the armature 30 is attached and extending across the entire end of the socket 24. The closure plate 34 is provided with an axially extending peripheral flange 36 having an inner diameter to fairly snugly receive and embrace the end portion of the socket. If desired, the outer periphery of the flange 36 may be knurled whereby it may be readily manually manipulated to remove the safety plug from the socket when desired.

In the modification of Fig. 3 the safety plug 38 is substantially identical in all respects to the plug 14 shown in Fig. 1 but is provided with an annular resilient sealing gasket 40 engageable with the periphery of the opening 42 in cover plate 10*a* to effect a weathertight seal between the plug 38 and the cover plate. This modification is particularly useful for outdoor installations or where a magnetic socket 4 is installed in environments wherein an excessive amount of moisture, dust or the like is present.

In some installations the socket 4 may be mounted so that its open end projects to or through the cover plate 10*a*, in which case the resilient sealing gasket 40 will engage and seal the open end of the socket itself rather than the cover plate.

While a limited number of specific embodiments of the invention have been shown and described herein, it is to be understood that many other embodiments may be resorted to within the scope of the appended claims.

I claim:

1. In combination, a magnetic socket having an inner

end and an open outer end, a bipolar permanent magnet situated at the inner end of said socket and comprising an electrical contact, a side contact in said socket and insulated from said magnet, and a removable safety plug serving as a closure for said socket, said safety plug comprising a body of insulating material having an end portion provided with a paramagnetic terminal secured thereto spanning and engaging the poles of said magnet, said body projecting substantially to the open outer end of said socket and being of such transverse dimensions as to substantially close the open outer end of said socket, the portion of said plug opposite said side contact being a portion of the insulating material of said plug body.

2. A device as defined in claim 1 wherein said body is of a length greater than the depth of said socket, the end thereof opposite said terminal being formed to define a grip portion whereby said plug may be manually withdrawn from said socket.

3. A device as defined in claim 1 wherein said body is provided with resilient gasket means engaging and sealing the open end of said socket, said body being of such length as to extend beyond said gasket means when said plug is in use.

4. A device as defined in claim 1 wherein the end of said body opposite said terminal comprises a head overlying the open outer end of said socket, and a peripheral flange on said head extending toward said terminal and embracing the outer periphery of the open outer end portion of said socket.

5. A device as as defined in claim 1 wherein said paramagnetic terminal comprises a body of ferrous metal having a substantially planar end surface engaging both the poles of said magnet simultaneously.

6. In combination: an electrical socket having an inner end and an open outer end and having a magnet mounted at the inner end thereof, said magnet being adapted to serve as an electrical contact; and a plug mountable in said socket, said plug comprising a closure whereby said open outer end of said socket may be closed, an armature adapted to be attracted by and drawn into contact with said magnet, and means connecting said armature with said closure, whereby when said armature is drawn into contact with said magnet, said closure will be drawn into closing position at the outer end of said socket and held in said position, said closure being thereby adapted to close said socket when said socket is not being employed to complete an electrical circuit.

References Cited in the file of this patent

UNITED STATES PATENTS

794,140	Costa	July 4, 1905
1,271,981	Wright	July 9, 1918
2,268,700	Criger et al.	Jan. 6, 1942
2,403,137	Strickland	July 2, 1946
2,596,166	Peterson	May 13, 1952

FOREIGN PATENTS

128,831	Australia	Aug. 20, 1948