United States Patent

[11] 3,613,794

[72] Inventors **Robert J. Naumann**
Huntsville;
David W. Jex, Guntersville, both of Ala.

[21] Appl. No. **61,894**
[22] Filed **Aug. 7, 1970**
[45] Patented **Oct. 19, 1971**

[73] Assignee **The United States of America as represented by the Administrator of the National Aeronautics and Space Administration**

[54] **LIQUID AEROSOL DISPENSER**
4 Claims, 2 Drawing Figs.

[52] **U.S. Cl.** **169/28, 169/36**
[51] **Int. Cl.** **A62c 35/08**
[50] **Field of Search** ..... 169/1, 2 R, 28, 33, 36; 239/309; 222/389; 89/7; 102/6

[56] **References Cited**

UNITED STATES PATENTS

2,882,796	4/1959	Clark et al.	89/7
3,380,383	4/1968	Schnepfe, Jr.	222/389 X
3,515,217	6/1970	Jamison	169/2

Primary Examiner—M. Henson Wood, Jr.
Assistant Examiner—John J. Love
Attorneys—L. D. Wofford, Jr., A. H. Tischer and John R. Manning

ABSTRACT: A liquid aerosol dispenser is disclosed having an explosively driven piston that compresses a light gas to an extremely high pressure so as to rupture a first sealer on a container holding the liquid to allow admixing of the gas and the liquid. The container has a plurality of discharge nozzles covered with a rupturable sealer and upon rupture of the first sealer and admixing of the light gas and liquid, the sealer covering the nozzles is ruptured so as to allow the liquid to be expelled through the nozzles at a very high velocity in extremely fine droplet form.

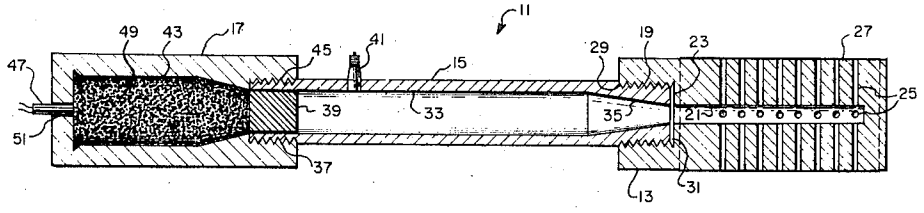

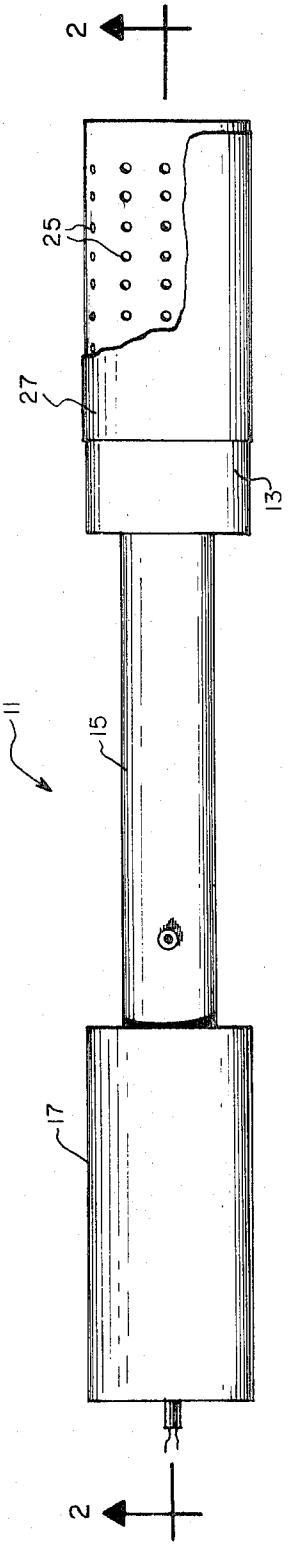

FIG. 1

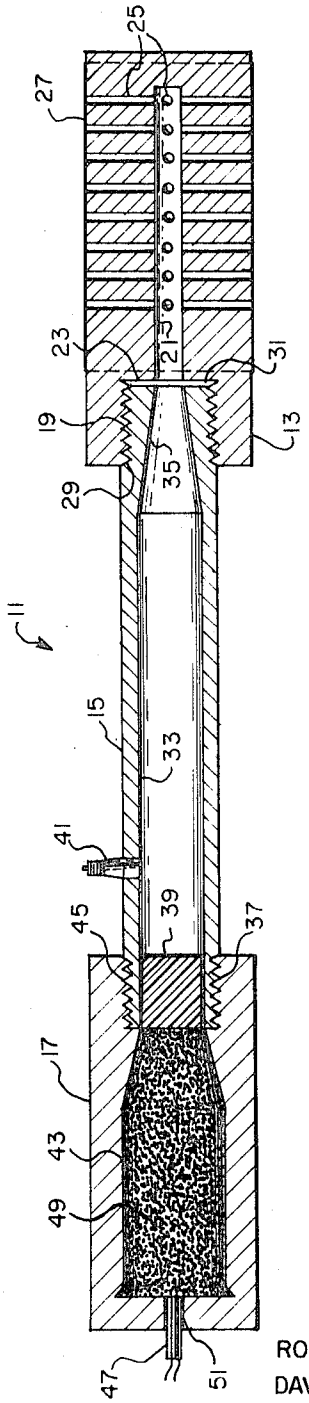

FIG. 2

ROBERT J. NAUMANN
DAVID W. JEX
INVENTORS

BY

ATTORNEYS

LIQUID AEROSOL DISPENSER

ORIGIN OF THE INVENTION

The invention described herein was made by employees of the United States Government and manufactured and used by or for the Government governmental purposes without the payment of any royalties thereon or therefor.

BACKGROUND OF THE INVENTION

1. FIELD OF THE INVENTION

This invention relates to a liquid-dispensing apparatus and more particularly to an apparatus for the facile ejection and dissemination of liquid aerosols.

2. DESCRIPTION OF THE PRIOR ART

It is often desirable to employ a device which will enable the substantially full and quick ejection of liquid aerosol into the atmosphere. For example, such a device would find use in dispensing quenching agents to stop the propagation of explosions in confined areas such as in coal mines.

An apparatus having quick ejection qualities can be obtained with a container or canister dispenser employing an explosive charge for expelling the liquid, but when such is attempted with an initially closed or sealed container difficult problems have previously been encountered in the conflicting requirements of providing a strong enough seal to prevent undesired or inadvertent preopening, while providing sufficient pressure to cause opening of the cover at the discharge opening to enable ejection of the liquid in aerosol form. It is also necessary, that in the case of ejecting aerosols from a container through the use of an explosive charge, that the detonation of the explosive charge should present no hazard either directly or as the result of flying fragments.

It is accordingly an object of this invention to provide an apparatus for quickly dispensing liquid aerosols.

It is another object of this invention to provide an explosively activated aerosol dispenser in which no hazards from fragments of the container result.

Still another object of the invention is to provide an apparatus for dispensing aerosols that is refillable.

SUMMARY OF THE INVENTION

In general the present invention provides for the dispensing of liquid aerosols through the novel technique of explosively compressing a gas to effect in seriatim, a first rupture the container holding the liquid to be dispensed, admixing of the gas and the liquid and a second rupture of the container to allow the mixture to be ejected from the container. X

BRIEF DESCRIPTION OF THE DRAWING

For a more complete understanding of the invention, reference is now made to the following description of a preferred embodiment and to the drawing, in which:

FIG. 1 is a top plan view illustrating one embodiment of the present invention; and

FIG. 2 is a sectional view along line 2—2 of FIG. 1.

DESCRIPTION OF THE PREFERRED EMBODIMENT

Referring now to FIGS. 1 and 2, the aerosol dispensing apparatus 11 constructed in accordance with the present invention includes a container 13 for holding the liquid to be sprayed, a gas compression tube 15 for containing a gas under pressure and an explosive charge housing 17.

THE CONTAINER 13

Container 13, preferentially, though not obligatorily, is of a generally elongated cylindrical configuration and is provided with an inside threaded end portion 19 at one end thereof. The container is provided with a bore 21 of reduced diameter from the threaded portion 19 so as to present annular shoulder 23. The container is additionally provided with a plurality of discharge nozzles 25 that communicated with bore 11 and extend radially from the axis defined by bore 11. Disposed on the outside surface of the container 13 is a rupturable sealer

27 shown partially cut away in FIG. 1 to expose discharge nozzles 25. Sealer 27 may conveniently comprise a thin plastic sheet that is adhesively applied to the container 13 so as to normally cover discharge nozzles 25.

THE GAS COMPRESSION TUBE 15

Gas compression tube 15 is also of a generally elongated cylindrical configuration having an outside threaded end portion 29 at one end that is adapted to engage threaded portion 19 of container 13. The tube 15 is provided with a bore 33, with one end of the bore tapered as shown at 35. Additionally, the tube 15 is provided with an outside threaded end portion 37 and with a valve 41 of conventional design for use in inserting gas into bore 33. A rupturable diaphragm sealer 31 is adapted to be placed over annular shoulder 23 to close the end of bore 21 from bore 33. Sealer 31 may comprise a thin plastic disc and in a manner to be described hereinafter is preferably designed to remain intact until maximum pressure of the gas is obtained in compression tube 15. Disposed within bore 33 and normally positioned at the left end of bore 33 as shown in FIG. 2, is piston 39. To increase the gas pressure sealing between opposite faces of the piston, the piston is preferably of slightly greater diameter than the untapered portion of the bore 33 so as to have a compressible fit with the bore. The piston is preferably made of a deformable material such as polyethylene.

THE EXPLOSIVE CHARGE HOUSING 17

The explosive charge housing 17 is of a generally elongated cylindrical configuration having a cavity 43 with a threaded end portion 45 adapted to engage threaded end portion 37 of tube 15. The remaining portion of the cavity 43 is adapted to be filled with a suitable ignitable gas-generating propellant charge 49. For use in detonating the explosive charge 49 a conventional electrical primer 47 is mounted in a bore 51 that communicates with cavity 43.

OPERATION

In operation, the container 13 is filled with the liquid to be dispensed, as for example by separating the gas compression tube 15 from the container 13 and filling bore 21. If the present invention were to be used to dissipate the propagation of explosions, the liquid used could comprise water.

After being filled with the liquid the gas compression tube is coupled to the container 13 with the sealer 23 in place as previously described so as to enclose the liquid within the container 13. The gas compression tube is then charged with a gas by inserting the gas through valve 41. So as to increase the kinetic energy available per unit volume of the gas, it is preferable to use a light gas such as hydrogen or helium and to charge the tube with the selected gas under pressure. It will be recognized however that for use in quenching explosions, the gas used must also be inert and in this case helium would be most suitable.

When it is desired to expel the liquid from bore 21, the propellant charge is exploded by activating electrical primer 47. Ignition of the propellant charge 49 and the ensuing gas pressure build up effects axial movement of piston 39 toward the tapered end 35 of bore 33 whereupon the piston is extruded into the tapered end 35. As the piston extrudes into the tapered end it is retarded but compresses the gas to an extremely high pressure that will cause sealer 23 to rupture. To allow maximum pressure build up of the gas, the sealer 31 is designed to remain intact until a desired pressure is obtained. After rupture of sealer 31 the gas will expand into the bore 21 to effect an admixture of the gas and liquid and thence cause a rupture of sealer 27 over the discharge nozzles 25 whereupon the liquid will be discharged into the atmosphere. Because of the extremely high pressure of the compressed gas, the liquid is driven at a very high speed through the nozzles 25 and the resulting spray will be of extremely fine droplets having a very high speed.

While the invention has been illustrated and described with respect to the single embodiment, it will be readily apparent to those skilled in the art that various modifications and improvements may be made without departing from the scope and

spirit of the invention. Accordingly, it is to be understood that the invention is not to be limited by the illustrative embodiment, but only by the scope of the appended claims.

We claim:

1. An apparatus for dispensing a liquid aerosol comprising:

a container having a cavity for holding the product to be sprayed, said container having a plurality of discharge nozzles communicating with said cavity and having an input port communicating with said cavity;

rupturable sealer means associated with said discharge nozzles and with said input port for normally containing the product to be sprayed within said container;

a gas compression tube having a bore for containing a gas under pressure, said bore having a cylindrical end portion and a tapered end portion;

first means for securing said gas compression tube to said container with said tapered end portion in open alignment with said input port;

a piston in said bore normally positioned at the end of said tube remote from said container, said piston consisting of a deformable material;

an explosive charge housing having an outlet port;

second means for securing said housing to said tube with said outlet port positioned in open alignment with said cylindrical end portion of said bore; and

an explosive charge positioned in said housing and adapted upon detonation to drive said piston along said cylindrical portion to be extruded into said tapered portion and to compress the gas in said bore so as to effect in seriatim, rupture of said sealer associated with said input port, admixing of said gas and said product to be sprayed, rupture of said sealer means associated with said output nozzles and discharge of said product through said output nozzles.

2. The apparatus of claim 1 wherein said rupturable sealer means includes a plastic sheet secured to said container covering said discharge nozzles and a plastic disc secured between said bore of said gas compression tube and said cavity of said container.

3. The apparatus of claim 1 wherein said piston consists of a polyethylene material.

4. The apparatus of claim 2 wherein said gas comprises helium.