March 1, 1938. L. D. NORTON ET AL 2,110,092

COMMERCIAL PHONOGRAPH

Original Filed Oct. 4, 1935 2 Sheets-Sheet 1

Fig. 1.

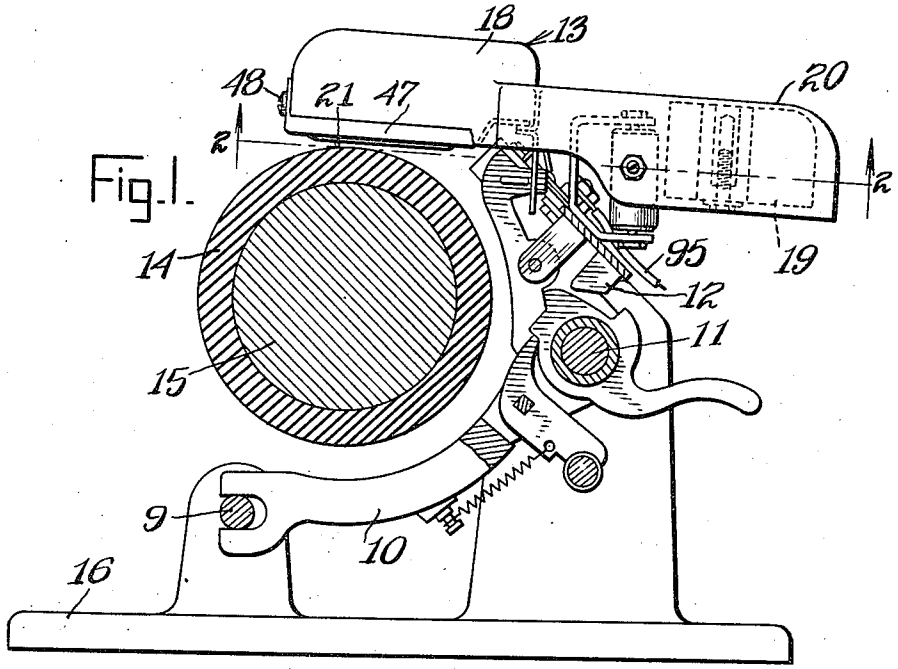

Fig. 2.

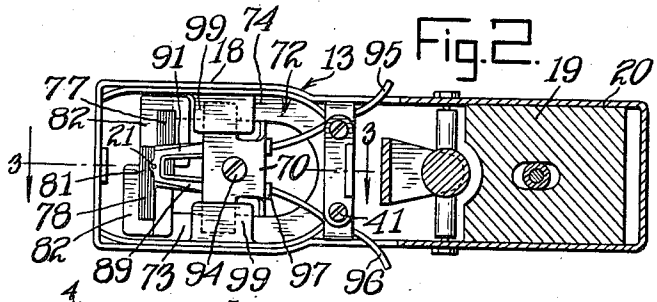

Fig. 3.

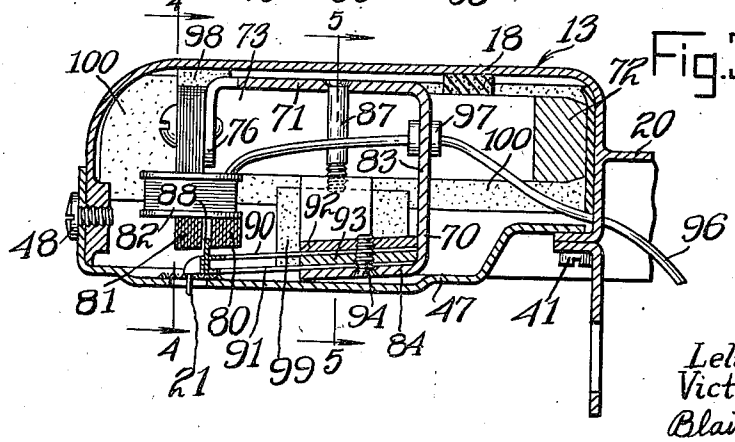

INVENTORS
Leland D. Norton
Victor L. Frykman
Blair, Curtis & Dunne
ATTORNEYS

March 1, 1938. L. D. NORTON ET AL 2,110,092

COMMERCIAL PHONOGRAPH

Original Filed Oct. 4, 1935 2 Sheets-Sheet 2

Fig. 4.

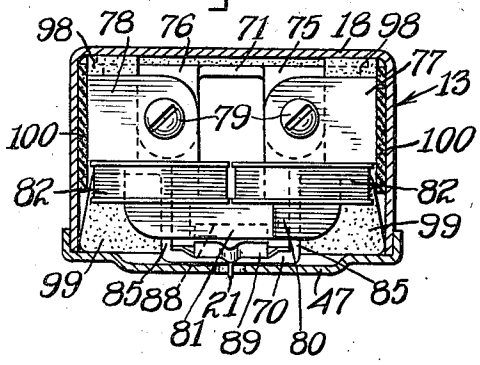

Fig. 5.

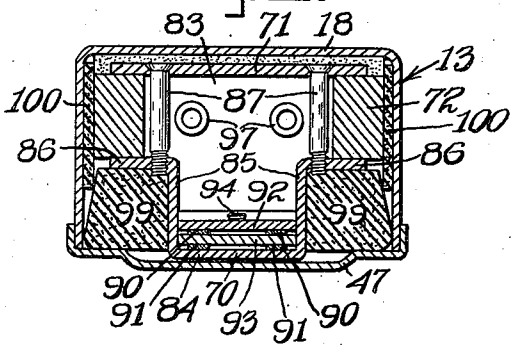

Fig. 6.

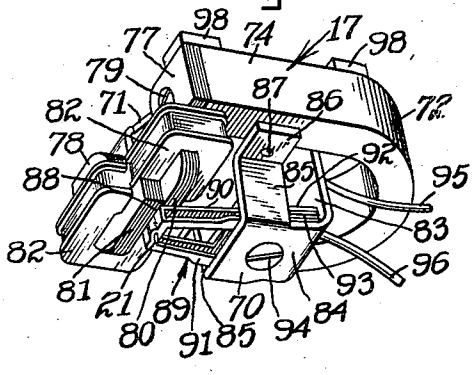

Fig. 7.

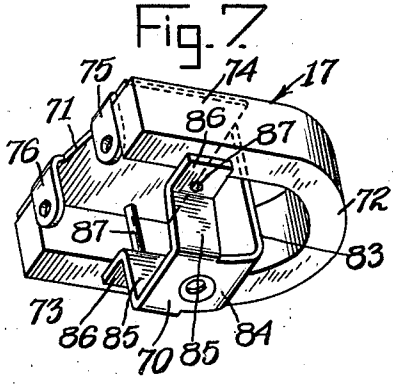

INVENTORS
Leland D. Norton
Victor L. Frykman
Blair, Curtis & Dunne
ATTORNEYS

Patented Mar. 1, 1938 2,110,092

UNITED STATES PATENT OFFICE

2,110,092

COMMERCIAL PHONOGRAPH

Leland D. Norton, Fairfield, and Victor L. Frykman, Bridgeport, Conn., assignors to Dictaphone Corporation, New York, N. Y., a corporation of New York

Original application October 4, 1935, Serial No. 43,576. Divided and this application July 15, 1936, Serial No. 90,654

3 Claims. (Cl. 179—100.41)

This invention relates to commercial phonographs, and more particularly to such machines of the transcribing type.

An object of the invention is to provide a machine of the character described adapted through the utilization of electro-magnetic means efficiently to reproduce a sound record. A further object is to provide a sound translation device of the electro-magnetic type characterized by simplicity of construction and unusual sensitivity and faithfulness of reproduction over a wide range of audible frequencies. Other objects will be in part obvious and in part pointed out hereinafter.

This application is a division of application Serial No. 43,576, filed October 4, 1935.

In the drawings, which illustrate one embodiment of the invention,

Fig. 1 is a side elevation partly in section, showing the reproducer supported by its carriage, feeding means for the carriage, and means for controlling the reproducer and feeding means;

Fig. 2 is a horizontal section through the translation unit and housing taken on line 2—2 of Fig. 1;

Fig. 3 is a vertical section through a portion of the translation unit and housing taken on line 3—3 of Fig. 2;

Fig. 4 is a cross-section taken on line 4—4 of Fig. 3;

Fig. 5 is a cross-section taken on line 5—5 of Fig. 3;

Fig. 6 is a perspective view of the translation unit removed from its housing; and

Fig. 7 is a perspective view of the magnet and its clamping member.

The phonographic machine shown in the accompanying drawings for the purpose of illustrating the invention is a transcribing machine having a carriage 10, mounted upon guide rods 9 and 11, and comprising a head 12 adapted to support a reproducer or pick-up unit 13, for reproducing sound recorded upon a record cylinder 14, mounted in a well known manner upon a rotatable mandrel or record support 15. Carriage, guide rods, mandrel, and driving mechanism (not shown) are all suitably mounted upon a frame 16, also of well known construction.

The reproducer unit comprises an electro-magnetic translation device, best shown in Fig. 5 and indicated generally by the reference character 17, supported within a housing 18, and an adjustable counterweight 19, supported within a forward extension 20 of said housing.

The translation unit 17 referred to above is adapted to be completely assembled independently of its housing and, after assembly, to be received within the rear portion 18 of the housing where it is supported and held immovably in place by means of the bottom cover 47, without the use of bolts or screws other than those employed to hold the cover in place.

Referring to Figs. 2 to 7, inclusive, the translation unit 17 will be seen to consist of a number of parts all supported upon or within a single frame clamping member 70, best seen in Figs. 5 and 7. Member 70 is formed with an upper plate-like portion 71 against which the permanent horse-shoe magnet 72 is clamped. This magnet has a relatively long leg 73 and a shorter leg 74.

At the rear end of the clamping member 70 are a pair of downwardly extending lugs 75 and 76, which are relatively offset a distance equal to the difference in the lengths of the magnet legs 73, 74. These lugs are adapted to support substantially S-shaped pole-pieces 77 and 78 in proper relation to the respective magnet legs. The upper part of pole-piece 77 may be brought into contact with the exterior surface of lug 75 and held firmly thereagainst by means of a machine screw 79. Pole-piece 78 is similarly attached to lug 76. At their lower ends, these pole-pieces, due to their offset mounting, overlap their respective pole-tips 80 and 81 extending one beyond the other and crossing the longitudinal center line of the magnet. Each pole-piece supports a coil 82, which coils are connected so that their effect is additive. The said coils fit tightly about the pole pieces, which are laminated, and help to hold the laminations close together.

Extending downwardly from the plate-like top member 71 of the clamp 70 is a portion 83 of a width adapting it to pass between the legs of the magnet. This portion 83 extends a predetermined distance beneath the magnet and then the clamp 71 is turned rearwardly toward the lugs 75, 76, but this portion of the clamp, indicated by the reference numeral 84, does not extend as far as the lugs 75, 76. At the forward end of this portion the clamp member is bent or formed with a pair of upwardly extending arms 85, which, at their upper ends, are bent outwardly to provide clamping elements 86 underlying the legs of the magnet 74, and between which and the plate 71 the magnet is firmly clamped by means of countersunk-headed machine screws 87.

From the description so far, it will be seen that the coils may first be assembled upon their respective pole-pieces, the pole-pieces then fastened

to the lugs 75, 76 of the clamping member, and then magnet 72 may be positioned in between the clamping elements of the clamping member until the ends of the legs of the magnet come into close contact with the pole-pieces. When properly positioned, the clamp screws 87 may be set up tightly to hold the magnet in fixed relation to the clamping member.

The armature of the translation unit consists of a small rectangular flat plate 88, best seen in Figs. 3 and 6. This plate in the neutral position of the parts extends a short distance into the gap formed between the overlapping pole-tips 80, 81. It is composed, of course, of magnetic material as are the said pole-tips, and is supported upon an exceedingly light aluminum vibratory member 89, which comprises, upon each side of the longitudinal center line of the magnet, a pair of spaced lightly constructed arms 90 and 91. The arms 90, 91 at their rear ends are joined together and the arms 90, 91 upon one side of the axis of the magnet are further joined to the arms 90, 91 upon the other side of the axis of the magnet so that the structure of the armature support is substantially a U-shaped member, both arms of which consist of thin spaced elements. At their forward ends, these spaced elements are not united, but are held between the inner surface of the portion 84 of the clamping member and a fibre plate 92. A second fibre plate 93 lies between the two pairs of horizontally disposed members 90, 91. A countersunk-headed screw 94 serves to unite these parts and hold them in rigid adjustment. By loosening the screw 94, the armature support may be moved relatively to the clamping member so as to center the armature in proper relation to the pole-tips, after which the screw 94 may be tightened to hold the adjustment.

Rearwardly of the armature plate 88, the aluminum supporting member 89 is provided with a downwardly extending stylus 21 designed to follow the sound track of the record, and, since this translation device is intended for use with hill-and-dale cylindrical records, the stylus will be moved up and down as it follows the track, causing the armature 88 to deviate from its neutral position and enter farther between the pole-tips or be withdrawn somewhat from the neutral position therebetween as the case may be. By changing the reluctance of the air gap between the pole-tips as it moves up and down between them, the armature effects changes in the reluctance of the whole magnetic circuit, and thus induces in the coils 82 currents corresponding in frequency and amplitude to the characteristics of the sound track. As said before, the armature affected coils are connected so that the current induced therein is additive and so that the combined current from the two coils pulsates through the connections 95, 96, which connect said coils with any suitable instrument adapted to translate the electrical impulses into sound waves, and any suitable amplifier may be interposed between the translation device 17 and such other translation device. These connections 95, 96 are shown in Fig. 2 as passing through insulators 97 mounted in the portion 83 of the clamping device 70 and then forwardly through partition member 39.

When the parts thus far described have been assembled in a complete unit, small pieces of rubber or other suitable cushioning material as 98 may be secured to the upper surface of the magnet 72 and then the whole unit may be fitted into the upper part of its housing, after which a pair of rubber or other cushioning members 99, of a size and shape adapted to fit between the portions 85, 86 of the clamping member and the side walls 45, 46 of the housing are slipped into position. The bottom cover may now be put on the housing and made fast by means of the screws 41, 48. This cover engages the cushioning members 99 and thus the translation unit is more or less resiliently held within its housing. A sheet of rubber or similar cushioning or damping material, as 100, extends over the magnet between it and the top housing and down inside the side walls of the housing (see Fig. 4), forming a lining for those portions of the housing against which the unit rests in addition to its points of contact with the members 98.

While the present construction and relation of armature, armature support, and pole-pieces is a preferred embodiment of the present invention, it should be understood that the shape of the armature and the disposition of the pole-pieces may be varied somewhat without departing from the principles of the invention. One of the features of prime importance is the employement in a magnetic type of reproducer of a small magnetic armature mounted to vibrate with a very light non-magnetic support. Thus the inertia of the moving parts is reduced to a very low value so that when used upon wax records of the usual type used in commercial phonographs, the movement of the vibratory parts may accurately follow the undulations of the sound groove over a very wide range of frequencies and be capable of transmitting accurately the higher frequencies of speech, even up to and above frequencies of six thousand cycles. If the mass of this moving portion of the translation device were high, the stylus would not follow the variations of the sound track rapidly enough, particularly in respect to the higher frequencies, and would tend to scrape off the higher portions of wax in the sound track, thus ruining the recording for further reproduction and, at the same time, producing distortion. After many tests it has been found that optimum results are attained when the weight of the vibratory member, including the armature and its support, is less than one-half gram. The lead weight 19 used to counterbalance the reproducer unit is, as said above, movable within limits. It has been found best, in relation to such a light armature and support, to adjust the weight on the point of the stylus to a value somewhat below twenty-five grams. Wear, frequency characteristics and the mechanical operating characteristics of the reproducer are all affected by the weight upon the point of the stylus.

It should be noted also that the ratio of the weight of the armature parts and the weight of the reproducer as a whole must, for best results, fall within certain predetermined limits. For, if the weight of the armature and its support is high and its support is stiff, there is a tendency to raise the reproducer as a whole with every undulation of the wax. By a proper determination of the weight and the natural period of vibration of the armature and its support, and the weight and natural period of vibration of the reproducer unit as a whole, the quality of reproduction may be brought to a very high degree of perfection so that little distortion will take place even at the higher speech frequencies, and the operation of the reproducer in relation to the wax record be so free from inertia effects as not to cause appreciable damage to the undulations of the record track.

As many possible embodiments of the present invention may be made without departing from the scope thereof, it is to be understood that all matter herein set forth or shown in the accompanying drawings is to be interpreted as illustrative and not in a limiting sense.

We claim:

1. In a translation device for phonographs, in combination, a horse-shoe magnet having pole-pieces offset relatively to the plane common to the longitudinal axes of the two legs of the magnet to provide a laterally displaced air-gap, an armature comprising a magnetic member extending into said air-gap a predetermined distance, and non-magnetic means extending laterally beyond the legs of the magnet for supporting said armature for vibratory movement in said displaced air gap.

2. In a translation device for phonographs, in combination, a U-shaped magnet having legs of unequal length, a pair of pole-pieces adapted to overlap beyond the ends of said magnet to define an air-gap, a magnetic armature carried by a non-magnetic vibratory support, and a non-magnetic member adapted to grip opposite sides of both legs of said magnet and comprising means supporting said pole-pieces in operative relation to the ends of the respective legs, and other means for supporting said armature support in operative relation to said pole-pieces.

3. In a translation device for phonographs, in combination, a U-shaped magnet having legs of unequal length, a pair of pole-pieces adapted to overlap beyond the ends of said magnet to define an air-gap, a magnetic armature carried by a non-magnetic vibratory support, a non-magnetic member adapted to grip opposite sides of both legs of said magnet and comprising means supporting said pole-pieces in operative relation to the ends of the respective legs and other means for supporting said armature support in operative relation to said pole-pieces, and armature actuating coils mounted on said pole-pieces.

LELAND D. NORTON.
VICTOR L. FRYKMAN.

CERTIFICATE OF CORRECTION.

Patent No. 2,110,092. March 1, 1938.

LELAND D. NORTON, ET AL.

It is hereby certified that error appears in the printed specification of the above numbered patent requiring correction as follows: Page 1, first column, line 50, for "Fig. 5" read Fig. 6; and second column, line 11, for "Figs. 5" read Figs. 6; and that the said Letters Patent should be read with these corrections therein that the same may conform to the record of the case in the Patent Office.

Signed and sealed this 26th day of April, A. D. 1938.

(Seal)

Henry Van Arsdale,
Acting Commissioner of Patents.