C. A. HOWELL.

WIRE FENCE STRETCHER.

APPLICATION FILED JULY 18, 1912.

1,068,587. Patented July 29, 1913.

Fig. 1.

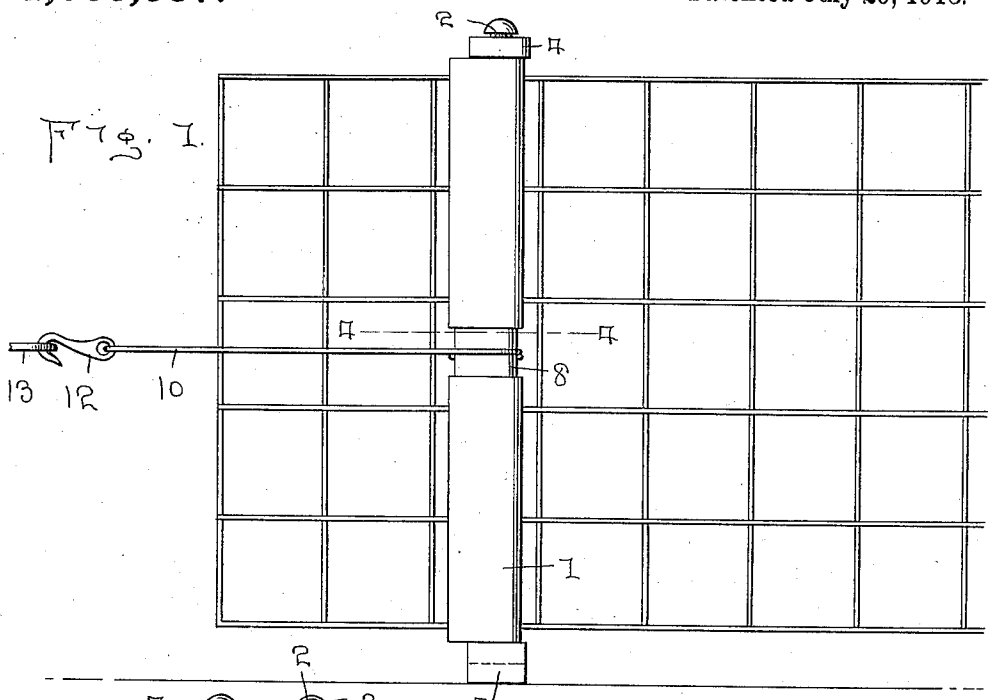

Fig. 2.

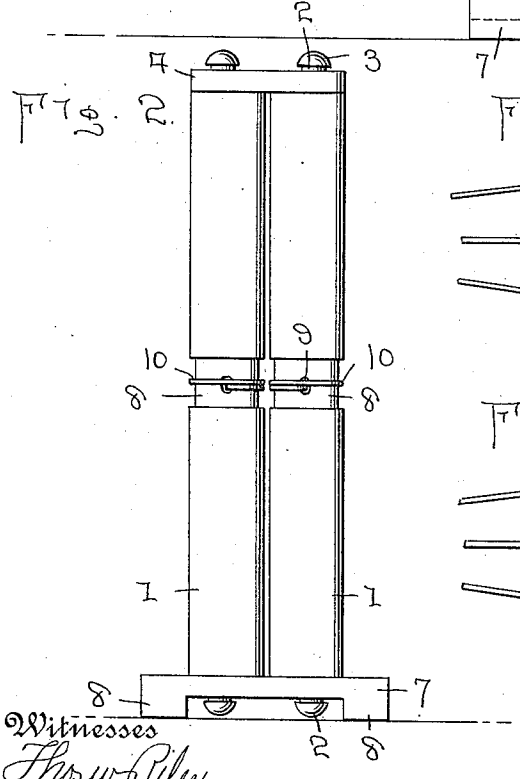

Fig. 3.

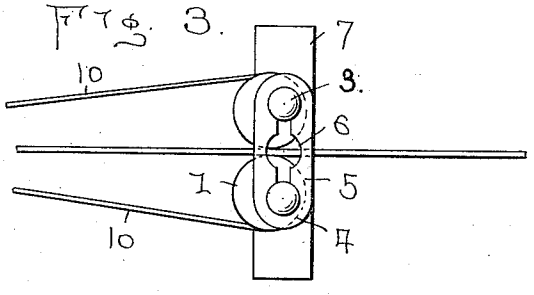

Fig. 4.

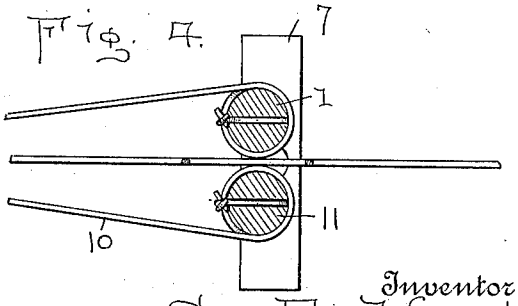

Witnesses

Thos. W. Riley

M. Newcomb

Inventor

C. A. Howell

By W. T. Fitzgerald & Co.

Attorneys

COLUMBIA PLANOGRAPH CO., WASHINGTON, D. C.

UNITED STATES PATENT OFFICE.

CHARLES A. HOWELL, OF HOWE, NEBRASKA.

WIRE-FENCE STRETCHER.

1,068,587. Specification of Letters Patent. Patented July 29, 1913.

Application filed July 18, 1912. Serial No. 710,230.

To all whom it may concern:

Be it known that I, CHARLES A. HOWELL, a citizen of the United States, residing at Howe, in the county of Nemaha and State of Nebraska, have invented certain new and useful Improvements in Wire-Fence Stretchers; and I do hereby declare the following to be a full, clear, and exact description of the invention, such as will enable others skilled in the art to which it appertains to make and use the same.

My invention relates to wire fence stretchers.

The object of my invention is to provide a portable wire fence stretcher composed of separable parts, whereby the stretcher may be positioned about the fence to be stretched, at or intermediate the ends thereof.

Other objects will appear hereinafter.

In the accompanying drawings, Figure 1 is a side elevation of the fence stretcher applied to a fence. Fig. 2 is a rear elevation of the wire fence stretcher. Fig. 3 is a top plan view thereof, and, Fig. 4 is a sectional view on the line 4—4 of Fig. 1.

Referring more particularly to the drawings, 1 represents a pair of cylindrical rollers carrying at their opposite ends eccentrically arranged pivot pins 2, having heads 3 formed at their outer ends. Connecting the pivot pins 2 at the upper ends of the rollers 1, is a strap 4 provided with a longitudinal slot 5, having the central portion thereof enlarged, as at 6, whereby said rollers may be moved to allow the headed end of the pivot pins 2 to be removed through the enlarged portion 6 of the slot 5. Supporting the rollers 1 and receiving the pivot pins 2 carried by the lower ends thereof in the same manner in which the upper pins 5 are received within the strap 4, is the base 7, having the end extensions 8 for supporting the ends of the lower pins above the ground. The central portion of the rollers 1 is provided with a circumferential channel 8, said channeled portion being apertured as at 9, to receive one end of a flexible cord 10. Said cord is knotted at one end to prevent it being withdrawn from the aperture 9, and a portion of the cord adjacent the knotted end is coiled around the channeled portion 8, as at 11. The coils upon the two rollers are disposed in opposite directions, whereby when the free ends of said cords are pulled, the rollers will be caused to move together in unison. The free ends of the cord are provided with hooks or the like 12 for attaching thereto a suitable connection 13 to a winding drum or other source of power.

It will be seen from the foregoing, that I have provided a wire stretcher which will be effective in use and which is composed of comparatively few parts, said parts being of simple construction and capable of being cheaply manufactured. It will be further apparent that owing to the separability of the parts, the device may be easily disconnected and connected at will at any desired point upon a fence.

What I claim is:—

1. A wire fence stretcher comprising a pair of rollers, pivot pins carried by the opposite ends of each of said rollers, straps connecting the upper ends of said rollers and positioned over said pins, a base for supporting said rollers and receiving said lower pivot pins, the central portion of said rollers being circumferentially channeled, cords coiled about the channeled portion of each of said rollers, and hooks carried by the free ends of said cords.

2. A wire fence stretcher comprising a pair of rollers, headed pins eccentrically secured in the opposite ends of said rollers, a strap having a slot therein for receiving the pins at the upper ends of the rollers, the central portion of said slot being enlarged to allow movement of the heads of said pins therethrough, a base having a slot enlarged centrally to receive the lower pins, and cords coiled about the central portions of said roller.

In testimony whereof I have signed my name to this specification in the presence of two subscribing witnesses.

CHARLES A. HOWELL.

Witnesses:
H. S. STUMPP,
JACOB JENKINS.

Copies of this patent may be obtained for five cents each, by addressing the "Commissioner of Patents Washington, D. C."