M. D. SHIVERICK.

MACHINE FOR APPLYING INSULATION IN LIQUID FORM TO WIRE.

APPLICATION FILED APR. 14, 1920. RENEWED AUG. 3, 1922.

1,432,795. Patented Oct. 24, 1922.

4 SHEETS—SHEET 1.

Fig. 1.

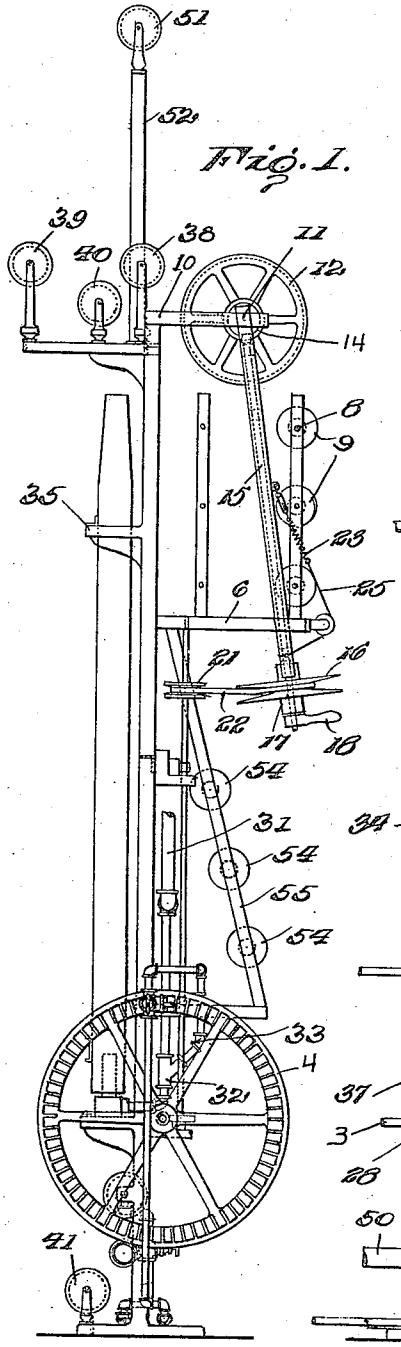

Fig. 2.

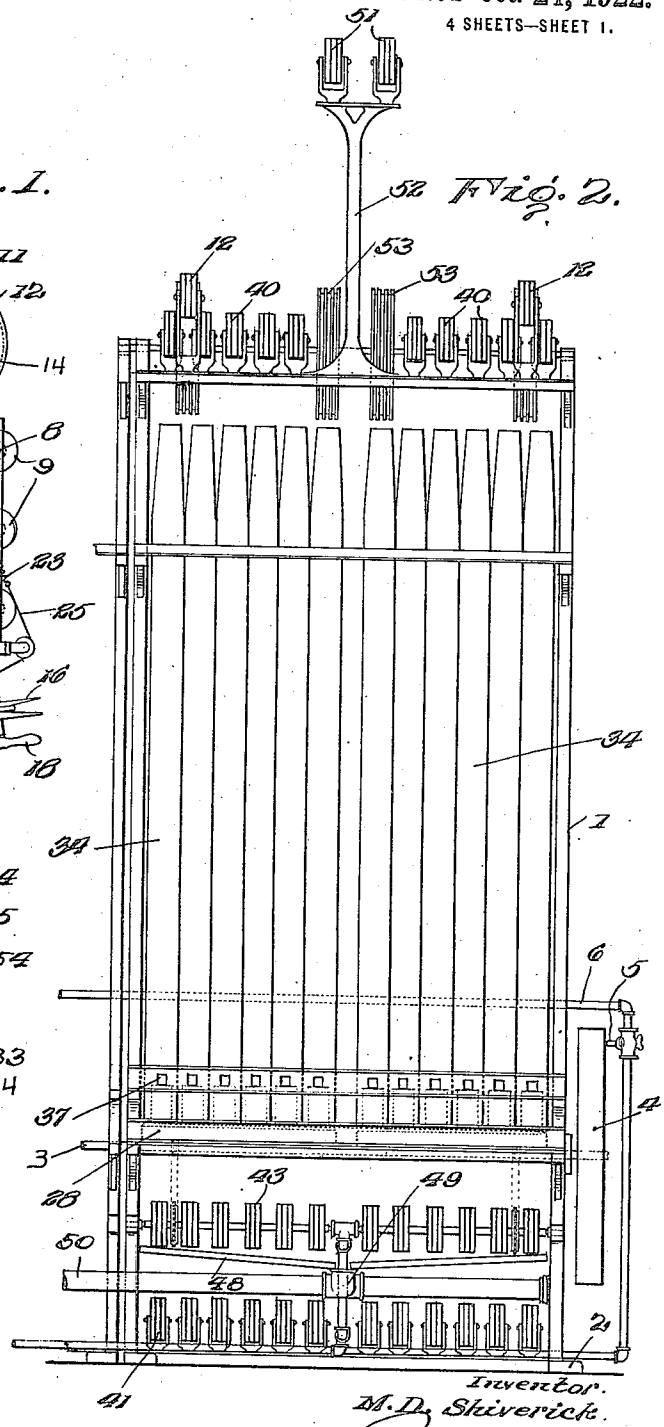

Inventor.
M. D. Shiverick.
by
Atty.

M. D. SHIVERICK.

MACHINE FOR APPLYING INSULATION IN LIQUID FORM TO WIRE.

APPLICATION FILED APR. 14, 1920. RENEWED AUG. 3, 1922.

1,432,795.

Patented Oct. 24, 1922.

4 SHEETS—SHEET 2.

Fig. 3.

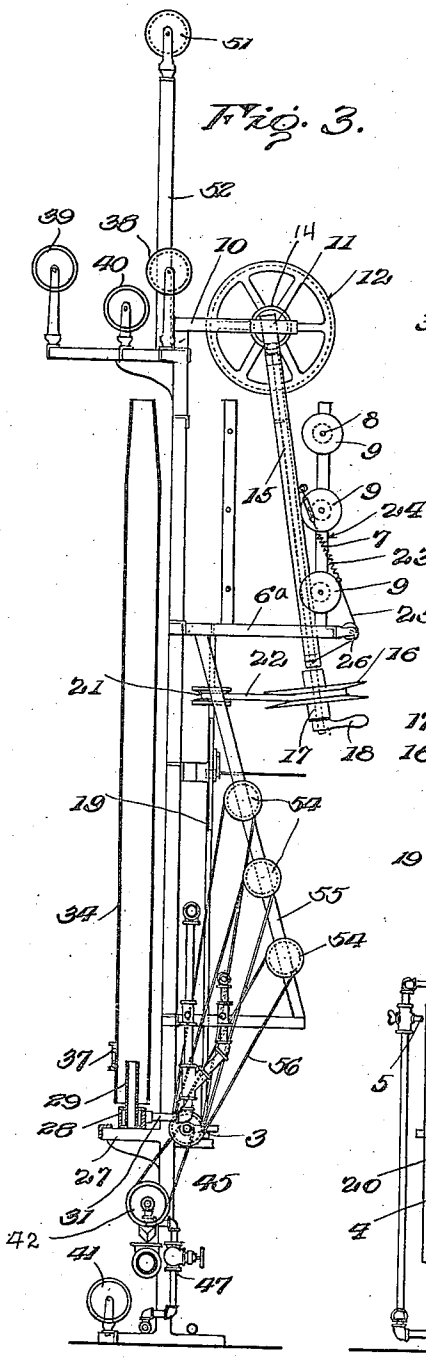

Fig. 4.

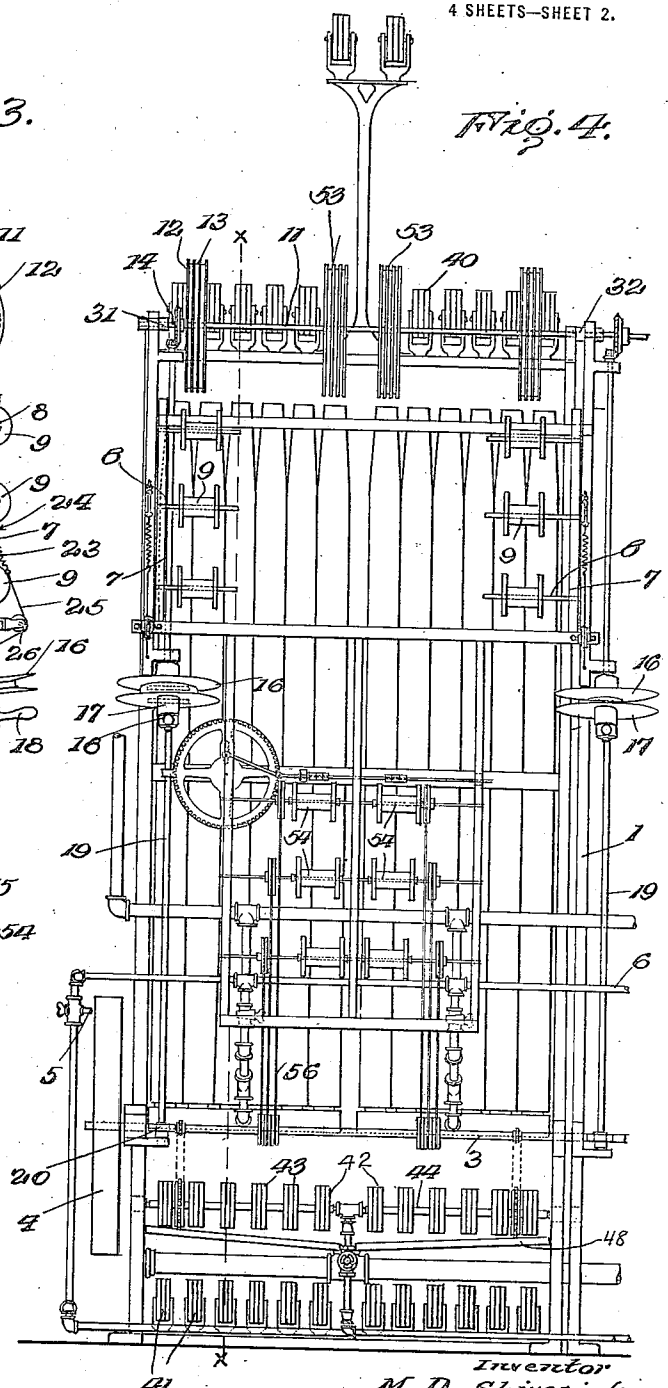

Inventor
M. D. Shiverick
by
Atty.

M. D. SHIVERICK.

MACHINE FOR APPLYING INSULATION IN LIQUID FORM TO WIRE.

APPLICATION FILED APR. 14, 1920. RENEWED AUG. 3, 1922.

1,432,795. Patented Oct. 24, 1922.

4 SHEETS—SHEET 3.

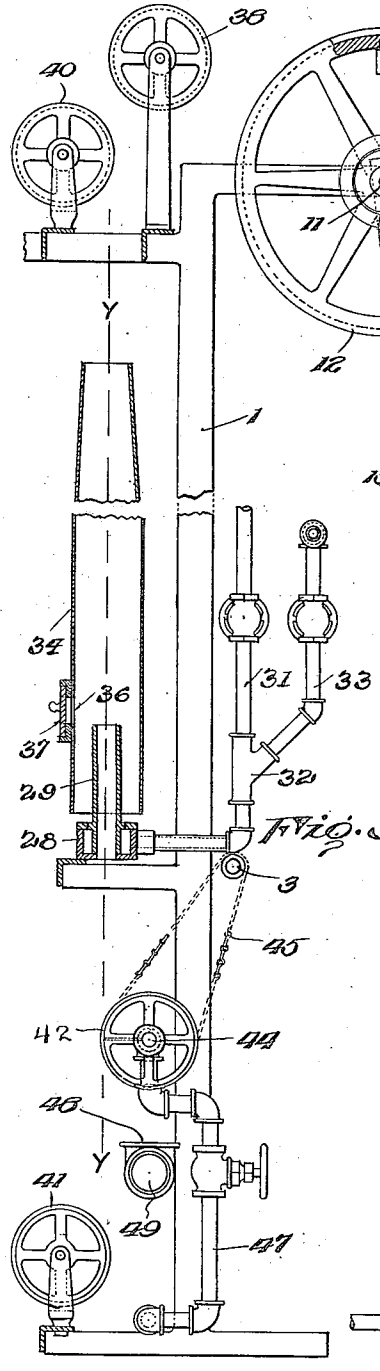

Fig. 5.

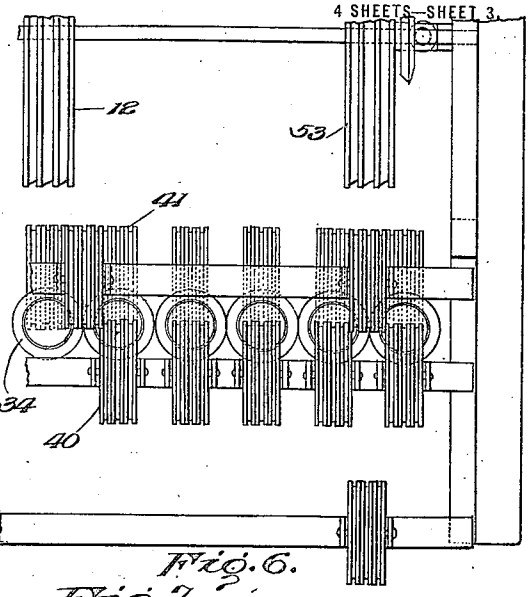

Fig. 6.

Fig. 7.

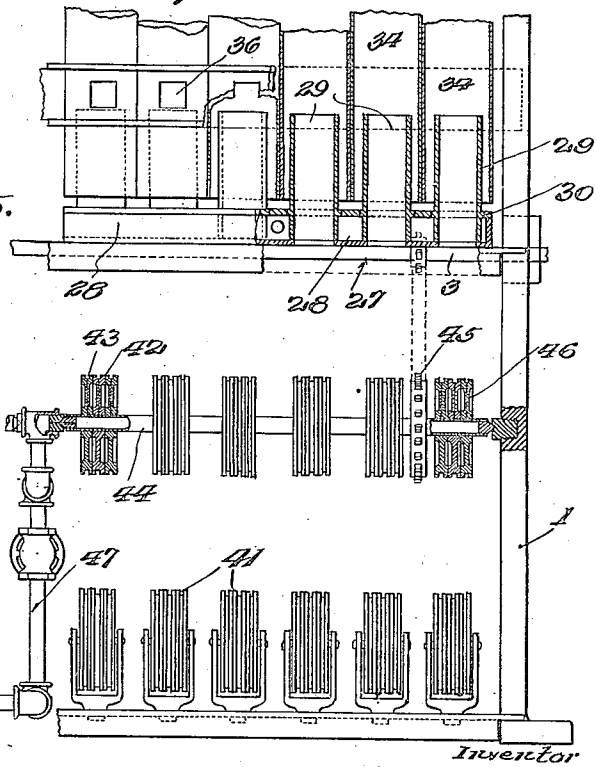

Inventor
M. D. Shiverick.

by [signature] Atty.

M. D. SHIVERICK.

MACHINE FOR APPLYING INSULATION IN LIQUID FORM TO WIRE.

APPLICATION FILED APR. 14, 1920. RENEWED AUG. 3, 1922.

1,432,795. Patented Oct. 24, 1922.

4 SHEETS—SHEET 4.

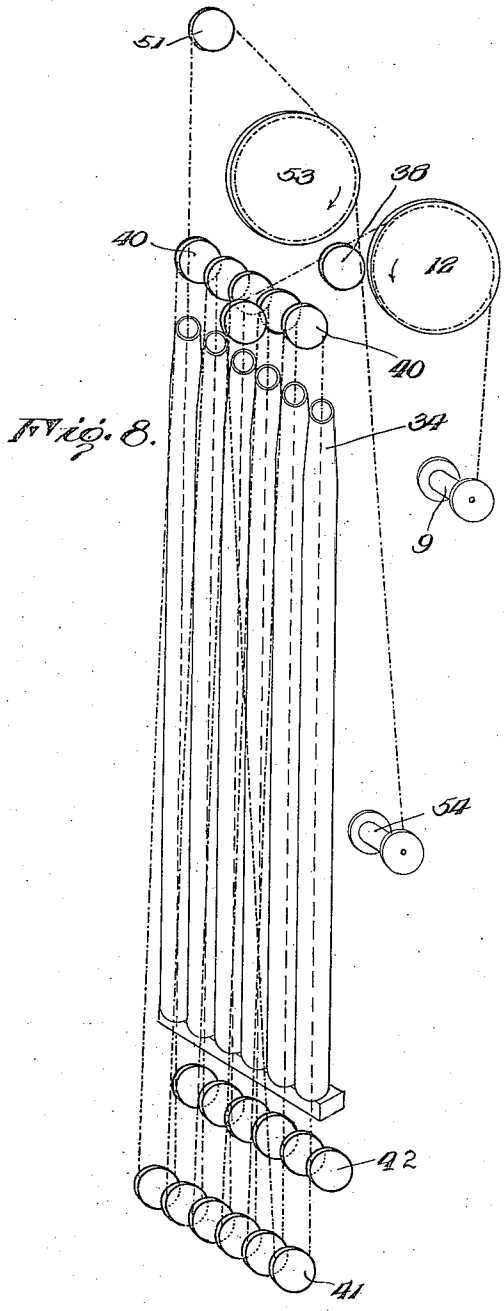

Fig. 8.

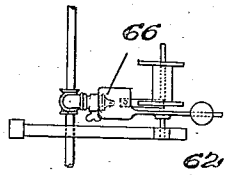

Fig. 10.

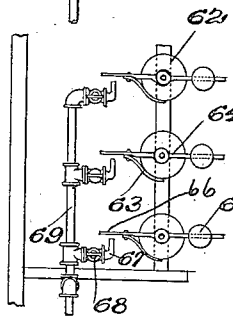

Fig. 9.

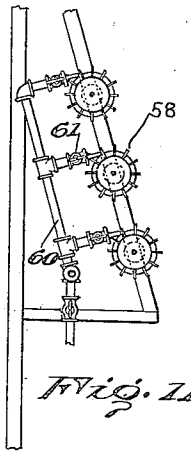

Fig. 11.

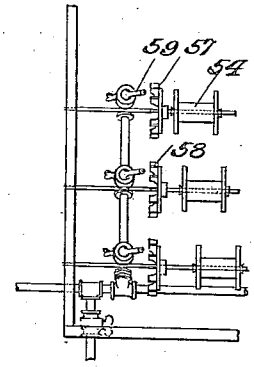

Fig. 12.

Inventor.
M. D. Shiverick.

by

Atty.

Patented Oct. 24, 1922. 1,432,795

UNITED STATES PATENT OFFICE.

MYRON D. SHIVERICK, OF ALBANY, NEW YORK, ASSIGNOR TO FINE WIRE INSULATING COMPANY, INC., OF ALBANY, NEW YORK, A CORPORATION OF NEW YORK.

MACHINE FOR APPLYING INSULATION IN LIQUID FORM TO WIRE.

Application filed April 14, 1920, Serial No. 373,889. Renewed August 3, 1922. Serial No. 579,550.

To all whom it may concern:

Be it known that I, MYRON D. SHIVERICK, a citizen of the United States of America, residing at Albany, in the county of Albany and State of New York, have invented certain new and useful Improvements in Machines for Applying Insulation in Liquid Form to Wire, of which the following is a specification.

This invention relates to machines for applying insulation in liquid form to wire and particularly to very fine wire, the wire with the applied insulation being passed successively through a series of ovens to harden the insulation.

In machines of this type, particularly with extremely fine wire it is important that the tension on the wire during the feeding thereof be more or less flexible in order to prevent breakage of the wire incident to speed increase of feeding wheels, also to prevent the wire becoming crossed at the turns in feeding direction. The present machine aims to obviate this difficulty by providing air pressure operated tensioning means to thereby maintain the desired tension under that degree of flexibility as well as compensate for the irregularities noted.

A further object of the invention is the provision of means for feeding the liquid insulation evenly and regularly on to the wire without retarding the feeding movement of the wire.

The invention further contemplates a series of individual ovens, with means for passing the wire successively through said ovens, provision being made for applying a desired quantity of liquid insulation to the wire immediately preceding its entry to each oven. The ovens are made up of an oven tube of considerable length and a hot tube arranged within the oven tube and at the entry end thereof. The fuel means is so directed and controlled that the flame is confined to the space between the hot tube and oven tube, with the result that the liquid insulation is first subject to heat of the hot tube and then to gradually reduced heat of the oven tube, the flame being prevented from direct contact with the wire.

The invention, shown in the preferred type of machine and involving two distinct units, each handling its own wire lengths, is illustrated in the accompanying drawings in which—

Fig. 1 is a side elevation of the improved machine.

Fig. 2 is a rear elevation thereof.

Fig. 3 is a side elevation of the machine, partly in vertical section.

Fig. 4 is a front elevation of the machine.

Fig. 5 is an enlarged broken vertical section of the machine.

Fig. 6 is a plan view illustrating partly the relation of the guide wheels and feed wheels.

Fig. 7 is a broken vertical section of the lower portion of the machine, showing more particularly the relative arrangement of the guide wheels, liquid insulation applying wheels, and the ovens.

Fig. 8 is a diagrammatic view illustrating the path of travel of a wire from the supply spool to the receiving spool.

Figs. 9 and 10 are details in elevation and plan respectively, showing the air pressure means for maintaining tension upon the supply spools.

Figs. 11 and 12 are details in side and front elevation respectively, illustrating the air pressure means for operating the receiving spools for the wire.

The improved machine is here shown as involving two units, each complete in itself and each involving, in addition to the cooperating parts, six ovens. As will be apparent from the following description it is contemplated to supply liquid insulation, ordinarily referred to as enamel, to a plurality of wires, three being shown, and to carry such wires through the successive steps necessary to apply the enamel in successive layers and to bake or harden, through the application of heat, each layer of enamel.

The machine as here shown comprises a frame 1, rising from or mounted on a suitable base 2, in which frame, adjacent the lower end thereof, is rotatably mounted what may be termed the main shaft 3. In enameling very fine wire it is important that the operating parts of the machine be driven with a smooth, easy running action as free from vibration as possible, and this result is sought in the present machine by driving the shaft 3 through the medium of a turbine 4, driven by compressed air from a

nozzle 5, fed from a suitable storage tank (not shown) through a supply pipe 6.

Rising from a lateral frame projection 6ª, near the upper end of the frame, is an upright 7, having lateral shafts 8, on which is adapted to be arranged the supply spools 9, three being shown, from which the wire is fed to the machine to be enameled or coated. A frame projection 10 is arranged adjacent the upper end of the main frame and supports shaft 11, on which, for each unit, there are arranged two feed wheels 12, peripherally grooved at 13 for the passage of the wires thereover from the supply spools with each wire in its own particular groove. The driving action of the feed wheels 12 is particularly important in order that a more or less flexible tension be maintained on the wire, and also that an absolutely accurate speed of such feed wheels be had in accordance with desired conditions. This necessitates the provision of means for adjusting the speed of such feed wheels and to secure this result the feed wheels shaft 11 is driven through co-operating beveled gears 14, from a shaft 15, which extends downwardly adjacent the free end of the frame projection 6. The lower end of the shaft is provided with a split belt wheel 16 the proximate faces of which converge toward each other from the peripheries of the sections. The lower section of such wheel 16 is secured upon a collar 17 which is adjustable longitudinally of the shaft 15, through a handle 18 threaded on the shaft 15. An upright shaft 19 is mounted in the frame and driven through beveled gearing 20 from the main shaft 3. The upper end of the shaft 19 is provided with a belt wheel 21 and a belt 22 engages the belt wheel 21 and a split belt wheel 16 on the shaft 15. It is obvious that by adjusting the sections of the split belt wheel 16 toward or from each other, the actual bearing diameter of that portion of the wheel engaged by the belt 22 may be changed at will to thereby govern at will the speed of the feed wheels 12. The belt 22 is maintained under proper tension for proper operation under the desired adjustment, through a tensioning means for the shaft mounting of shaft 15, such means comprising a tension element 23 involving in part a spring 24 and a connector 25, secured at its respective ends to the casing for shaft 15 and passing over a roller 26 at the end of frame projection 6. The belt 22 is thus maintained sufficiently taut for proper operation under all possible adjustments of the split belt wheel 16.

On the front of the main frame 1 approximately in line with the main shaft 3 is a support 27, on which is secured a rectangular fuel chamber 28. Sleeve like sections 29, hereinafter termed hot tubes, extend through the upper and lower walls of the fuel chamber 28, said hot tubes being thus open to the atmosphere at their lower ends. The hot tubes are preferably elliptical or oval in plan and the upper surface of the fuel chamber 28 is formed with a series of minute openings 30, encircling each tube. Fuel is supplied to the chamber 28 through a fuel supply pipe 31 leading from any suitable source and pivoted to its connection with fuel chamber leading into a mixer 32 to which compressed air is admitted from the supply pipe 6 through pipe 33. An oven tube 34 surrounds each hot tube above the fuel chamber, the lower ends of the oven tubes being slightly spaced from the upper wall of said fuel chamber. The oven tubes are of considerable length, extending some distance above the upper ends of the hot tubes and are preferably removably supported in main frame parts 35, the oven tubes are preferably divided longitudinally, with the respective sections arranged as shown, so that the outermost section may, if desired, be turned back to expose the interior of the tube. Furthermore, each tube is provided with a sight opening 36, preferably in line with the upper end of the hot tube therein, a slide 37 being arranged to cover such sight openings when necessary to seal the same openings, as well as the capabilities of the oven tubes for being opened, provides for the convenience and easy positioning of the wires within said oven in initially threading the wires therethrough for the enameling or insulator applying operation.

It may here be emphasized that a particular important detail of the operation of the machine in connection with the ovens, is that the fuel is so regulated that the flame does not extend above the upper ends of the hot tubes, but is confined to the space below the upper ends of said hot tubes and between said hot tubes and oven tubes. This, as will be plain from the path of travel of the wire as hereinafter pointed out, subjects the wire in its initial entry of the oven to the intense heat of the comparatively reduced area of the hot tube while at the same time preventing any contact of the flame with the wire or the enamel material thereon. Guide rollers 38 and 39, each with the appropriate number of wire grooves are mounted in laterally spaced relation above the ovens and are adapted to successively receive the wire from the feed wheels 12, the roller 39 being arranged in a plane rearwardly of the plane of the ovens, so that the initial wire lines depending from such roller 39 are wholly beyond and in rear of the oven. Successive sets of upper and lower guide rollers 40 and 41 are mounted on the main frame and on the base above and below the ovens, these guide rollers being arranged in vertical alignment with the ovens, and being so positioned and of such

diameter that the wire passing around said rollers will be directed centrally through the ovens on one side of the rollers and outside of the ovens from the other side, as will be apparent from Fig. 8. Arranged above the lower guide rollers 41 is a set of coating rollers 42, there being one such roller for each oven. These coating rollers are peripherally formed with a wire receiving grooves 43 and are mounted upon a shaft 44, supported in the main frame, and driven by chain and sprocket 45 from the main shaft 3. The shaft 44 is hollow and in open communication as by channels 46, with the wire groove of each roller as shown in Fig. 7. Enamel or other liquid insulating compound is fed to the hollow shaft through pipe 47 from a source of pressure support and through the channels 46 to the wire grooves of the coating rollers 42. As will be apparent from the drawings, that length of wire from each particular lower feed roller 41 which is designed to travel directly through the super-imposed oven, engages in its particular groove of the coating roller 42 aligned with that oven, so that through said engagement a desired quantity of enamel is supplied to the wire immediately preceding its entry into the oven. The excess enamel, if any, from the coating roller drops into a trough 48, arranged below and longitudinally of the roller 42 and inclining toward a receptacle 49, communicating with a pipe 50 whereby such excess enamel is collected for further use.

A return wire guide roller 51 is mounted on upright 52, rising from the upper portion of the frame 1, this roller 51, formed with wire grooves in appropriate number serving to receive the wire lengths following their final passage through the ovens and to direct them to a guide roller 53, loosely mounted upon shaft 11, and thence to receiving spools 54, supported in an auxiliary frame 55, secured to the main frame. The receiving spools may, if desired be driven through belt connection 56, one for each receiving spool, from the main shaft 3, and if so driven, it is important that such belt 56 be, what is known as spring belts and by reason of the constant tension of such character belt regardless of atmospheric conditions, or of the heat from the ovens and uniform, smooth, and highly desirable action is had in winding the wire upon the receiving spools.

In Figs. 11 and 12, however, there is shown the preferred means for driving the receiving spools, wherein 57 represents a driving wheel having a series of impact blades or vanes 58, and adjacent each wheel is arranged a nozzle 59, for delivering compressed air through a pipe 60, in communication with the supply pipe 6. Valves 61 control the pressure so that the respective receiving spools are thus driven by a steady constant power not subject to the variations incident to the usual mechanical drives.

In Figs. 9 and 10 there is shown a means for securing a flexible tension on the supply spools 9, to thereby prevent breakage of the wire due to the spool racing or the turns of the wire becoming crossed or from an unbalanced spool. As here shown the peripheral edge 62 of the disk end of the spool is provided with a spring strip 63 to bear thereon in the manner of a brake. The strip 63 is mounted upon an arm 64 rotatably supported on the spool shaft and weighted at 65 to insure a more or less constant bearing relation between the strip 63 and the edge 62. The end of the arm opposite the weight is enlarged to provide a vane 66, and an air nozzle 67, controlled by a valve 68 is adapted to direct more or less a constant air pressure against this vane, the nozzle being supplied through a pipe 69 communicating with the compressed air supply. By regulating the air pressure it is apparent that a flexible tensioning device is provided for the supply spools, and the latter may be thus held for that particular supply speed which will obviate the objections noted.

The path of travel of a single length of wire is clearly shown in Fig. 8 of the drawings, from which it will be noted that each wire is initially coated, to pass through the first oven, again coated, to pass through the second oven, and so on throughout the series. Provision is made for the simultaneous travel of three lengths of wire in the single operations, these respective wire lengths being maintained separated by the grooves in the spools, guide rollers, and the like, over which they pass.

Reference to Figs. 2 and 4, it will be noted that the machine here shown is made up to present two units, each involving six ovens, and each having its own cooperating parts as previously described. This tends to economy of operation, and of course simplifies the construction as compared with two independent machines each of a single unit.

What I claim is:—

1. In a wire enameling machine, a series of ovens, means for feeding the wire in succession therethrough, means for coating the wire with enamel, means for delivering compressed air to directly actuate said feeding means, and means operated by compressed air for tensioning the wire during the feeding operation.

2. In a wire enameling machine, a series of open flame ovens, means for protecting the wire from contact with the flame, enamel coating means arranged adjacent each oven, and means for feeding the wire in contact with the respective coating means and through the ovens in succession.

3. In a wire enameling machine, a series

of open flame ovens, means for protecting the wire from contact with the flame, enamel coating means for the wire, supply spools from which the wire is fed, receiving spools to which the wire is fed, and means for directing the wire into contact with the coating means and through the ovens in succession intermediate the supply spools and receiving spools.

4. In a wire enameling machine, a series of open flame ovens, means for protecting the wire from contact with the flame, enamel coating means for the wire, a series of guide rollers for directing the wire into contact with the coating means and through the ovens in succession, feeding spools for the wire and adustable means for regulating the speed of said spools.

5. In a wire enameling machine, a series of open flame ovens, means for protecting the wire from contact with the flame, a series of wire coating means, air driven feeding means for the wire to feed the wire into contact with the coating means and through the ovens successively, and manually operable means for adjusting the speed of said feeding means.

6. In a wire enameling machine, a series of ovens, supply spools from which the wire is fed, means for guiding the wire in succession through the ovens, means for coating the wire with the enamel, and air operated tensioning means for the supply spools.

7. In a wire enameling machine, a series of ovens, supply spools from which the wire is fed, means for guiding the wire through the ovens in succession, means for coating the wire with enamel immediately preceding its entry into a particular oven, a tension band for each supply spool, and regulatable air pressure means to maintain a desired pressure on said tension band.

8. In a wire enameling machine, a series of open flame ovens, means for protecting the wire from contact with the flame, supply spools from which the wire is fed, a series of guide rollers over which the wire is directed in succession in one direction beyond the ovens and in the other direction through the ovens, and a series of enamel and coating rollers with which the wire cooperates immediately preceding its entry into the oven.

9. In a wire enameling machine, a series of supply spools, an upper and lower series of guide rollers, each of said rollers being grooved to separately receive the wires from all supply spools, the respective guide rollers being arranged to direct the travel of the wires from the lower set to the upper set, enamel feeding rolls cooperating with the wires in such travel, means for feeding the enamel through said rolls and onto the wire and ovens through which the wires are directed in such travel.

10. In a wire enameling machine, a series of ovens, guide rollers for directing the travel of the wire through such ovens in succession, and an enamel feeding means comprising a hollow shaft through which enamel is fed, rollers fixed on said shaft with which the wire cooperates in its travel, said rollers being formed to direct the enamel from the hollow shaft to the periphery of the rollers.

11. In a wire enameling machine, an enamel feeding means comprising a hollow shaft, means for supplying enamel thereto, coating rollers secured upon the shaft and peripherally grooved to receive the wire, said rollers being formed to direct the enamel from the hollow shaft to the wire grooved therein.

12. In a wire enameling machine, an enamel feeding means comprising a hollow shaft, means for supplying enamel thereto, coating rollers secured upon the shaft and peripherally grooved to receive the wire, said rollers being formed to direct the enamel from the hollow shaft to the wire grooved therein, and means for collecting the excess enamel from said rollers.

13. In a wire enameling machine, a series of ovens, supply spools from which the wire is fed, means for guiding the wire in succession through said ovens, means for coating the wire with enamel during its travel, and receiving spools on which the enameled wire is stored, and means operated by compressed air for driving said receiving spools.

14. In a wire enameling machine, a series of ovens, supply spools from which the wire is fed, means for guiding the wire in succession through said ovens, means for coating the wire with enamel during its travel, receiving spools on which the enameled wire is stored, and means operated by compressed air for directly actuating said receiving spools.

15. In a wire enameling machine, a series of ovens, supply spools from which the wire is fed, means for guiding the wire in succession through the ovens, rotary means for coating the wire with the enamel, and air operated tensioning means for the supply spools.

16. In a wire enameling machine, a series of ovens, supply spools from which the wire is fed, means for guiding the wire in succession through the ovens, a rotary coating element around which the wire travels and through which the coating material is fed onto the wire, and an air operated tensioning means for the supply spools.

17. In a wire enameling machine, a series of ovens, supply spools from which the wire is fed, means for guiding the wire in succession through the ovens, a positively driven rotary coating element around which the

wire travels and through which the coating material is fed onto the wire, and an air operated tensioning means for the supply spools.

18. In a wire enameling machine, a series of ovens, supply spools from which the wire is fed, means for guiding the wire in succession through the ovens, rotary means for coating the wire with the enamel, said rotary means serving as the lower guiding means for the wire, and an air operated tensioning means for the supply spools.

In testimony whereof I affix my signature.

MYRON D. SHIVERICK.