June 27, 1967 R. D. ALLISON ETAL 3,327,927

CONTINUOUS ENVELOPE ASSEMBLY

Filed April 1, 1965 3 Sheets-Sheet 1

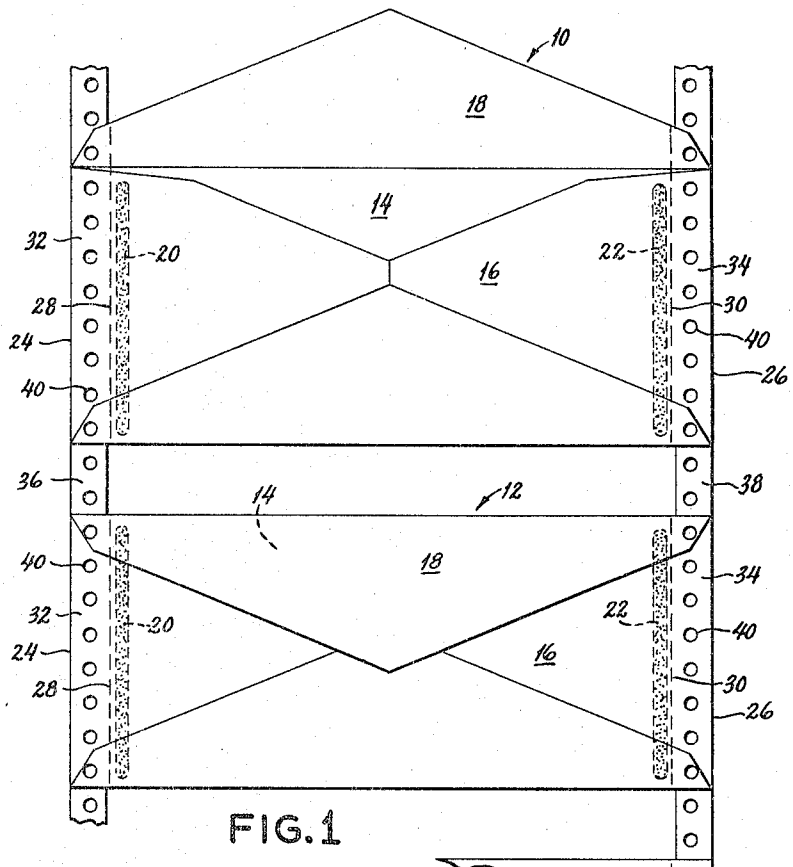

FIG. 1

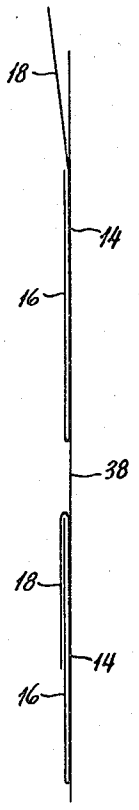

FIG. 2

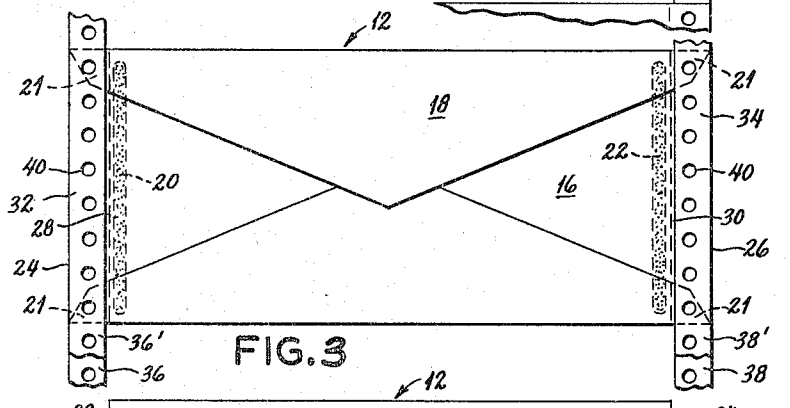

FIG. 3

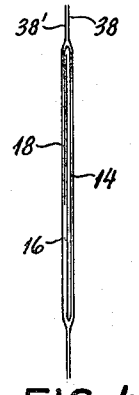

FIG. 4

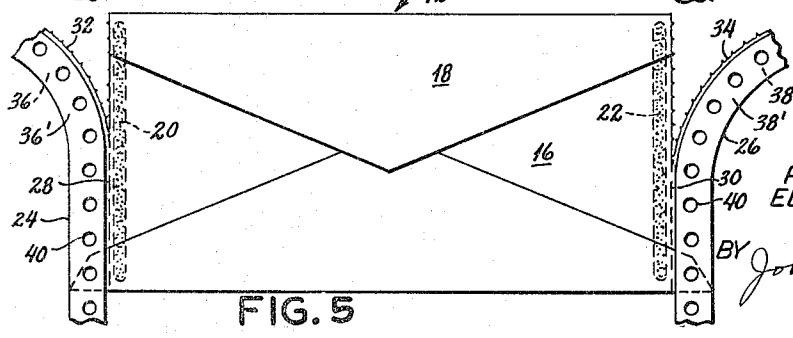

FIG. 5

INVENTORS
ROBERT D. ALLISON
EDWARD P. GORMLEY
BY John J. Stevens
AGENT

June 27, 1967 R. D. ALLISON ETAL 3,327,927

CONTINUOUS ENVELOPE ASSEMBLY

Filed April 1, 1965 3 Sheets-Sheet 2

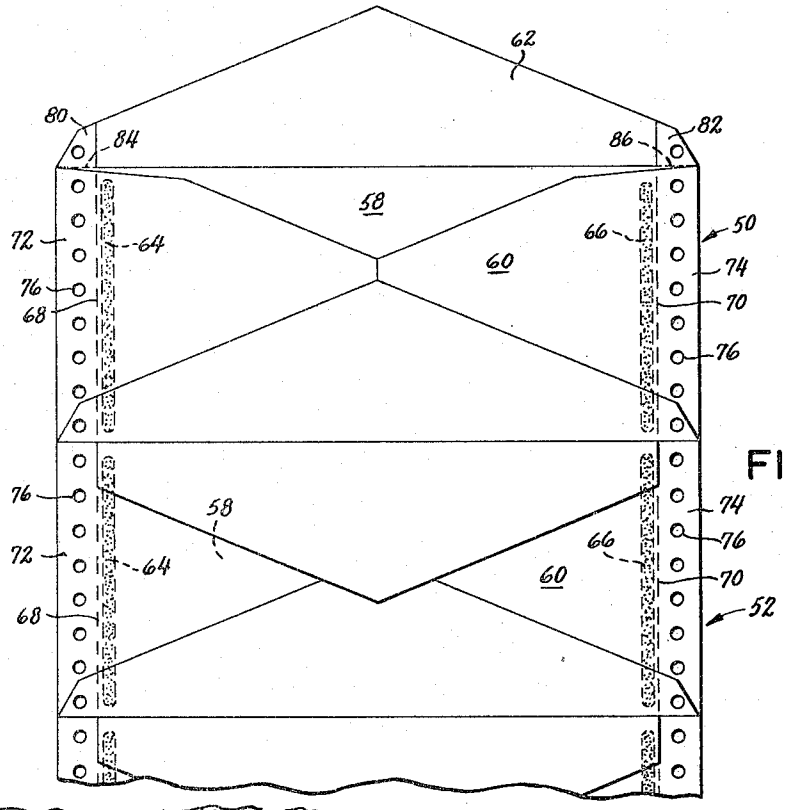

FIG. 6

FIG. 7

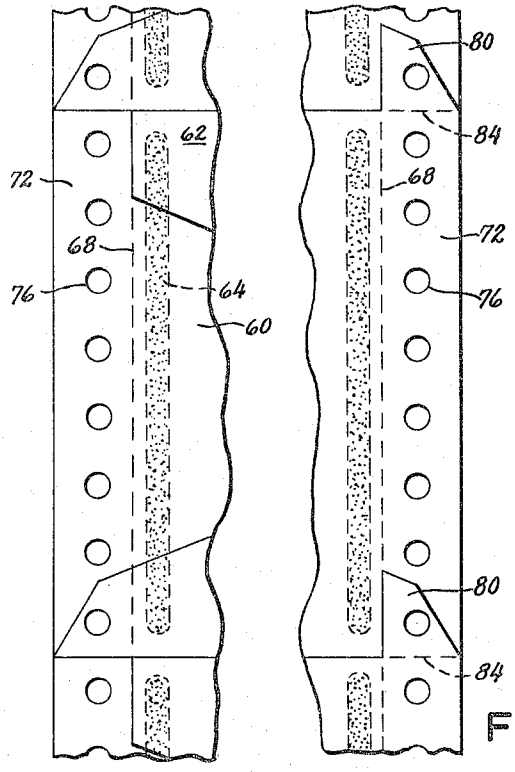

FIG. 8

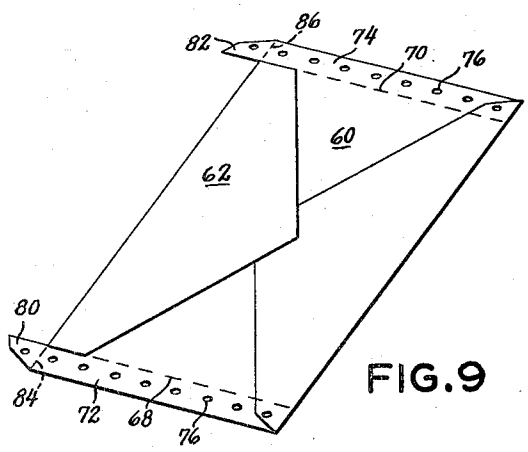

FIG. 9

June 27, 1967 R. D. ALLISON ETAL 3,327,927

CONTINUOUS ENVELOPE ASSEMBLY

Filed April 1, 1965 3 Sheets-Sheet 3

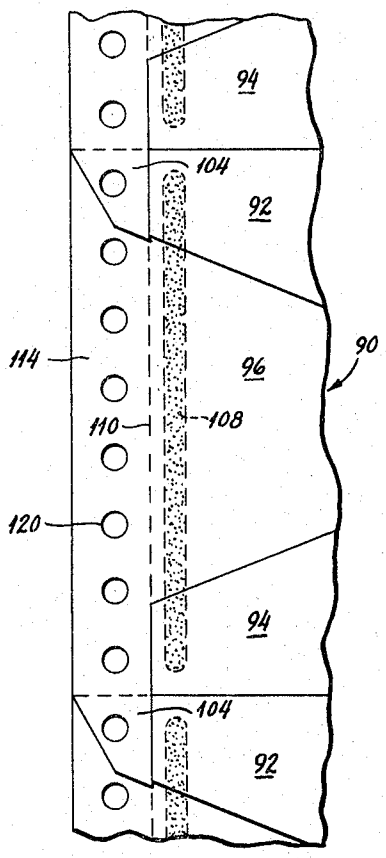

FIG.10

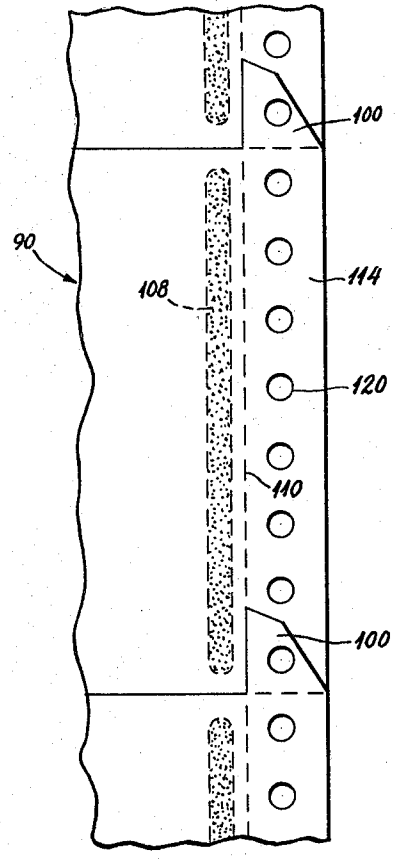

FIG.11

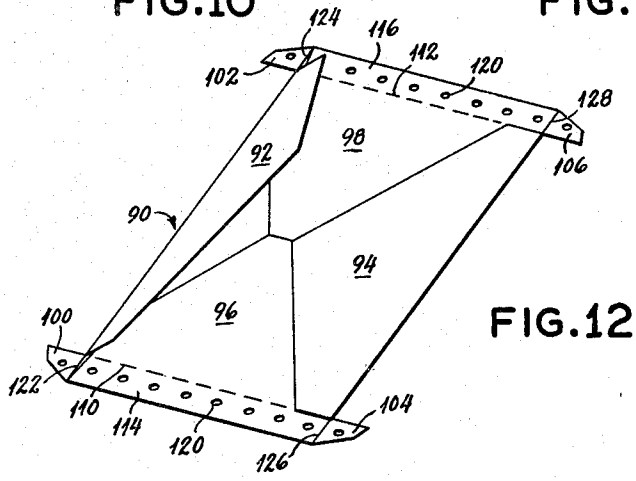

FIG.12

United States Patent Office 3,327,927 Patented June 27, 1967

3,327,927

CONTINUOUS ENVELOPE ASSEMBLY

Robert D. Allison, 140 Garfield Road, West Hartford, Conn. 06107, and Edward P. Gormley, 5231 Circle Downs, Minneapolis, Minn. 55416

Filed Apr. 1, 1965, Ser. No. 444,689
7 Claims. (Cl. 229—69)

This invention relates in general to envelopes, and more specifically to a series or assembly of envelopes connected together for use in business machines whereby addressing, printing or other operations may be performed thereon.

This invention provides an assembly for the continuous feeding of envelopes into business machines provided with feeding devices such as pin wheels for advancing the envelopes through the machine. In such machines, the continuous assembly of envelopes is generally withdrawn from a supply source, fed into the machine where the address, etc., is printed on the envelopes and finally, the assembly is broken up into individual envelopes for mailing.

An object of this invention is to arrange envelopes in an assembly so they may be fed positively, consecutively, and in alignment into the business machine.

Another object of this invention is to provide an assembly of interconnected envelopes that may be successively fed into a businses machine, and after being removed therefrom, separated from the remaining part of the assembly.

Another object of this invention is to provide an assembly of continuous envelopes in which conventional, diagonal seam style envelopes may be used therein.

A further object of the invention is to provide an assembly of continuous envelopes in which the connected marginal portions of the envelopes may be removed when the individual envelopes are separated from the assembly, and the resulting individual envelopes are closed at their lateral side edges. Furtherfore, this may be accomplished with conventional diagonal seam envelopes.

According to the invention, conventional envelopes, which may be of the well-known and familiar diagonal-seam style, are adapted for use in the present invention by providing connection means between the front and back panels of the envelopes spaced a short distance inward from the side edges of the envelopes, such as by an adhesive to, in effect, provide false sides for the envelopes. Also, slightly outward from the false sides, lines of perforations are provided in substantially parallel relation with the sides of the envelopes, forming marginal portions which may be removed along the lines of perforations to leave a residual shorter, but complete, envelope. The marginal portions of each envelope are connected to similar marginal portions of other envelopes and pin feeding holes may be punched through the marginal portions for feeding purposes. According to this invention, the marginal portions may be connected to carrier strips, or, if desired, the marginal portions of adjacent envelopes may be connected by means of tabs extending from the marginal portions.

The above and many other objects and advantageous features of this invention will appear more fully hereinafter, reference being made to the accompanying drawings in which:

FIGURE 1 is a plan view of several envelopes in the assembly;

FIGURE 2 is a side or edge view of the assembly shown in FIGURE 1;

FIGURE 3 is a modification of the invention, showing only one envelope of the assembly;

FIGURE 4 is a side or edge view of that shown in FIGURE 3;

FIGURE 5 is a plan view of a single envelope of the assembly, illustrating how an envelope is separated from the assembly.

FIGURE 6 is a plan view of several envelopes in a modified form of the invention;

FIGURE 7 is an enlarged partial plan view of the envelopes shown in FIGURE 6, showing the back walls of the envelopes;

FIGURE 8 is an enlarged partial plan view of the envelopes shown in FIGURE 6, showing the front walls of the envelopes;

FIGURE 9 is a perspective view of an envelope used in making an assembly such as shown in FIGURES 6–8 inclusive;

FIGURE 10 is a view similar to FIGURE 7, but showing a slightly different form of the invention;

FIGURE 11 is a view similar to FIGURE 8, but showing the same form of the invention as FIGURE 10; and

FIGURE 12 is perspective view of an envelope used in making an assembly such as that shown in FIGURES 10 and 11.

Referring to the drawings, in FIGURES 1 and 2 there are shown envelopes **10** and **12** of the familiar diagonal seam style, each having a front wall **14** and a back wall **16**, secured together along three edges by boundary folds of the envelope material. Each of the envelopes **10** and **12** also have a sealing flap **18** for sealing to the back wall **16** after the contents have been inserted. The upper envelope in FIGURE 1 is shown flap-extended for purposes of illustration only.

To adapt conventional style envelopes for use in this invention, the front and back walls **14** and **16** thereof are connected substantially along the lines **20** and **22**, to form, in effect, false sides, by any appropriate means, such as by heat sealing, adhesive strips, etc. The lines **20** and **22** are preferably generally parallel to the side edges **24** and **26** of the envelopes, and need not be continuous as shown, but may be a series of connections.

The weakened lines **28** and **30** positioned just outside the lines of connection **20** and **22** provide means for removing the marginal portions **32** and **34** from the envelopes. The weakened lines **28** and **30** may conveniently be lines of perforations, and they divide the envelopes **10** and **12** from the marginal portions **32** and **34** which are connected to the carrier strips **36** and **38**. Preferably, the marginal portions **32** and **34** are approximately the width of the carrier strips **36** and **38**, and the weakened lines **28** and **30** lie at the inside edge of the carrier strips **36** and **38**, respectively. The pin holes **40** in the carrier strips **36** and **38**, and the marginal areas **32** and **34**, are in alignment and are preferably punched simultaneously.

The carrier strips **36** and **38** may be connected to the marginal portions **32** and **34** by any convenient means, such as by a suitable adhesive. In FIGURES 1 and 2, the carrier strips are shown attached to the front walls **14** of the envelopes; however, they may be connected to the back walls **16** is desired. Also, the envelopes may be connected by two pairs of carrier strips **36**, **36'**, **38**, and **38'**, on opposite sides of the envelopes as shown in FIGURES 3 and 4. This arrangement would obviously provide a stronger assembly. Other than having two carrier strips at each edge instead of one, the embodiment shown in FIGURES 3 and 4 could be constructed in a manner similar to that shown in FIGURES 1 and 2. The two carrier strips **36** and **36'** in addition to comprising two separate strips may also be made of a single strip folded longitudinally along its center, the two leaves of the folded strip thereby forming the two strips **36** and **36'** and receiving therebetween the associated marginal portions **32** of the envelopes. Likewise the two other carrier strips **38** and **38'** may also be made from a single folded strip. If

desired, the sealing flap 18 may be slit along the weakened lines 28 and 30 so as to allow the flap 18 to be opened without tearing along the weakened lines 28 and 30. Also, if desired, the envelopes may be manufactured without the tab portion 21 of the sealing flap 18 and the bottom flap 23.

In FIGURE 5, the envelope 12 is partially separated from the carrier strips 36, 36', 38, and 38' and the marginal portions 32 and 34 of the envelope along the lines of perforations 28 and 30. Separation may be easily attained by pulling the strips 36, 36', 38, 38', away from the envelopes. The envelope 12 is closed at the side edges by the lines of connection 20 and 22 between the front and back walls.

FIGURES 6–10 inclusive illustrate another embodiment of the invention in which the marginal portions of the envelopes are connected not by separate carrier strips as hereinbefore described, but by extended tabs of the marginal portions. FIGURE 6 shows generally the layout of such an arrangement; however, the partial plan views of FIGURES 7–10 inclusive show in greater detail how the envelopes are connected.

Referring first to FIGURES 6–9 inclusive, envelopes 50 and 52 are connected, edge to edge, by means of tabs (see FIGURE 8). Here, as previously described with reference to FIGURES 1–5 inclusive, each envelope is provided with a front wall 58 and a back wall 60 secured together along three edges by boundary folds of the envelope material, and sealing flaps 62. The front and back walls 58 and 60 respectively are also connected substantially along lines 64 and 66 to form false sides, and the weakened lines 68 and 70 are provided for separating the marginal portions 72 and 74 from the envelopes. Pin feeding holes 76 are also provided as before.

The back walls 60 are made up of four generally triangular flaps, three of which are connected together to form a pocket, and the fourth of which is used as a closing and sealing flap. The marginal areas 72 and 74, on the back walls, contain corners of the closing flap 62 which are conveniently used as tabs for connecting the envelopes together. As shown best in FIGURES 7, 8 and 9, the tabs 80 and 82 are completely severed from the closing flap 62 along lines substantially in alignment with the lines of weakening 68 and 70, and are hingedly connected to the front wall 58 along the fold lines 84 and 86. The tabs 80 and 82 are free to fold along these lines independently of the closing flap 62, and the lines 84 and 86 are preferably weakened, as by perforations, to enable the tabs 80 and 82 to be easily separated from the envelope from which they extend. These tabs 80 and 82 perferably remain extended as shown in FIGURE 9 instead of being folded flat against the back panel like the closing flap 62, and then they are connected, as by a suitable adhesive, to the marginal portions 72 and 74 respectively, of the adjacent envelope, as best shown in FIGURES 7 and 8.

When the tabs 80 and 82 are connected to the front panels 58 by weakened lines 84 and 86, the envelopes may be removed from the assembly by first pulling them apart at the lines 84 and 86, and subsequently removing the marginal portions 72 and 74. Also, if desired, the marginal portions 72 and 74 may be removed without first severing the tabs from the envelope from which they extend.

In FIGURES 10–12 inclusive, there is shown a form of the invention in which tabs extend from both the top and bottom edges of the envelopes, instead of only one edge as shown in FIGURES 6–9 inclusive. In the embodiment shown in FIGURES 10–12 inclusive, there would then be four tabs connecting adjacent envelopes, which obviously makes a stronger assembly. Envelope 90 is provided with a sealing flap 92 and a bottom flap 94 connected to side flaps 96 and 98. As hereinbefore described, the tabs 100 and 102 are severed from the closing flap 92 and remain extended for connection to another envelope. In a similar manner, tabs 104 and 106 are severed portions of the bottom flap 94, and also remain extended for connection to another envelope. The false sides to the envelopes are provided by the connection line 108 (the other side not being shown), and the weakened lines 110 and 112 are provided as hereinbefore described for removing the marginal portions 114 and 116 from envelope 90.

As best shown in FIGURES 10 and 11, the tabs 100 and 104 are attached to the marginal areas of the adjacent envelope. Thus, the connected marginal portions 114 and 116 become carrier members for feeding the envelopes in continuous form by means of the pin feeding holes 120. The marginal portions 114 and 116 may then be removed as hereinbefore described. If desired, the tabs 100, 102, 104 and 106 may be connected to the body of the envelope 90 by weakened lines 122, 124, 126, and 128 to facilitate separating the envelopes.

It will be understood that various changes in the details, materials, steps, and arrangements of parts, which have been herein described and illustrated in order to explain the nature of the invention, may be made by those skilled in the art within the scope of the invention as expressed in the appended claims.

We claim:

1. An envelope assembly for use in business machines provided with means for advancing the envelopes through the machine, said assembly comprising a plurality of envelopes and two carrier strips, each of said envelopes having a front wall, a back wall, and opposite marginal side portions connected with a carrier strip, said envelopes having lines of perforations inside of said marginal portions thereof and strips of adhesive substantially parallel to and inside of said perforated lines connecting the front and back walls of said envelopes together, whereby said marginal portions may be detached from said envelopes along with said carrier strips to leave complete, individual envelopes, one of said carrier strips being connected to the front walls of said envelopes, and the other of said carrier strips being connected to the back walls of said envelopes.

2. An envelope assembly for use in business machines provided with feeding means for advancing the envelopes through the machine, said assembly comprising a plurality of envelopes and two carrier strips, each of said envelopes having a front wall, a back wall, and opposite marginal side portions connected with a carrier strip, said envelopes having lines of perforations inside of said marginal portions thereof and strips of adhesive substantially parallel to and inside of said perforated lines connecting the front and back walls of said envelopes together, whereby said marginal portions may be detached from the envelopes along with said carrier strips to leave complete, individual envelopes, said carrier strips being folded longitudinally substantially along their centers and containing the marginal portions of the envelopes within their folds.

3. An envelope assembly for use in business machines provided with feeding means for advancing the envelopes through the machine, said assembly comprising a plurality of envelopes each made of a single folded piece of sheet material and each having a front wall and a back wall secured together along the two side edges and bottom edge thereof by boundary folds, each of said envelopes adjacent its two side edges having two marginal portions each separated from the body of the envelope by a weakened line running generally parallel to the associated side edge and inwardly of both of said weakened lines having means connecting said front and back walls thereof together so as to maintain said front and back walls closed relative to one another along the two sides of said envelope after said marginal portions are detached therefrom, said envelopes being arranged in a series with their marginal portions aligned with one another to form one set of aligned marginal portions on one side of said series and another set of aligned marginal portions on

the other side of said series, and means for connecting said marginal portions of each set to one another to hold said envelopes in their serial arrangement, said connecting means being located in their entirety outwardly from the associated weakened lines of said envelopes so that by tearing along said weakened lines both said marginal portions and the associated connecting means may be removed from said envelopes.

4. An envelope assembly as defined in claim 3 further characterized by said connecting means comprising two carrier strips each made from a piece of sheet material separate from said envelopes, each of said carrier strips extending along a respective one of said sets of marginal portions and being fixed to each of the associated marginal portions, each of said carrier strips being located in its entirety outwardly from the associated weakened line of said envelopes.

5. An envelope assembly as defined in claim 3 further characterized by each of said envelopes including a sealing flap connected with the front wall thereof by a boundary fold extending along the envelope's top edge, said connecting means comprising two tabs on each envelope cut from the opposite ends of the sealing flap of said envelope and extending upwardly beyond the top edge thereof, and means fixing each of said tabs to the associated marginal portion of the adjacent envelope of said series.

6. An envelope assembly as defined in claim 3 further characterized by the back wall of each of said envelopes being comprised in part of a bottom flap connected with said front wall of said envelope by a boundary fold at the bottom thereof, said connecting means comprising two tabs on each envelope each cut from the opposite ends

of the associated bottom flap and extending downwardly beyond the bottom boundary fold of the envelope, and means fixing each of said tabs to the associated marginal portion of the adjacent envelope of said series.

7. An envelope assembly as defined in claim 3 further characterized by each of said envelopes including a sealing flap connected with the front wall thereof by a boundary fold extending along the envelope's top edge and a bottom flap connected with the front wall thereof by a boundary fold extending along the envelope's bottom edge, said connecting means comprising two tabs cut from the opposite ends of said sealing flap of each envelope and extending upwardly beyond the top edge of the envelope and two tabs cut from the opposite ends of the bottom flap of each envelope and extending downwardly beyond the bottom boundary edge of the envelope, and means fixing said tabs to the associated marginal portions of the adjacent envelopes of said series.

References Cited

UNITED STATES PATENTS

2,013,844	9/1935	Sherman	229—69
2,338,922	1/1944	Fleming	229—69
2,895,534	7/1959	Steidinger	229—69
3,140,816	7/1964	Schultz	229—69
3,208,662	9/1965	Johnson	229—69
3,219,258	11/1965	Reuter	229—69

JOSEPH R. LECLAIR, *Primary Examiner.*

D. T. MOORHEAD, *Assistant Examiner.*