United States Patent [19]

Reddy

[11] **3,800,750**

[45] **Apr. 2, 1974**

[54] **METHOD AND APPARATUS FOR PROVIDING A NONLINEAR PRESSURE TRANSDUCER OUTPUT SIGNAL**

[75] Inventor: **Junuthula N. Reddy**, Horseheads, N.Y.

[73] Assignee: **The Bendix Corporation**, Southfield, Mich.

[22] Filed: **Aug. 10, 1971**

[21] Appl. No.: **170,564**

[52] **U.S. Cl.**.... **123/32 EA**, 123/119 R, 123/140 MP

[51] **Int. Cl.**..... **F02m 51/00**

[58] **Field of Search**..... 123/32 E A, 119

[56] **References Cited**

UNITED STATES PATENTS

3,425,401	2/1969	Lang	123/32 EA
3,430,616	3/1969	Glockler et al	123/32 EA
3,612,008	10/1971	Beishir	123/32 EA
3,651,791	3/1972	Kobayashi	123/32 EA
3,610,212	10/1971	Endo	123/32 EA
3,543,734	12/1970	Mair	123/32 EA
3,526,212	1/1968	Bassot	123/32 EA
3,407,793	10/1968	Lang	123/32 EA
3,692,003	9/1972	Wakamatsu	123/32 EA

Primary Examiner—Laurence M. Goodridge
Assistant Examiner—Cort Flint
Attorney, Agent, or Firm—Gerald K. Flagg

[57] **ABSTRACT**

By deriving a substantially linear voltage signal from a pressure transducer and using that signal to control a plurality of current sources and current sinks, the controlled currents generated thereby may be passed through a resistance of known value to produce a usable output signal having a nonlinear relationship with respect to the pressure sensed by the transducer. If current sources to be controlled are designated by N, the resultant curve can have N-1 breakpoints where the slope of the curve of output voltage with respect to sensed pressure changes. By controlling a plurality of current sources which are active for all values of sensed pressure, the slope of the resultant curve can change from positive to negative values and back again.

4 Claims, 5 Drawing Figures

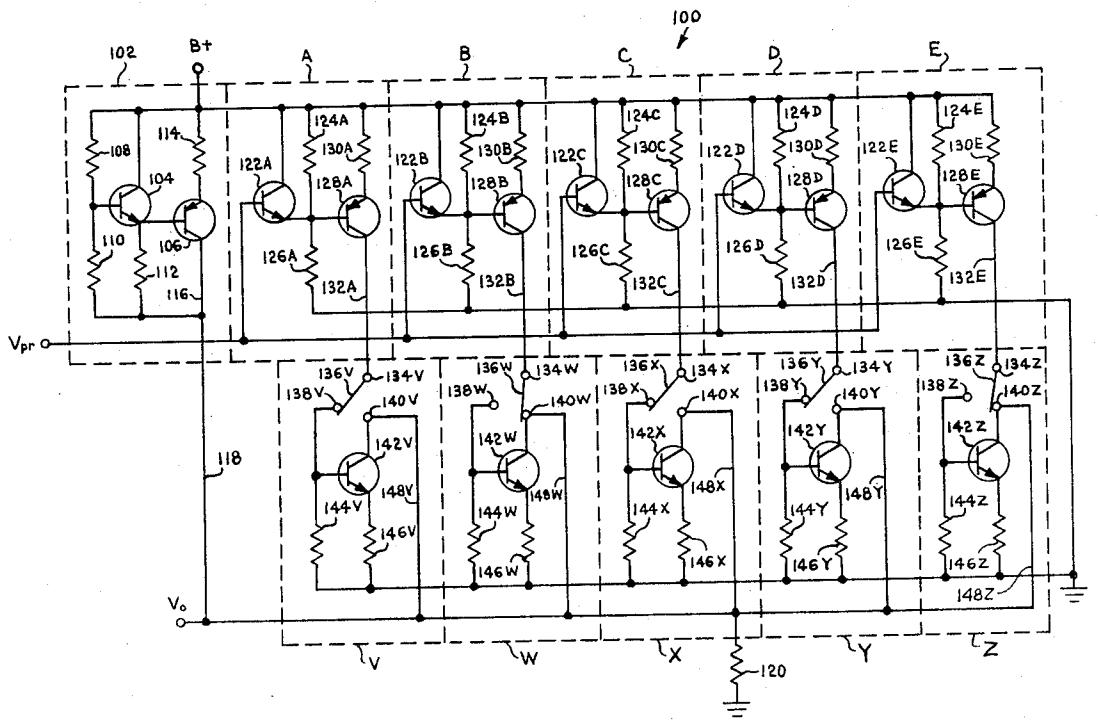

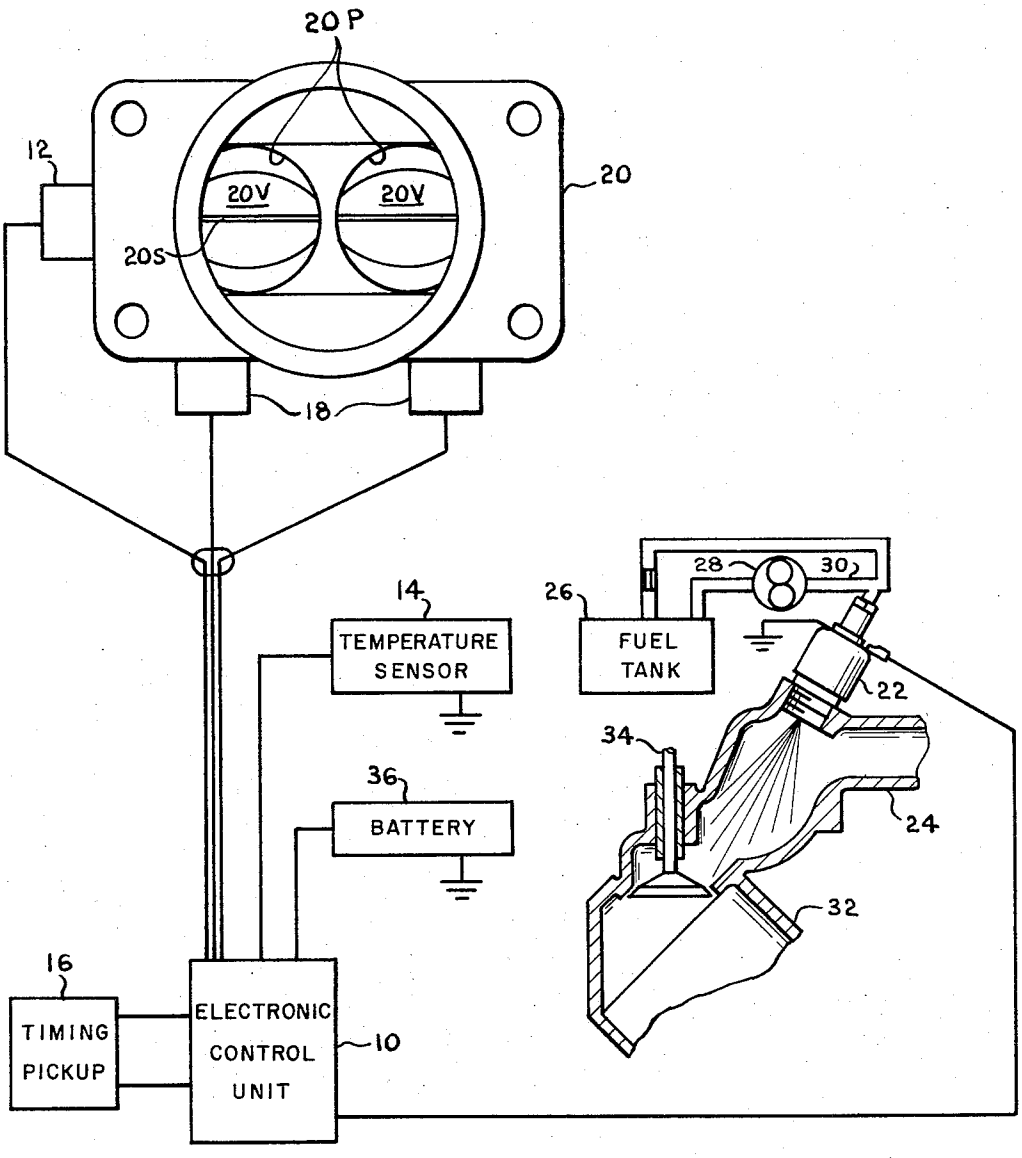

FIGURE 1

JUNUTHULA N. REDDY
INVENTOR.

BY

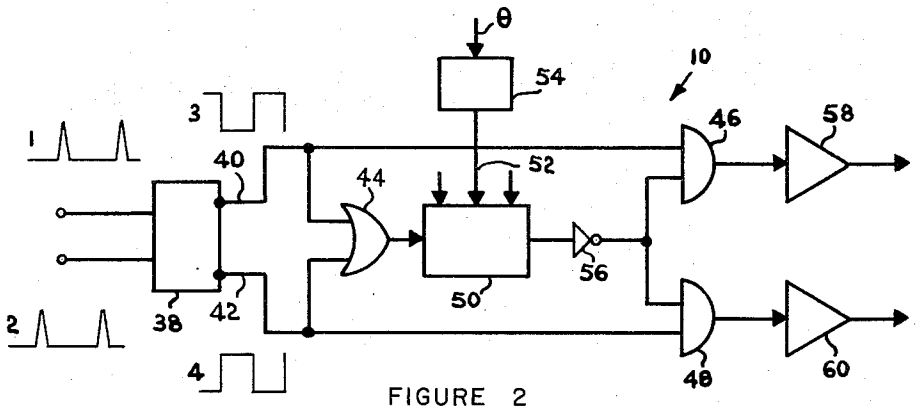

FIGURE 2

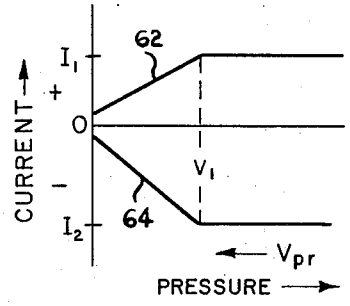

FIGURE 4

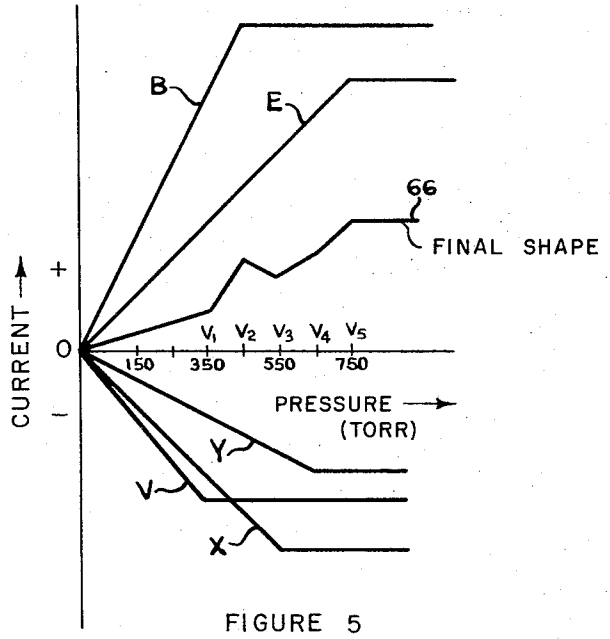

FIGURE 5

JUNUTHULA N. REDDY
INVENTOR.

BY

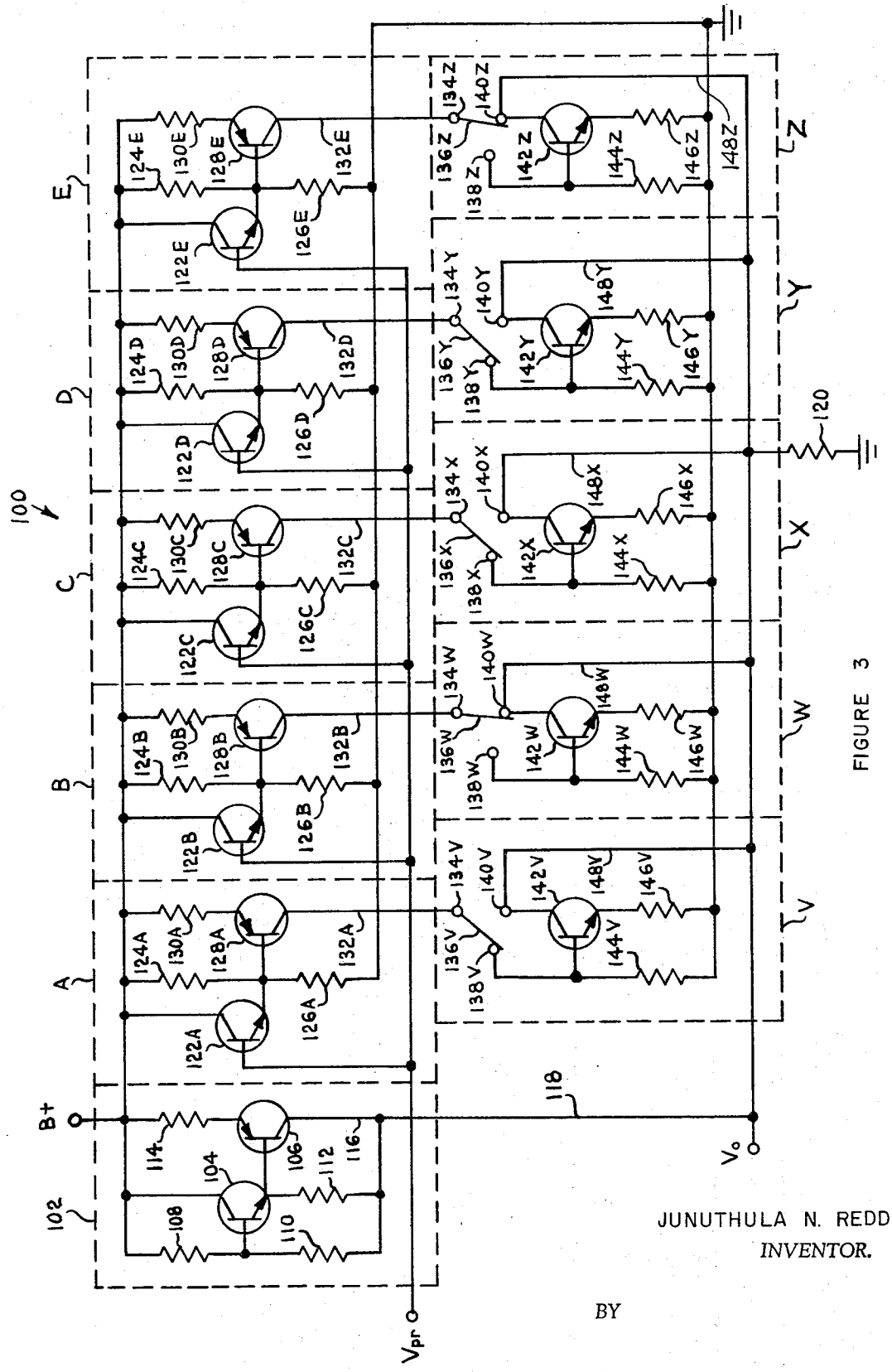

FIGURE 3

JUNUTHULA N. REDDY
INVENTOR.

BY

METHOD AND APPARATUS FOR PROVIDING A NONLINEAR PRESSURE TRANSDUCER OUTPUT SIGNAL

CROSS-REFERENCE TO RELATED APPLICATIONS

The instant application is related to commonly assigned copending applications bearing U.S. Ser. No. 170,565 now U.S. Pat. No. 3,765,380 entitled "Electronic Fuel Control System With Non-linearizing Means Interconnecting the Pressure Transducer with the Main Computation Means" by Todd L. Rachel and to my commonly assigned copending application bearing U.S. Ser. No. 384,481 and titled "Apparatus and Method for Providing a Nonlinear Pressure Transducer Output Signal".

BACKGROUND OF THE INVENTION

1. Field of the Invention

The present invention relates to the field of electronic fuel control systems for reciprocating piston internal combustion engines where the consumption of air by the engine constitutes an input parameter for the electronic fuel control system. More particularly, the present invention relates to that portion of the above described field in which the pressure of the air in the intake manifold is used as prime input paramater to determine the instantaneous fuel requirements for the associated engine. Specifically, the present invention relates to means for providing an electrical signal indicative of sensed pressure and representative of engine fuel requirements.

2. Description of the Prior Art

The prior art teaches that in electronic fuel control systems for reciprocating piston internal combustion engines, various devices may be used to generate an electrical or electronic analog of the air pressure in the intake manifold of the engine. Such devices include inductive pressure transducers with an aneroid controlled movable core, capacitive pressure transducers with an aneroid controlled movable capacitive plate relationship and aneroid controlled rheostats or potentiometers. However, it is known that reciprocating piston internal combustion engines have a fuel requirement which does not relate in a linear fashion to the air pressure in the engine intake manifold. As a consequence, it has been necessary for the fuel control system designers to determine empirically the shape of the fuel requirement curve as a function of air pressure for a given engine and to thereafter suitably adapt or modify one of the known pressure sensors to satisfy the empirically determined curve. Such solutions are complicated and expensive to implement since they require a nonlinear movement or irregularly shaped or formed electrical members. It is, therefore, an object of the present invention to provide a circuit for interfacing between a known pressure sensor of simple and inexpensive construction and the main computing means to provide a suitably shaped curve of output signal characteristic with respect to intake manifold air pressure which curve closely matches the curve of fuel requirement with respect to intake manifold air pressure. Since such curves may be expected to change slope frequently and to go from positive to negative slopes, it is a further object of the present invention to provide such an interfacing circuit as may produce an output signal characteristic which changes slope frequently and which may go from negative to positive or from positive to negative slopes. Keeping the above objects in mind, it is a specific object of the present invention to provide an active circuit capable of satisfying the above enumerated objects.

As the art of electronics becomes more and more sophisticated, the cost of sensors required to produce an output which is nonlinearly related to input will begin to represent a more substantial percentage of the cost of the total system than is currently the case. It is, therefore, an object of the present invention to provide an electronic means to interface between a pressure transducer having a substantially linear response with response to variations in air pressure which circuitry may be fabricated in accord with the state of the art of electronics to suitably nonlinearize the electrical signal produced by the pressure transducer.

The devices currently available in the prior art are furthermore handicapped in that they can only provide a very rough approximation to the desired electrical output for various air pressure inputs. It is, therefore, a further object of the present invention to provide an electronic interfacing network for coupling a resistive aneroid type pressure transducer to the main computing portion of an electronic fuel control system capable of providing an electrical response which is nonlinear with respect to variations in the air pressure in the intake manifold. It is a more specific object of the present invention to provide such an interfacing network capable of providing an output electrical voltage curve having a plurality of points at which the slope of the curve may change. It is a still more specific object of the present invention to provide an active electronic interfacing network which produces a voltage output signal which is nonlinearly related to a voltage input signal having a substantially linear relationship with respect to variations in air pressure in the intake manifold of the associated engine. It is a specific object of the present invention to provide an electronic interfacing network comprised of a plurality of current generating means which may be simultaneously controlled to provide, at a reference location, an electrical current having a magnitude which is a nonlinear function of air pressure in the intake manifold.

One proposed solution to the above-noted problem having sequentially controlled variable current generating means has required a large number of active solid state devices and has required information feedback (or precisely sized components) to match operational characteristics of successively variably operated current generating means. This had the disadvantages incident to increased complexity and the statistical unreliability associated with large numbers of active devices. It is a still further object of the present invention to provide a nonlinearizing circuit capable of producing an output response curve capable of smooth or abrupt transitions in slope and capable of both positive and negative slopes.

SUMMARY OF THE PRESENT INVENTION

The present invention contemplates generating a voltage signal which is approximately linearly related to the pressure in the air intake manifold and using this signal to control a plurality of current generating means which are arranged to be variably operative over overlapping selected ranges of air intake manifold pressure.

The present invention further contemplates combining the currents generated thereby into a single current which is dissipated through a fixed resistor wherein the voltage drop across the fixed resistor constitutes the output signal.

An additional aspect of the present invention resides in the provision of at least one current sink means to provide an additional source of variation in the current to be dissipated by the fixed resistance.

BRIEF DESCRIPTION OF THE DRAWING

FIG. 1 shows a schematic diagram of an electronic fuel control system which may utilize the present invention.

FIG. 2 shows a block diagram representation of the electronic control unit of FIG. 1.

FIG. 3 shows a schematic diagram of a preferred embodiment of a transducer nonlinearizing circuit according to the present invention.

FIG. 4 shows a graph representative of current generated in response to variations in the pressure in the intake manifold and including a graph illustrative of current variation when a current sink is activated.

FIG. 5 shows a graph of currents generated by selected sources and currents dissipated by selected sinks for variations in intake manifold air pressure and a composite resultant curve.

DETAILED DESCRIPTION OF THE DRAWINGS

Referring now to FIG. 1, an electronic fuel control system is shown in schematic form. The system is comprised of a main coupling means or electronic control unit **10**, a manifold pressure sensor **12**, a temperature sensor **14**, an input timing means **16** and various other sensors denoted as **18**. The manifold pressure sensor **12** and the associated other sensors **18** are mounted on throttle body **20**. Throttle body **20** includes throttle valves **20V** operative to control the flow of air within throttle body passages **20***p*. Pressure sensor **12** may, for instance, be a potentiometer whose slider member is coupled to the throttle shaft **20***s* so that output thereof is a function of throttle angle, θ. The output of the computing means **10** is coupled to an electromagnetic injector valve member **22** mounted in intake manifold **24** and arranged to provide fuel from tank **26** via pumping means **28** and suitable fuel conduits **30** for delivery to a combustion cylinder **32** of an internal combustion engine otherwise not shown. While the injector valve member **22** is illustrated as delivering a spray of fuel towards an open intake valve **34**, it will be understood that this representation is merely illustrative and that other delivery arrangements are known and utilized. Furthermore, it is well known in the art of electronic fuel control systems that computing means **10** may control an injector valve means comprised of one or more injector valve members **22** arranged to be actuated singly or in groups of varying numbers in a sequential fashion as well as simultaneously. The computing means is shown as energized by battery **36** which could be a vehicle battery and/or battery charging system as well as a separate battery.

The logic diagram shown in FIG. 2 illustrates the computing means **10** in a non-particularized manner as applied to two-group injection. In FIG. 2, there is shown a switching device **38** capable of producing alternating output signals and receiving as input a signal or signals representative of engine crank angle as from sensor **16**. Mechanically, sensor **16** could be a single lobed cam, driven by the engine and alternately opening and closing a pair of contacts. Since this arrangement could generate spurious signals, as by contact bounce, the switching device **38** will be described and discussed as a flip flop since the flip flop is known to produce a substantially constant level of output at one output location and zero level at the other output location in response to a triggering signal which need only be a spike input but may also be of longer duration and a flip flop may be readily made insensitive to other types of signals. Traces **1** and **2** illustrate the alternating triggering input signals while traces **3** and **4** illustrate the time relationship of the two switching device output signals. Signals received on the nontriggering input will, of course, have no effect on a flip flop. Outputs **40** and **42** are connected to the inputs of a logic gate **44**. Gate **44** is arranged to give a relatively short duration pulse whenever the flip flop **38** changes state and to produce a constant level d.c. output at all other times. Outputs **40** and **42** are also connected to the inputs of a pair of AND gates with output **40** being connected to one input of AND gate **46** and the output **42** being connected to one input of AND gate **48**. The output of the gate **44** is connected to the input of an adaptive delay means **50** which receives, as control inputs, signals from the various engine parameter sensors, as at **52**, indicative of engine operating conditions and, therefore, of engine fuel requirement. As will be readily observed, one of the inputs at **52** is derived from signal generator **54** which receives, as its input, the signal θ, derived from the pressure sensor **12** of FIG. 1 and representative of the instantaneous manifold pressure. Since, according to this invention, pressure sensor **12** may be a simple potentiometer having a substantially linear response with respect to pressure, the derived output signal, which may be a voltage Vpr, is expressed herein in terms of θ, and the angular movement of the slider element of a potentiometer or in terms of V_θ the actual electrical output signal. The output of the adaptive delay means **50** is fed through an inverter **56** and the output of the inverter **56** is connected to a second input of each AND gate **46** and **48**. The output of AND gate **46** is connected to amplifier **58** which, in turn, supplies controlling current to the first injector group. AND gate **48** is connected to amplifier **60** which supplies controlling current to the second injector group.

As will be readily apparent, the presence of an output signal from the flip flop **38** will occur at one output location to the exclusion of the other. This signal will then appear at one input of only one AND gate of only one amplifier. This signal selectively designates an injector or injector group for imminent injection. For this sake of example, we shall assume that the output signal of the flip flop **38** is at output location **40** so that the signal also appears at one input of AND gate **46**. The signal from the output **40** of the flip flop **38** also appears at the gate **44** where, assuming the flip flop **38** has just changed state, a short duration signal is passed to the adaptive delay means **50**. The adaptive delay means **50** is operative to produce an output after the passage of a predetermined amount of time. This time is determined by the values of the various sensory inputs applied at **52** to the adaptive delay **50**. During this initial period of time when the output of the adaptive delay **50** is zero, the inverter **56** is producing a full-strength output signal. This signal is applied to one input of each of

the AND gates **46** and **48.** Because of the intrinsic nature of AND gates, an output signal is produced only while an input signal is being applied to each and every input. This then dictates that AND gate **46** will produce an output to be amplified by amplifier **58** to open the first injector group since it is receiving an injector selection command directly from the flip flop **38** and an injector control command from the inverter **56.** At the end of the time delay period, adaptive delay means **50** produces a signal which is then inverted from a positive signal to a zero level signal by the inverter **56** so that the injection control command output signal of the inverter **56** is removed from the input to the AND gate **46** and the output of the AND gate **46** goes to zero thereby allowing the first injector group to close. During the period of time the first injector group is open, a metered amount of fuel under pressure is injected by the first injector group.

Referring now to FIG. **3,** the nonlinearizing circuit of the present invention is illustrated in a preferred embodiment which for purposes of illustration is shown as including five current generating means labeled A through E and five current sinking means labeled V through Z. In addition, circuit **100** also provides a constant current source **102.** Constant current source **102** is used to provide vertical shift of the composite curve **66** (as illustrated in FIG. **5**). The effect of constant current source **102** has not been illustrated in FIG. **5.**

Constant current source **102** is comprised of a pair of transistors **104, 106,** a pair of voltage divider resistors **108** and **110,** a load resistor **112,** and a current resistor **114.** Resistor **108** intercommunicates the base of transistor **104** to the B+ supply and resistor **110** intercommunicates the base of transistor **104** to the ground or common potential. These resistors thereby establish the conductive condition of transistor **104.** Load resistor **11***w* intercommunicates the emitter of transistor **104** to ground and the emitter of transistor **104** is also coupled to the base of transistor **106.** Current resistor **114** interconnects the emitter of transistor **106** with the source of electrical supply designated as B+. The voltage established across the voltage divider network comprised of resistors **108** and **110** is present at the emitter of transistor **106** and this voltage establishes the amount of current flowing through current resistor **114.** This current will appear substantially unchanged in output current lead **116** where it will feed into common conductor **118** to be dissipated across the output resistor **120.**

Each of the current generating means A through E is comprised of an input transistor **122** whose base, or control electrode, is coupled to the input signal Vpr indicative of manifold pressure, a pair of voltage divider resistors **124, 126** which interconnect the emitter of transistor **122** with the source of electrical energy and the common or ground location, a current controlling transistor **128,** and a current resistor **130.** The current resistor **130** interconnects the emitter of transistor **128** with the source of electrical energy, and the current flowing therethrough is determined by the voltage appearing at the base of transistor **128.** This voltage is determined by the voltage divider effect of resistors **124, 126** or the voltage appearing at the base of transistor **122** (reduced by the base-emitter voltage drop) whichever voltage is higher. For convenience, the corresponding elements within each current generating means A through E bear identical numerals with the suffix letter corresponding to the particular generating means. This system of numbering has also been applied to the current sinking means V, W, X, Y and Z.

The output conductors **132** communicate with switching means **134** having a switch element **136** capable of contacting either of two terminals **138, 140.** Terminal **138** is coupled to the base of transistor **142** and the base of transistor **142** is also coupled to the ground or common point by resistor **144.** The emitter of transistor **142** is coupled to a load resistor **146** also going to the ground or common point. The collector of transistor **142** is coupled directly to the terminal **140** and a communicating lead **148** couples terminal **140** to the common conductor **118.**

In current sinking means V, X and Y, the switch member interconnects terminals **134** and **138** while in current sinking means W and Z, the conducting member **136** interconnects the terminals **134** and **140.** The switching structure which is comprised of terminals **134, 138** and **140** and switching member **136** is not considered to be essential inasmuch as the interconnection provided by the switching structure will be a permanent interconnection once the specific output curve of the circuit is determined. Thus, the entire circuit embodiment of FIG. **3** represents the basic or starting circuit which would be tailored by the appropriate connection of current lead **132** to either of terminals **138** or **140.** Additional variation may be achieved by using variable resistors for resistances **130, 144** and **146.**

In current sinking means W and Z, the lack of a connection to terminal **138** renders transistor **142** nonconductive and the current appearing in current leads **132A** and **132E** will be transmitted via terminals **140** and output conductor **148** to the common conductor **118** and then through resistor **120** to ground. In current sinking means V, X and Y, the current appearing in the output current conductor **132** will be dissipated through resistor **144** in such a manner that transistor **142** is switched into the conduction mode. This will cause a current to flow out of the common conductor **118** and into the lead **148** from which it will flow through transistor **142** and resistor **146** to ground. Thus, taking current sinking means V, for example, the current generated within current generating means A will be completely dissipated by resistor **144** while transistor **142** and resistor **146** are operative to extract further amounts of current from the common conductor **118** thereby lessening the signal appearing at output terminal V.

Referring now to FIG. **4,** a graph is shown illustrating the relationship of current with respect to variations in air intake manifold pressure and the input voltage signal Vpr. The input signal Vpr is directly related to θ which may represent, for example, the angular rotation of throttle valves **20***v* (in FIG. **1**) from the fully closed position. Two current versus pressure curves are illustrated with curve **62** showing positive current (i.e., current added) and curve **64** showing negative current (i.e., current subtracted). Curve **64** is intended to illustrate the possibility that a current sink may be operatively coupled to a current source to reduce the total current generation while curve **62** illustrates the regular current output of a current generator. As can be observed, both values of current start at a low absolute value and increase to a high absolute value over the range denoted by V_1 and thereafter maintain a constant value equal to 1_1 for curve **62** and 1_2 for curve **64.** The

magnitude of I_2 exceeds the magnitude of I_1. This is indicative of the fact that with the illustrated embodiment, the current generated by the associated current generating means as well as calculatable amounts of current generated by other current generating means will be dissipated within a current sink. While a particular current sink may be coupled to a selected current generating means so that response over the variable range will be matched, the current sink here illustrated is adapted to dissipate greater amounts of current than are generated by the associated current generating means. Performance over the variable range, as denoted by the range O–V_t, on the horizontal axis will be controlled by the variable range of the associated current generating means.

Referring now to FIG. 5, the currents generated by the various current generating means as modified by the associated current sinks and a composite current graph is illustrated. The currents graphed correspond to the circuit illustrated in FIG. 3. The currents produced are labeled for convenience B and D while the currents being "sinked" are labeled V, X and Z. As can be seen, the various curves B, D, V, X and Z, when combined, produce the composite final shape curve 66. In the graphs of both FIGS. 4 and 5, the vertical axis is labeled + and − to indicate currents generated (+) and currents "sinked" (−).

The present invention thus clearly satisfies the stated objectives in the form of the preferred embodiment as well as in those variations within the skill of the man of ordinary skill in the art. The current sinks, for example, may be controlled as shown by connecting selected current generating means to the current sinks instead of to the output resistance or in the alternative, may be directly controlled by the input signal to be selectively active over specific regions of intake manifold air pressure. The specific form of the various sources and sinks as well as the total number thereof may also vary.

I claim:

1. A fuel control circuit for an internal combustion engine whose fuel requirement relates nonlinearly to engine air-consumption related parameter, said control circuit providing a signal having a value corresponding to engine fuel requirement and comprising:

means for receiving a first signal that is linearly related to the value of the engine air-consumption related parameter;

a plurality of signal generating circuit subsections, each including:

means defining a conductive electrical path for providing an output signal, said conductive path including an impedance element and a semiconductor means having a first electrode connected to one side of said impedance element;

control signal means for applying a control signal to a second electrode of said semiconductor means to control the value of the output signal, the value of said output signal being determined by the value of any signal decrease across said impedance element;

output signal varying means for applying values of said first signal to the second electrode of said semiconductor means to vary said output signal only when said first signal is displaced in one direction from the value of said control signal and to maintain said output signal at a predetermined value greater than zero when said first signal is displaced in the other direction from said control signal;

conductor means for commonly connecting a voltage source with the other side of said impedance element of each of said signal generating circuit subsection; and

signal combining means connected in series with a third electrode of each of said semiconductor means of each said signal generating circuit subsection for combining the output signals from each said signal generating circuit subsection to produce a signal that varies in response to first signal variations in a manner determined by the values of the control signals of each said signal generating circuit subsections, said control signals having values that cause said resultant signals to be nonlinearly related to said variable engine operating parameter and to have a magnitude proportional to the engine fuel requirement.

2. A fuel control circuit for an internal combustion engine whose fuel requirement relates nonlinearly to engine air-consumption related parameter, said control circuit providing a signal having a value corresponding to engine fuel requirement and comprising:

means for receiving a first signal that is linearly related to the value of the engine air-consumption related parameter;

a plurality of signal generating circuit subsections, each including:

means defining a conductive electrical path for providing an output signal, said conductive path including an impedance element and a semiconductor means having a first electrode connected to one side of said impedance element;

control signal means for applying a control signal to a second electrode of said semiconductor means to control the value of the output signal, the value of said output signal being determined by the value of any signal decrease across said impedance element;

output signal varying means for applying values of said first signal to the second electrode of said semiconductor means to vary said output signal only when said first signal is displaced in one direction from the value of said control signal and to maintain said output signal at a predetermined value greater than zero when said first signal is displaced in the other direction from said control signal;

conductor means for commonly connecting a voltage source with the other sides of said impedance element of each of said subsections;

signal combining means connected in series with a third electrode of each said semiconductor means of each said circuit subsections for combining the output signals from each signal generating circuit subsections to produce a resultant signal that varies in response to first signal variations in a manner determined by the values of the control signals for each of said signal generating means circuit subsections, said control signals having values that cause said resultant signals to be nonlinearly related to said variable engine operating parameter and to have a magnitude proportional to the engine fuel requirement; and

energy dissipating means connected to said signal combining means and switchingly connected to

said each of said signal generating circuit subsections for draining energy from said signal combining means in proportion to the value of signals received from said signal generating circuit subsections.

3. A fuel control circuit for providing a signal varying with the engine fuel requirement of an internal combustion engine having a fuel requirement nonlinearly related to an engine air-consumption related parameter comprising:

a. an energy source for providing electrical energy;

b. output impedance means for developing an output signal from a plurality of controllable currents;

c. transducer means for providing an air-consumption signal varying with said engine air-consumption related parameter;

d. a plurality of controllable current sources, each comprising:

i. input means electrically connected to receive said air-consumption signal from said transducer means;

ii. source impedance means electrically connected to receive electrical energy from said energy source for providing one of said controllable currents;

iii. output means electrically connecting said source impedance means to communicate said one controllable current to said output impedance means; and

iv. current value establishing means connecting said input means and said output means for establishing said controllable current at a constant value greater than zero when the values of said air-consumption signal comprise a first range of values preselected for each said current source and for establishing said controllable current at a varying value less than said constant value greater than zero varying in accordance with a first predetermined relationship to values of said air-consumption signal when said air-consumption signal comprises a second range of values preselected for each said current source;

whereby said each controllable current source communicates just one of said constant variable currents to said output impedance means depending on whether said air consumption signal comprises said preselected first or second ranges and whereby said output impedance means combines said constant and varying values so that said output signal varies nonlinearly with said engine air-consumption related parameter.

4. The fuel control circuit of claim 3 wherein at least one of said controllable current sources has its said output means electrically connected to current sink means for establishing a second predetermined relationship to values of said air-consumption related parameter by uniformly decreasing the said varying values.

* * * * *

UNITED STATES PATENT OFFICE

CERTIFICATE OF CORRECTION

Patent No. 3,800,750 Dated April 2, 1974

Inventor(s) Junuthula N. Reddy

It is certified that error appears in the above-identified patent and that said Letters Patent are hereby corrected as shown below:

In column 2, line 52, "had" should be corrected to read ---has---

In column 3, line 32, "coupling" should be corrected to read ---computing---

In column 3, line 41, after "that" insert ---the---

In column 4, line 29, after "of" insert ---the---

In column 4, line 38, after "θ" delete "and"

In column 8, Claim 1, line 12, after "a" insert ---resultant---

In column 10, Claim 3, line 16, after "constant" insert ---and---

Signed and sealed this 17th day of September 1974.

(SEAL)
Attest:

McCOY M. GIBSON JR.
Attesting Officer

C. MARSHALL DANN
Commissioner of Patents

FORM PO-1050 (10-69)

USCOMM-DC 60376-P69
* U.S. GOVERNMENT PRINTING OFFICE : 1969 O—366-334