June 23, 1959 F. S. PEARNE 2,891,765

JACK

Filed Nov. 25, 1955 2 Sheets-Sheet 1

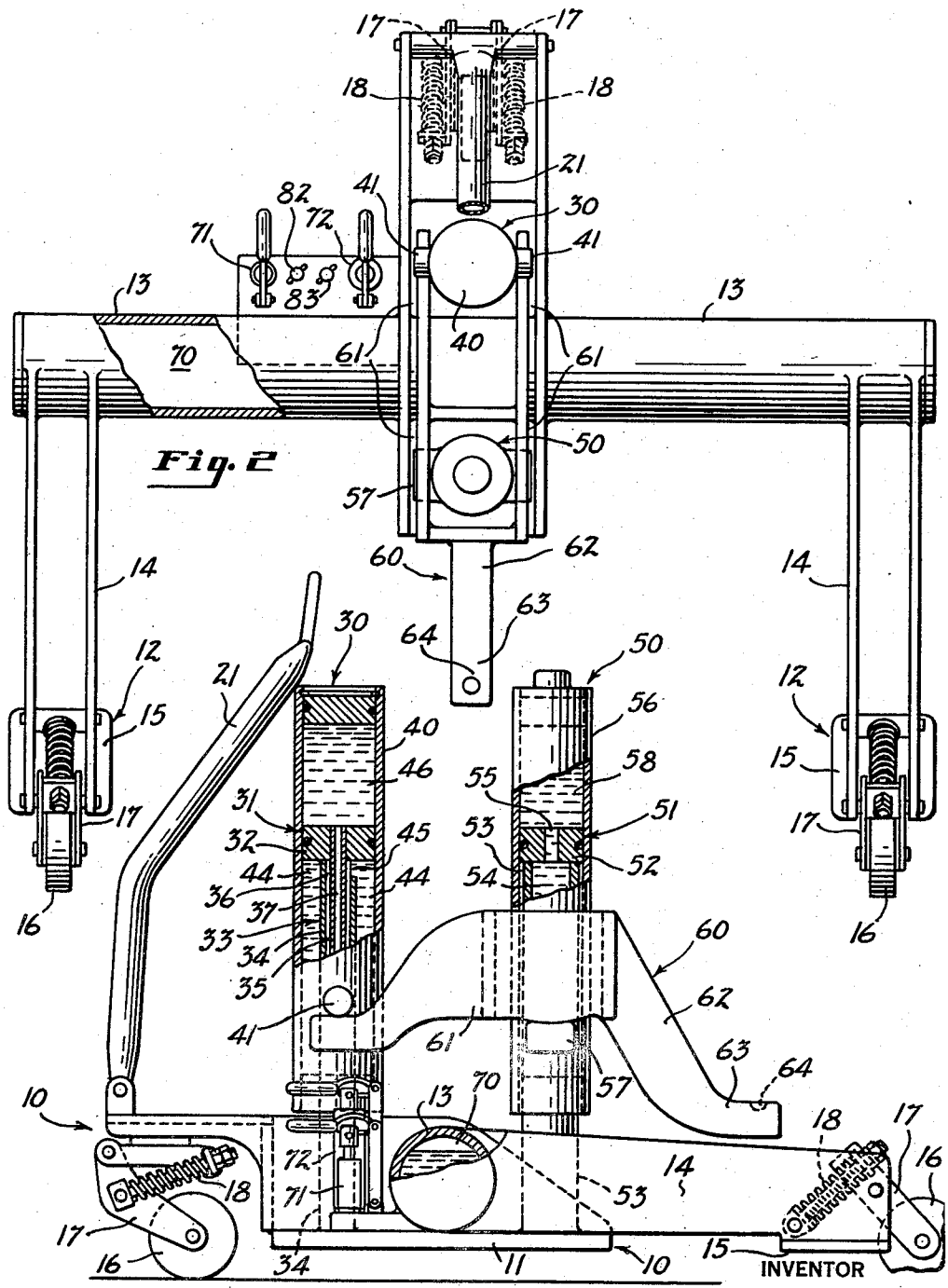

Fig. 2

Fig. 1

INVENTOR
Frank S. Pearne
BY Ely, Pearne & Gordon
ATTORNEYS

June 23, 1959 F. S. PEARNE 2,891,765

JACK

Filed Nov. 25, 1955 2 Sheets-Sheet 2

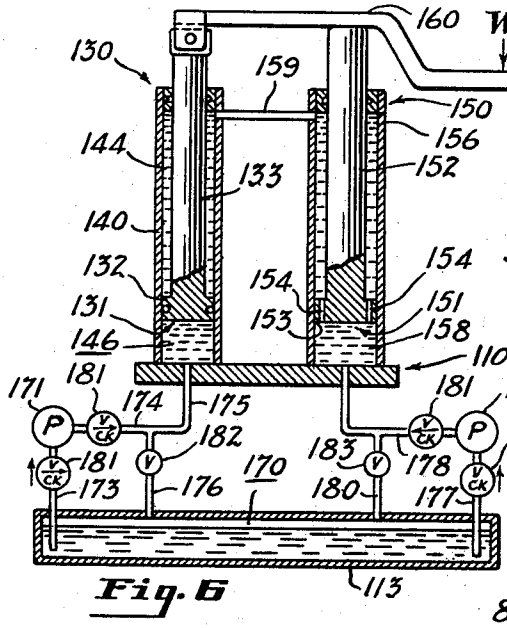

Fig. 6

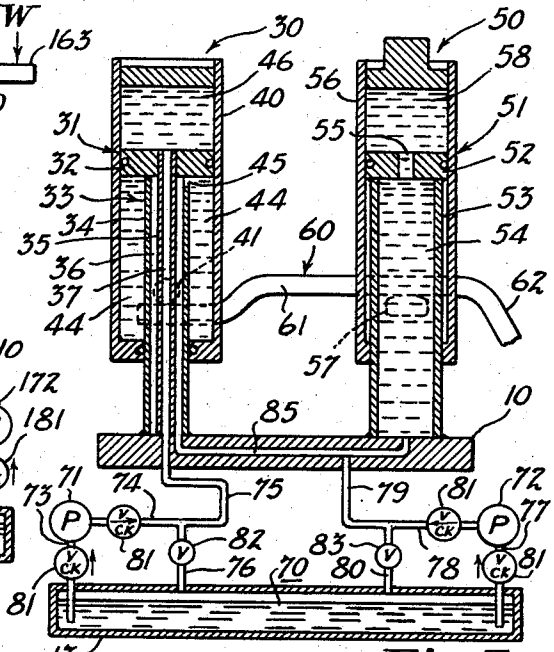

Fig. 3

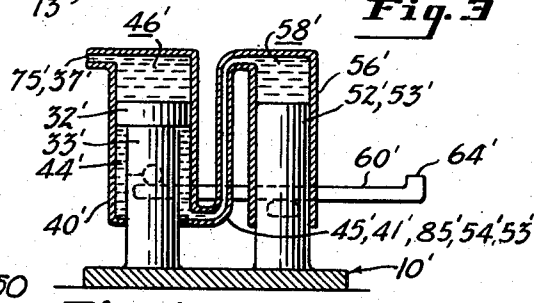

Fig. 4

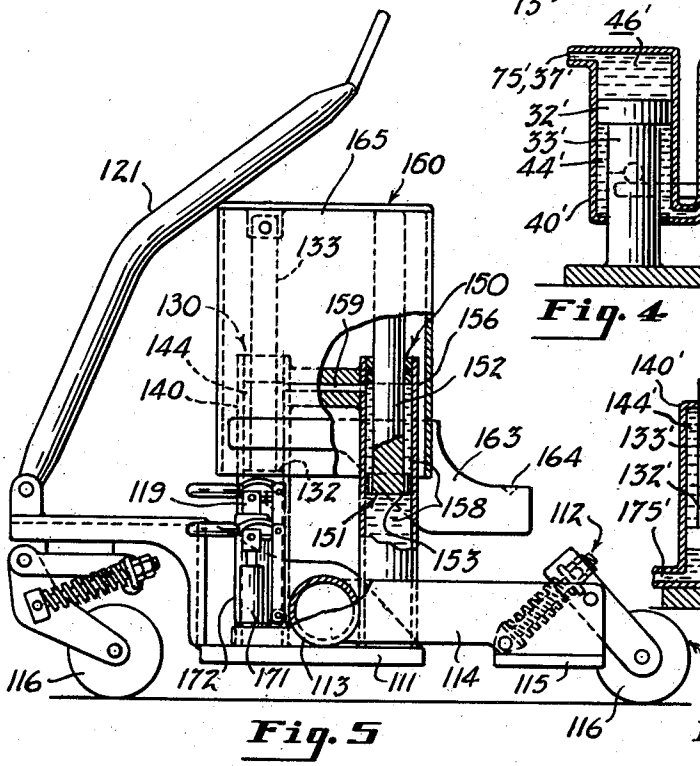

Fig. 5

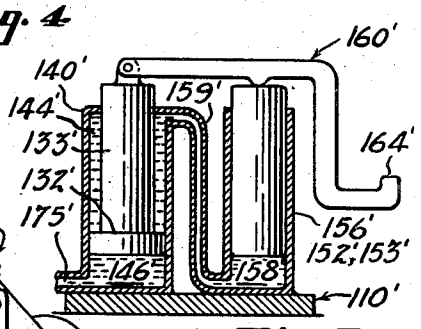

Fig. 7

INVENTOR
Frank S. Pearne
BY Ely, Pearne & Gordon
ATTORNEYS

United States Patent Office 2,891,765
Patented June 23, 1959

2,891,765

JACK

Frank S. Pearne, Alhambra, Calif.

Application November 25, 1955, Serial No. 548,867
14 Claims. (Cl. 254—2)

This invention relates to jacks and particularly to jacks to be used to lift heavy aircraft incident to line maintenance and repair operations where cranes or other large and heavy lifting devices are unavailable or impractical. Mechanisms of the type to which the invention relates are most commonly used in changing wheels or tires of aircraft landing gear and in checking brakes and performing other similar maintenance and servicing operations on the landing gear. To this end, most heavy aircraft are provided with jack pads immediately below the main supporting strut or struts of the landing gear. These pads are adapted to be lifted by suitable jacks to support the weight normally supported by the wheel or wheels of the landing gear, so that the wheels may be relieved of all weight and may be rotated and disassembled.

Structural considerations require that aircraft landing gear jack pads be located more or less centrally at the bottom of the landing gear strut and spindle assembly. The lifting of aircraft having dual tire landing gear is particularly troublesome due to the difficulty in placing a jack mechanism in proper position with the lifting element of the jack suitably disposed beneath the jack pad of the landing gear strut. Jacks have therefore been provided with transverse beams supported at opposite ends by hydraulic rams and adapted to "reach under" the landing gear strut and spindle assembly. An example of such a jack is disclosed in U.S. Patent 2,545,403.

The broad object of the present invention is to provide a jack of simple and inexpensive construction which can be conveniently used to suport both single and dual tire landing gear and the like.

A more particular object of the invention is to provide a jack having a cantilevered beam support for a lifting foot wherein lifting loads are imposed on the jack to one side of a pair of hydraulic ram assemblies, and the ram assemblies are hydraulically interconnected and constructed for displacement together to comprise an hydraulic servo-mechanism with forces being imposed on the hydraulic servo-mechanism through each ram assembly, the actuated member of the ram assembly remote to the lifting load being stressed in an opopsite sense (tension or compression) from that in which the actuated member of the ram assembly nearest the lifting load is stressed.

These and other objects and advantages of the invention will become more fully apparent from the following description of specific examples of the invention. These examples are presently preferred embodiments of the invention which will enable the art to readily practice the invention for purposes of evaluation and trial, either by duplication of such examples or by alteration of specific details thereof to provide alternative structures embodying the principles and teaching of the invention.

In the drawings:

Figure 1 is a side elevation of a jack structure which exemplifies the invention.

Figure 2 is a plan view of the jack shown in Figure 1.

Figure 3 is a schematic illustration of the hydraulic-mechanical linkage system associated with the jack shown in Figure 1.

Figure 4 is a highly schematic sketch of a hydraulic-mechanical linkage system similar to that of Figure 3, given to illustrate a simplication thereof.

Figure 5 is a side elevation of another jack structure which exemplifies the invention.

Figure 6 is a schematic illustration of the hydraulic-mechanical linkage system associated with the jack shown in Figure 5.

Figure 7 is a highly schematic sketch similar to Figure 4 but corresponding with the example of the invention shown in Figures 5 and 6.

The jack illustrated in Figures 1–3 comprises a base, generally indicated at **10**, on the bottom of which is formed a base pad **11**. The jack base is provided with widely spaced outriggers **12** which are rigidly fixed to the central base by a rigid torque tube **13** and arms **14**. Each outrigger is preferably provided with an outrigger pad **15**. Wheels **16** are mounted on the outriggers and the rear center portion of the base by means of the pivoting links **17** and are urged to extended position by the springs **18**. Sufficient downward force on the base **10** forces the wheels **16** to retract against the tension of the springs **18** and allows the base pad **11** and the base pads **15** to contact the deck or other foundation on which the jack is placed. A pivoted handle **21** is provided for conveniently moving and placing the jack. The single wheel **16** immediately below the handle **21** may conveniently be mounted to swivel on the base **10** as a caster wheel.

Supported on the base are a pair of hydraulic ram assemblies generally indicated at **30** and **50**. The first hydraulic ram assembly **30** includes a ramming member generally indicated at **31**. The ramming member **31** comprises a piston **32** mounted on a shaft **33** which is fixed to the base **10**. The shaft **33** consists of an outer sleeve **34** and a hollow inner sleeve **35**. The sleeves **34** and **35** define an annular passage **36**; the hollow inner sleeve **35** defines a central passage **37**. An hydraulic cylinder **40** receives the ramming member **31** in telescoping relationship. The hydraulic cylinder **40**, the piston **32**, and the shaft **33** define a variable-volume chamber **44** communicating with the passage **36** through the port **45**. The hydraulic cylinder **40** and the piston **32** also define a variable-volume chamber **46**. A pair of bosses **41** extend laterally from the side walls of the hydraulic cylinder **40**.

The second hydraulic ram assembly **50** includes a second ramming member generally indicated at **51**. The second ramming member comprises a piston **52**, mounted on a shaft **53** which is fixed to the base **10** and which has an open central passage **54**. The hydraulic ram assembly **50** also includes an hydraulic cylinder **56** which receives the ramming member **51** in telescoping relationship. A pair of lugs **57** extend laterally from the walls of the hydraulic cylinder **56**. The hydraulic cylinder **56** and the ramming member **51** together define a variable-volume chamber **58**. The cross-sectional area of the bore of the hydraulic cylinder **56** is, of course, the generatrix of the variable volume of the chamber **58**. The chamber **58** communicates with the passage **54** through a port **55**.

A top or upper platen **60** extends across the hydraulic ram assemblies **30** and **50** and is tied thereto in supported relationship by engagement with the bosses **41** and the lugs **57**, in a manner which will be apparent from the drawings. The member **60** includes an inboard portion **61** and a cantilever portion **62** which comprises a lifting foot **63** on which is provided a lifting shoe **64**, which may amount simply to a depression adapted to receive a jack pad boss on the object to be lifted. The lifting shoe obviously may have other forms; for example, it may

comprise a boss on the lifting foot 63 which is adapted to be received in a jack pad depression on the object to be lifted. If a lifting shoe is not provided, the jack will, of course, be operative, but there may be considerable danger of serious accidents occurring through slipping.

The interior of the torque tube 13 comprises an hydraulic reservoir 70. Above the reservoir are mounted hand pumps 71 and 72. The reservoir and the hand pumps are interconnected by the various lines 73—80 to the hydraulic ram assemblies 30 and 50, in the manner shown in Figure 3. Check valves 81 are provided as indicated. A selector valve 82 connects line 75 with either line 74 or line 76. A valve 83 is provided in the line 80. The annular passage 36 and the passage 54 are interconnected by a line 85.

The jacks shown in Figures 1–3 is wheeled into position under aircraft or other objects to be lifted with the lifting shoe 64 positioned directly underneath a jack pad. At this time, the valve 82 may be opened to relieve the chamber 46 and assure that the jack is fully retracted. If full retraction of the hydraulic cylinder 56 does not occur, the presence of excess fluid in the chambers 44 and 58 is indicated. The valve 83 may be momentarily opened to connect the line 79 to the line 80 in order to relieve the chambers 44 and 58 just sufficiently to allow the hydraulic cylinder 56 to fully retract. If, on the other hand, the hydraulic cylinder 40 remains partially elevated upon full relief of the chamber 46, an insufficiency of fluid in the chambers 44 and 58 is indicated, causing atmospheric pressure to maintain the piston 40 elevated by resisting further expansion of the chamber 44 without corresponding further contraction of the chamber 58. With the valve 83 closed, the pump 72 is actuated just sufficiently to provide enough fluid in the chambers 44 and 58 to allow the cylinder 40 to fully retract.

To lift the object under which the jack is located, the pump 71 is actuated with the valves 82 and 83 closed. Hydraulic fluid is drawn through the line 73 and forced through the lines 74 and 75 and the passage 37 into the chamber 46. As fluid continues to be forced into the chamber 46, the ramming member 31 is forced downwardly relative to the hydraulic cylinder 40, causing the volume of the chamber 44 to be reduced and forcing fluid therefrom through the port 45 and the passages 36, 85 and 54, and through the port 55 into the chamber 58.

The cross-sectional area of the annular chamber 44 is substantially the same as the cross-sectional area of the bore of the hydraulic cylinder 56. Accordingly, as the hydraulic cylinder 40 is forced upwardly by the injection of fluid into the chamber 46, the upward displacement of the cylinder 40 is matched by the upward displacement of the cylinder 56. Thus the variable-volume chambers 44 and 58 vary equally in volume in inverse relationship, and these two chambers and the passageways 36 and 85 connecting them for reversible fluid flow from one to the other constitute a closed constant volume system. This servo-relationship of the cylinder 56 to the cylinder 40 is disturbed only in the event that there is leakage in the system. With normal hydraulic components, such leakage will generally be negligible. If, however, there should be some leakage, with a resultant tendency of the jack to tilt, this can be easily corrected by actuating the pump 72 to force additional fluid into the chambers 44 and 58 to compensate for the leakage which has occurred and to force the jack again into a precise, erect position.

The platen 60 tends to force the hydraulic cylinder 56 downwardly and to force the hydraulic cylinder 40 upwardly. The hydraulic cylinders 40 and 56 constitute the actuated members of the hydraulic ram assemblies 30 and 50, and it will be clear that the cylinder 40 is in mechanical compression and that the cylinder 56 is in mechanical tension.

During the majority of the upward movement of the cylinders 40 and 56, the full weight of the aircraft or other object being lifted is borne by the jack. However, as upward movement is commenced and when the lifting shoe approaches the jack pad and initiates contact with it, the weight of the object is not borne. It is first necessary to continue to raise the cylinders 40 and 56 a sufficient amount to force the jack structure as a whole downwardly against the relatively light tension of the springs 18. This downward forcing causes the wheels 16 to retract and positions the pads 11 and 15 in direct contact with the deck or other foundation on which the jack is employed.

When the aircraft or other object is raised to the desired level, it may be maintained at such level for extended periods. Any tilting of the jack caused by slight leakage from the chambers 46 or 58 is easily rectified in the manner described above. Any lowering of the object being supported, caused by leakage from the chamber 44, is easily rectified by several strokes of the actuating handle associated with the pump 71.

When it is desired to lower the object being supported, the valve 82 is opened. Fluid is thereby relieved from the chamber 46, allowing this chamber to diminish in volume. As the cylinder 40 lowers, the volume of the chamber 44 increases to relieve fluid from the chamber 58 and allow the cylinder 56 to settle in servo-relationship with the cylinder 40. When the jack is lowered almost out of contact with the object being lifted, the weight of such object will be gradually shifted to supporting structure other than the jack, and the jack will rise on the wheels 16. The dead weight of the platen 60 and the cylinders 40 and 56 continues to express fluid from the chamber 46, and the jack finally lowers into fully retracted position out of contact with the object it had supported. It is to be noted that the lifting foot of the jack may be extended both below and above the extremes of its normal lifting movement by deliberately tilting the platen 60. Thus, when the jack is in fully retracted position and it is desired to further lower the lifting foot 63, the valve 83 is momentarily opened and the pump 71 is briefly actuated. The bosses 41 thereby may be raised relative to the lugs 57 to accommodate downward tilting of the platen 60 and further depression of the lifting foot. When the jack is fully normally extended, the valve 82 may be momentarily opened to cause both the bosses 41 and the lugs 57 to be slightly lowered. The pump 72 may then be actuated to raise the lugs 57 relative to the bosses 41, thereby upwardly tilting the platen 60 to raise the lifting foot above its normally uppermost position.

The jack structure illustrated in Figures 5 and 6 includes a base generally indicated at 110. A number of elements are provided which are similar to those previously described in connection with the description of the jack shown in Figures 1–3. These include a base pad 111, outriggers 112, a torque tube 113, arms 114, outrigger pads 115, wheels 116, manual pumps 171 and 172, and a pivoted handle 121.

Supported on the base 110 are a pair of hydraulic ram assemblies 130 and 150. The ram assembly 130 includes a first ramming member, generally indicated at 131, which comprises a piston 132 mounted on a shaft 133. An hydraulic cylinder 140 is fixed to the base 110 and receives the ramming member 131 in telescoping relationship. The hydraulic cylinder 140, piston 132, and shaft 133 together define a variable-volume annular chamber 144. The hydraulic cylinder 140 and the piston 132 together define another variable-volume chamber 146 (Figure 6).

The hydraulic ram assembly 150 includes a ramming member generally indicated at 151. The ramming member 151 comprises a ram shaft 152 and a guide spider or piston 153 through which extends a port or ports 154 (Fig. 6). An hydraulic cylinder 156 receives the ramming member 151 in telescoping relationship. The hydraulic cylinder 156 and the ram shaft 152 together de-

fine a variable-volume chamber **158** which is incidentally divided into an annular portion and a cylindrical portion which, however, are in communication with each other at all times through the port or ports **154**. The cross-sectional area of the ram shaft **152** is, of course, the generatrix of the variable volume of the chamber **158**, since the variable volume is only that volume included within the projection of the cylindrical periphery of the ram shaft **152**. The chamber **158** communicates with the annular chamber **144** through a line **159**.

A top or upper platen **160** extends across the hydraulic ram assemblies **130** and **150**. The platen **160** may constitute a hollow rigid housing **165** adapted to raise and lower over the hydraulic cylinders **140** and **156** and to which is fixed a lifting foot **163** on which is provided a lifting shoe **164**. The upper end of the shaft **133** is pivoted to a lug fixed to the top inner wall of the housing **165**, in a manner which will be apparent from the drawings (Figure 5). The top wall of the housing **165** bears on the top end of the ram shaft **152**. In the present embodiment, the portion of the upper platen which is inboard of the hydraulic ram assemblies consists of wall portions of the housing **165**, while the portion of the platen which is cantilevered to one side of the hydraulic ram assemblies comprises a minor portion of the housing **165** and also comprises the foot **163**. The interior of the torque tube **113** comprises an hydraulic reservoir **170**. There are also provided hand pumps **171** and **172**, lines **173—180**, check valves **181** and valves **182** and **183** (Fig. 6), which are similar to the like items described in connection with the jack shown in Figures 1–3.

The use of the jack shown in Figures 5 and 6 is similar to the use of the jack shown in Figures 1–3. The cross-sectional area of the annular chamber **144** is the same as the cross-sectional area of the ram shaft **152**. Accordingly, as the hydraulic ramming member **131** (comprising the piston **132** and the shaft **133**) is forced upwardly by injection of fluid into the chamber **146**, the upward displacement of this ramming member is matched by upward displacement of the ram shaft **152**. Thus the variable chambers **144** and **158** vary equally in volume in inverse relationship, and these two chambers and the passageway **159** connecting them for reversible fluid flow from one to the other constitute a closed constant volume system. Under load, the platen **160** tends to pull the shaft **133** upwardly and to force the shaft **152** downwardly. It will be clear that when the jack is under load the shaft **133** is in tension and the shaft **152** is in compression. The jack is lowered by relieving fluid from the chamber **146**.

The highly schematic sketch of Figure 4 is generally equivalent in its overall hydraulic and mechanical organization to the jack shown in Figures 1–3. The jack shown in the sketch of Figure 7 is likewise similar to the jack illustrated in Figures 5 and 6. Figures 4 and 7 are intended to clarify the principles and mode of operation of the invention and to demonstrate the high degree to which the alternative examples of the invention share common principles. Certain of the elements in the more detailed drawings, or their functional equivalents, are indicated by like reference numerals with primes in Figures 4 and 7.

The differences in Figure 4 from Figure 3 by which the linkage of Figure 3 is simplified, for clarifying the principle on which the invention is based, are as follows: In Figure 4, a simplified conduit, designated **75'**, **37'** is provided for supplying fluid to the variable volume chamber **46'** and exhausting it therefrom. Since no fluid need normally be supplied to or exhausted from the part of the system made up of the variable volume chambers **44'** and **58'** and their interconnecting conduit, except to initially fill this part of the system and replace fluid lost by leakage, the fluid supply conduits for this part of the system have been omitted. Also, by directly connecting the chambers **44'** and **58'** by a simple conduit, designated **45'**, **41'**, **85'**, **54'**, **53'**, the hydraulic principle on which the invention is based is simplified and more readily understood. Thus, the piston **52'** and connected shaft **53'** need not serve as a passageway for fluid flowing between chambers **44'** and **58'** and may be of the same diameter so as to completely fill the cross section of the cylinder **56'** from the upper surface of the piston **52'** to the lower end of this cylinder. In this simplified form of the invention, the rate of change in volume of the annular variable volume chamber **44'** is the same in magnitude but opposite in sign to the rate of change in volume of the chamber **58'**. Thus, the two cylinders **40'** and **56'** are positively hydraulically interlocked to elevate and retract together as fluid is supplied to or withdrawn from the chamber **46'**.

The differences in Figure 7 from Figure 6 by which the linkage of Figure 6 is simplified, for further clarifying the principle on which the invention is based, are as follows: In Figure 7, a conduit **159'** directly connects the annular variable volume chamber **144'** to the variable portion of the variable volume chamber **158'**, instead of indirectly around the shaft **152** and through the piston ports **154** as in Figure 6. Thus, the piston **153'** and connected shaft **152'** need not serve as a passageway for fluid flowing between the chambers **144'** and **158'** and may be of the same diameter so as to completely fill the cross section of the cylinder **156'** from the lower surface of the piston **153'** to the upper end of this cylinder. Also, a simplified conduit **175'** is provided for supplying fluid to the variable volume chamber **146'** and exhausting it therefrom. Also, for the same reasons as in Figure 4, the fluid supply conduits for the part of the system made up of the variable volume chambers **144'** and **158'** and their interconnecting conduit **159'** have been omitted. In this simplified form of the invention, the rate of change in volume of the annular variable volume chamber **144'** is the same in magnitude but opposite in sign to the rate of change in volume of the chamber **158'**. Thus, the two ramming members are positively hydraulically interlocked to elevate and retract together as fluid is supplied to or withdrawn from the chamber **146'**.

In both Figure 4 and Figure 7, the generatrix of the variable volume of the chamber **58'** or **158'** is the cross-sectional area of the piston **52'** or **152'** which defines one end of the chamber, which area is the same as the cross-sectional area of the cylinder **56'** or **156'** in which the piston is located. This generatrix is equal in area, in both Figure 4 and Figure 7, to the cross-sectional area of the annular variable volume chamber **44'** or **144'** in the other cylinder **40'** or **140'**.

It is to be noted that the hydraulic servo-mechanism embodied in the present invention, in which ramming members such as **31** and **131** are the controls and ramming members such as **51** and **151** are the slaves, involves a system wherein the forces imposed on the servo-system per se by the control elements and the slave elements are cumulative in the sense that the controlled linkage imposes on both the control elements and the slave elements forces which tend to compress the confined fluid within the servo-system per se. Thus, relatively high pressures occur within the servo-system to counteract the high moments of loads which are imposed entirely to one side of the jack. In this regard the present invention departs from hydraulic servo-systems of the prior art in which the forces imposed on the servo-system per se by the controlled linkage are imposed only through the slave elements and not through the control elements.

What is claimed is:

1. A jack comprising a base, a pair of spaced first and second vertical hydraulic ram assemblies supported on said base, an upper platen comprising a unitary structure having an inboard portion extending across said ram assemblies and tied thereto in supported relation for

a vertical translational movement therewith as they are elevated and retracted, said platen having a cantilever portion projecting beyond said second ram assembly in a direction away from said first ram assembly, said cantilever portion comprising a lifting foot including a lifting shoe adapted to contact a jack pad on the object to be lifted, said first hydraulic ram assembly comprising a first hydraulic cylinder, a first ramming member including a first piston slidable with respect to the bore of said first cylinder and a first shaft fixed to said first piston and passing out one end of said first cylinder, said first cylinder, piston and shaft defining adjacent said one end of said first cylinder a first variable-volume annular chamber having a given cross-sectional area, said first cylinder and piston defining adjacent the other end of said first cylinder a second variable-volume chamber, said second hydraulic ram assembly comprising a second hydraulic cylinder, a second ramming member in telescoping relation with said second cylinder to define therewith a third variable-volume chamber, the variable-volume of which diminishes as a straight line function of the degree of telescopic retraction of said second ramming member and said second cylinder with respect to each other, the generatrix of said variable volume being equal to said given cross-sectional area, conduit means connecting said first chamber and said third chamber, means for supplying hydraulic fluid to said second chamber and for relieving fluid therefrom, and means for supplying hydraulic fluid to at least one of said first and third chambers and for relieving fluid therefrom.

2. A jack comprising a base, a pair of spaced first and second vertical hydraulic ram assemblies supported on said base, an upper platen comprising a unitary structure having an inboard portion extending across said ram assemblies and tied thereto in supported relation for a vertical translational movement therewith as they are elevated and retracted, said platen having a cantilever portion projecting beyond said second ram assembly in a direction away from said first ram assembly, said cantilever portion comprising a lifting foot including a lifting shoe adapted to contact a jack pad on the object to be lifted, said first hydraulic ram assembly comprising a first hydraulic cylinder, a first ramming member including a first piston slidable with respect to the bore of said first cylinder and a first shaft fixed to said first piston and passing out one end of said first cylinder, said first cylinder, piston and shaft defining adjacent said one end of said first cylinder a first variable-volume annular chamber having a given cross-sectional area, said first cylinder and piston defining adjacent the other end of said first cylinder a second variable-volume chamber, said second hydraulic ram assembly comprising a second hydraulic cylinder, a second ramming member comprising a second piston slidable with respect to the bore of said second cylinder and a second shaft fixed to said second piston and passing through one end of said second cylinder, said second cylinder and said second ramming member defining a third variable-volume chamber, the cross-sectional area of the bore of said second cylinder being equal to said given cross-sectional area, conduit means connecting said first chamber and said third chamber, means for supplying hydraulic fluid to said second chamber and for relieving fluid therefrom, and means for supplying hydraulic fluid to at least one of said first and third chambers and for relieving fluid therefrom.

3. A jack comprising a base, a pair of spaced first and second vertical hydraulic ram assemblies supported on said base, an upper platen comprising a unitary structure having an inboard portion extending across said ram assemblies and tied thereto in supported relation for a vertical translational movement therewith as they are elevated and retracted, said platen having a cantilever portion projecting beyond said second ram assembly in a direction away from said first ram assembly, said cantilever portion comprising a lifting foot including a lifting shoe adapted to contact a jack pad on the object to be lifted, said first hydraulic ram assembly comprising a first hydraulic cylinder, a first ramming member including a first piston slidable with respect to the bore of said first cylinder and a first shaft fixed to said first piston and passing out one end of said first cylinder, said first cylinder, piston and shaft defining adjacent said one end of said first cylinder a first variable-volume annular chamber having a given cross-sectional area, said first cylinder and piston defining adjacent the other end of said first cylinder a second variable-volume chamber, said second hydraulic ram assembly comprising a second hydraulic cylinder, a second ramming member slidable with respect to the bore of said second cylinder and passing through one end of said second cylinder, said second cylinder and said second ramming member defining a third variable-volume chamber, the cross-sectional area of the bore of said second cylinder being equal to said given cross-sectional area, conduit means connecting said first chamber and said third chamber, means for supplying hydraulic fluid to said second chamber and for relieving fluid therefrom, and means for supplying hydraulic fluid to at least one of said first and third chambers and for relieving fluid therefrom.

4. A jack comprising a base, a pair of spaced first and second vertical hydraulic ram assemblies supported on said base, said first hydraulic ram assembly comprising a first vertical shaft fixed to said base, a first hydraulic cylinder, said first shaft passing through the lower end of said first cylinder, a piston on the upper end of said shaft, said first cylinder, shaft and piston defining adjacent the lower end of said first cylinder a first variable-volume annular chamber having a given cross-sectional area, said first cylinder and piston defining adjacent the upper end of said first cylinder a second variable-volume chamber, said second hydraulic ram assembly comprising a vertical ramming member fixed to said base, a second hydraulic cylinder in telescoping relation with said vertical ramming member to define therewith a third variable-volume chamber, the cross-sectional area of said vertical ramming member being equal to said given cross-sectional area, conduit means connecting said first chamber and said third chamber and means for supplying hydraulic fluid to said second chamber and for relieving fluid therefrom, a platen comprising a unitary structure having an inboard portion extending across said first and second hydraulic cylinders and tied thereto in supported relation for vertical translational movement therewith as they are elevated and retracted, said platen having a cantilever portion projecting beyond said second hydraulic cylinder in a direction away from said first hydraulic cylinder, and said cantiliver portion comprising a lifting foot, including a lifting shoe adapted to contact a jack pad on the object to be lifted.

5. A jack comprising a base, a pair of spaced first and second vertical hydraulic ram assemblies supported on said base, an upper platen comprising a unitary structure having an inboard portion extending across said ram assemblies and tied thereto in supported relation for vertical translational movement therewith as they are elevated and retracted, said platen having a cantilever portion projecting beyond said second ram assembly in a direction away from said first ram assembly, said cantilever portion comprising a lifting foot including a lifting shoe adapted to contact a jack pad on the object to be lifted, said first hydraulic ram assembly comprising a first hydraulic cylinder, a first ramming member including a first piston slidable with respect to the bore of said first cylinder and a first shaft fixed to said first piston and passing out one end of said first cylinder, said first cylinder, piston and shaft defining adjacent said one end of said first cylinder a first variable-volume annular chamber having a given cross-sectional area, said first cylinder and piston defining adjacent the other end

of said first cylinder a second variable-volume chamber, said second hydraulic ram assembly comprising a second hydraulic cylinder, a second ramming member including a ram shaft slidably passing through one end of said second cylinder, guide means fixed on the inner end of said ram shaft and slidably engaging the inner walls of said cylinder and having openings to accommodate movement of hydraulic fluid therethrough, said second cylinder and said ram shaft defining a third variable-volume chamber, the cross-sectional area of said ram shaft being equal to said given cross-sectional area, conduit means connecting said first chamber and said third chamber, means for supplying hydraulic fluid to said second chamber and for relieving fluid therefrom, and means for supplying hydraulic fluid to at least one of said first and third chambers and for relieving fluid therefrom.

6. A jack comprising a base, a pair of spaced first and second vertical hydraulic ram assemblies supported on said base, an upper platen comprising a unitary structure having an inboard portion extending across said ram assemblies and tied thereto in supported relation for vertical translational movement therewith as they are elevated and retracted, said platen having a cantilever portion projecting beyond said second ram assembly in a direction away from said first ram assembly, said cantilever portion comprising a lifting foot including a lifting shoe adapted to contact a jack pad on the object to be lifted, said first hydraulic ram assembly comprising a first hydraulic cylinder, a first ramming member including a first piston slidable with respect to the bore of said first cylinder and a first shaft fixed to said first piston and passing out one end of said first cylinder, said first cylinder, piston and shaft defining adjacent said one end of said first cylinder a first variable-volume annular chamber having a given cross-sectional area, said first cylinder and piston defining adjacent the other end of said first cylinder a second variable-volume chamber, said second hydraulic ram assembly comprising a second hydraulic cylinder, a second ramming member including a ram shaft slidably passing through one end of said second cylinder, said second cylinder and said ram shaft defining a third variable-volume chamber, the cross-sectional area of said ram shaft being equal to said given cross-sectional area, conduit means connecting said first chamber and said third chamber, means for supplying hydraulic fluid to said second chamber and for relieving fluid therefrom, and means for supplying hydraulic fluid to at least one of said first and third chambers and for relieving fluid therefrom.

7. A jack comprising a base, a downwardly facing pad on said base, a plurality of wheels on said base, means yieldingly urging said wheels below the level of said pad, a pair of spaced first and second vertical hydraulic ram assemblies supported on said base above said pad, means for supplying hydraulic fluid to said ram assemblies to elevate them and for relieving hydraulic fluid from said ram assemblies to accommodate retraction thereof, a hydraulic connection between said ram assemblies positively interlocking them for elevation and retraction together, an upper platen comprising a unitary structure having an inboard portion extending across said ram assemblies and tied thereto in supported relation for vertical translational movement therewith as they are elevated and retracted, said platen having a cantilever portion projecting beyond said second ram assembly in a direction away from said first ram assembly, said cantilever portion extending downwardly toward the level of said pad and including a lifting foot extending outwardly in alignment with said first and second ram assemblies.

8. A jack comprising a base, a downwardly facing pad on said base, a pair of spaced first and second vertical hydraulic ram assemblies supported on said base above said pad, means for supplying hydraulic fluid to said ram assemblies to elevate them and for relieving hydraulic fluid from said ram assemblies to accommodate retraction thereof, a hydraulic connection between said ram assemblies positively interlocking them for elevation and retraction together, an upper platen comprising a unitary structure having an inboard portion extending across said ram assemblies and tied thereto in supported relation for vertical translational movement therewith as they are elevated and retracted, said platen having a cantilever portion projecting beyond said second ram assembly in a direction away from said first ram assembly, said cantilever portion including a lifting foot extending outwardly in alignment with said first and second ram assemblies.

9. A jack comprising a base, a pair of spaced first and second vertical hydraulic ram assemblies supported on said base, an upper platen comprising a unitary structure having an inboard portion extending across said ram assemblies and tied thereto in supported relation for vertical translational movement therewith as they are elevated and retracted, said platen having a cantilever portion projecting beyond said second ram assembly in a direction away from said first ram assembly, said cantilever portion extending downwardly toward the level of said base and including a lifting foot extending outwardly in alignment with said first and second ram assemblies, a lifting shoe on said lifting foot adapted to contact a jack pad on an object to be lifted, said first hydraulic ram assembly comprising a first hydraulic cylinder, a first ramming member including a first piston slidable with respect to the bore of said first cylinder and a first shaft fixed to said first piston and passing out one end of said first cylinder, said first cylinder, piston and shaft defining adjacent said one end of said first cylinder a first variable-volume annular chamber having a given cross-sectional area, said first cylinder and piston defining adjacent the other end of said first cylinder a second variable-volume chamber, said second hydraulic ram assembly comprising a second hydraulic cylinder, a second ramming member in telescoping relation with said second cylinder to define therewith a third variable-volume chamber, the variable volume of which diminishes as a straight line function of the degree of telescopic retraction of said member and said second cylinder with respect to each other, the cross-sectional area of generation of said variable volume being equal to said given cross-sectional area, conduit means connecting said first chamber and said third chamber, means for supplying hydraulic fluid to said second chamber and for relieving fluid therefrom, and means for supplying hydraulic fluid to at least one of said first and third chambers and for relieving fluid therefrom.

10. A jack comprising a base, a pair of spaced first and second vertical hydraulic ram assemblies supported on said base, an upper platen comprising a unitary structure having an inboard portion extending across said ram assemblies and tied thereto in supported relation for vertical translational movement therewith as they are elevated and retracted, said platen having a cantilever portion projecting beyond said second ram assembly in a direction away from said first ram assembly, said cantilever portion comprising a lifting foot, said first hydraulic ram assembly comprising a first hydraulic cylinder, a first ramming member including a first piston slidable with respect to the bore of said first cylinder and a first shaft fixed to said first piston and passing out one end of said first cylinder, said first cylinder, piston and shaft defining adjacent said one end of said first cylinder a first variable-volume annular chamber having a given cross-sectional area, said first cylinder and piston defining adjacent the other end of said first cylinder a second variable-volume chamber, said second hydraulic ram assembly comprising a second hydraulic cylinder, a second ramming member in telescoping relation with said second cylinder to define therewith a third

variable-volume chamber, the variable volume of which diminishes as a straight line function of the degree of telescopic retraction of said member and said second cylinder with respect to each other, the cross-sectional area of generation of said variable volume being equal to said given cross-sectional area, conduit means connecting said first chamber and said third chamber, and means for supplying hydraulic fluid to said second chamber and for relieving fluid therefrom.

11. A jack comprising a base having a downwardly facing ground engaging pad, a pair of spaced first and second vertical hydraulic ram assemblies supported on said base above said pad, means for supplying hydraulic fluid to said ram assemblies to elevate them and for relieving hydraulic fluid from said ram assemblies to accommodate retraction thereof, a hydraulic connection between said ram assemblies positively interlocking them for elevation and retraction together, a platen having an inboard portion extending across said ram assemblies and secured thereto in supported relation for vertical translational movement therewith as they are elevated and retracted, said platen having a cantilever portion extending beyond said second ram assembly in a direction away from said first ram assembly and having a load lifting foot adjacent the outer end thereof and in alignment with said ram assemblies.

12. A jack comprising a base having a downwardly facing ground engaging pad, a pair of spaced first and second vertical hydraulic ram assemblies supported on said base above said pad, means for supplying hydraulic fluid to said ram assemblies to elevate them and for relieving hydraulic fluid from said ram assemblies to accommodate retraction thereof, including a hydraulic connection between said ram assemblies positively interlocking them for elevation and retraction together, a platen having an inboard portion extending across said ram assemblies and secured thereto in supported relation for vertical translational movement therewith as they are elevated and retracted, said platen having a cantilever portion extending beyond said second ram assembly in a direction away from said first ram assembly and downwardly toward the level of said pad and having a lifting foot adjacent the outer downwardly disposed end thereof and in alignment with said ram assemblies.

13. A jack comprising a base having a downwardly facing ground engaging pad, a pair of spaced first and second vertical hydraulic ram assemblies supported on said base above said pad, a rigid platen having an inboard portion extending across said ram assemblies and secured thereto in supported relation for vertical translational movement therewith as they are elevated and retracted, said beam having a cantilever portion extending beyond one of said ram assemblies in a direction away from the other of said ram assemblies and having a load lifting foot adjacent the outer end thereof and in alignment with said ram assemblies, means for supplying hydraulic fluid to said ram assemblies to elevate them and for relieving hydraulic fluid from said ram assemblies to accommodate retraction thereof, including a hydraulic fluid supply reservoir connected to said first ram assembly for elevating the same and a hydraulic connection positively interlocking said ram assemblies for elevation and retraction together, said hydraulic connection comprising a first variable-volume chamber in said first ram assembly and a second variable-volume chamber in said second ram assembly and conduit means connecting said variable volume chambers for reversible fluid flow from one to the other, said first ram assembly including means responsive to elevation thereof for reducing the volume of said first variable volume chamber in proportion to such elevation, and said second ram assembly including means responsive to increase in the volume of said second variable-volume chamber for extending the second ram assembly in proportion to such increase in volume.

14. A jack comprising a base having a downwardly facing ground engaging pad, a pair of spaced first and second vertical hydraulic ram assemblies, supported on said base above said pad, a rigid platen having an inboard portion extending across said ram assemblies and secured thereto in supported relation for vertical translational movement therewith as they are elevated and retracted, said beam having a cantilever portion extending beyond one of said ram assemblies in a direction away from the other of said ram assemblies and having a load lifting foot adjacent the outer end thereof and in alignment with said ram assemblies, means for supplying hydraulic fluid to said ram assemblies to elevate them and for relieving hydraulic fluid from said ram assemblies to accommodate retraction thereof, including a hydraulic fluid supply reservoir connected to said first ram assembly for elevating the same and a hydraulic connection positively interlocking said ram assemblies for elevation and retraction together, said hydraulic connection being a closed constant volume system consisting of a first variable-volume chamber in said first ram assembly and a second variable-volume chamber in said second ram assembly and conduit means connecting said variable-volume chambers for reversible fluid flow from one to the other to effect expansion of either of said chambers in response to contraction of the other, said first ram assembly including means responsive to elevation thereof for contracting said first variable-volume chamber and expanding said second variable-volume chamber by equal increments, and said second ram assembly including means responsive to elevation of said first ram assembly and consequent contraction of said first variable-volume chamber and expansion of said second variable-volume chamber for elevating the second ram assembly in equal increments with elevation of the first ram assembly.

References Cited in the file of this patent

UNITED STATES PATENTS

1,400,931	Barker	Dec. 20, 1921
1,580,862	Sears et al.	Apr. 13, 1926
1,944,351	Landry	Jan. 23, 1934
2,100,445	Le Bleu	Nov. 30, 1937
2,163,959	Nilson	June 27, 1939
2,616,265	Wilson	Nov. 4, 1952