Innovation, Sciences et Développement économique Canada
Office de la Propriété Intellectuelle du Canada

Innovation, Science and Economic Development Canada
Canadian Intellectual Property Office

CA 2818876 C 2018/10/02

(11)(21) 2 818 876

(12) BREVET CANADIEN
CANADIAN PATENT

(13) C

(86) Date de dépôt PCT/PCT Filing Date: 2011/11/22
(87) Date publication PCT/PCT Publication Date: 2012/05/31
(45) Date de délivrance/Issue Date: 2018/10/02
(85) Entrée phase nationale/National Entry: 2013/05/22
(86) N° demande PCT/PCT Application No.: US 2011/061942
(87) N° publication PCT/PCT Publication No.: 2012/071464
(30) Priorité/Priority: 2010/11/22 (US61/416,042)

(51) Cl.Int./Int.Cl. *A61B 17/16* (2006.01), *A61B 17/34* (2006.01), *A61B 17/88* (2006.01)

(72) Inventeur/Inventor:
GERMAIN, AARON, US

(73) Propriétaire/Owner:
DFINE, INC., US

(74) Agent: BORDEN LADNER GERVAIS LLP

(54) Titre : SYSTEME UTILISABLE DANS LE CADRE DU TRAITEMENT DES FRACTURES VERTEBRALES
(54) Title: SYSTEM FOR USE IN TREATMENT OF VERTEBRAL FRACTURES

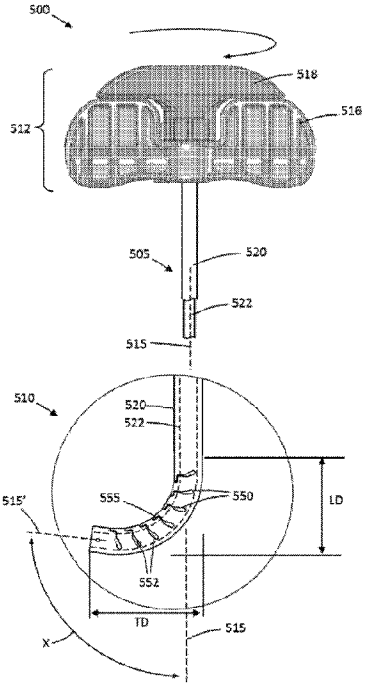

(57) Abrégé/Abstract:
Methods and devices that displace bone or other hard tissue to create a cavity in the tissue. Where such methods and devices rely on a driving mechanism for providing moving of the device to form a profile that improves displacement of the tissue. These methods and devices also allow for creating a path or cavity in bone for insertion of bone cement or other filler to treat a fracture or other condition in the bone. The features relating to the methods and devices described herein can be applied in any region of bone or hard tissue where the tissue or bone is displaced to define a bore or cavity instead of being extracted from the body such as during a drilling or ablation procedure.

(12) INTERNATIONAL APPLICATION PUBLISHED UNDER THE PATENT COOPERATION TREATY (PCT)

(19) World Intellectual Property Organization
International Bureau

(43) International Publication Date
31 May 2012 (31.05.2012)

WIPO | PCT

(10) International Publication Number
WO 2012/071464 A1

(51) International Patent Classification:
A61B 17/16 (2006.01)

(21) International Application Number:
PCT/US2011/061942

(22) International Filing Date:
22 November 2011 (22.11.2011)

(25) Filing Language: English

(26) Publication Language: English

(30) Priority Data:
61/416,042 22 November 2010 (22.11.2010) US

(71) Applicant *(for all designated States except US)*: **DFINE, INC.** [US/US]; 3047 Orchard Parkway, San Jose, California 95134 (US).

(72) Inventor; and

(75) Inventor/Applicant *(for US only)*: **GERMAIN, Aaron** [US/US]; 3563 S. Bascom Avenue, Apt. 2, Campbell, California 95008 (US).

(74) Agents: **BAGADE, Sanjay S.** et al.; Levine Bagade Han LLP, 2400 Geng Rd, Suite 120, Palo Alto, California 94303 (US).

(81) Designated States *(unless otherwise indicated, for every kind of national protection available)*: AE, AG, AL, AM, AO, AT, AU, AZ, BA, BB, BG, BH, BR, BW, BY, BZ, CA, CH, CL, CN, CO, CR, CU, CZ, DE, DK, DM, DO, DZ, EC, EE, EG, ES, FI, GB, GD, GE, GH, GM, GT, HN, HR, HU, ID, IL, IN, IS, JP, KE, KG, KM, KN, KP, KR, KZ, LA, LC, LK, LR, LS, LT, LU, LY, MA, MD, ME, MG, MK, MN, MW, MX, MY, MZ, NA, NG, NI, NO, NZ, OM, PE, PG, PH, PL, PT, QA, RO, RS, RU, RW, SC, SD, SE, SG, SK, SL, SM, ST, SV, SY, TH, TJ, TM, TN, TR, TT, TZ, UA, UG, US, UZ, VC, VN, ZA, ZM, ZW.

(84) Designated States *(unless otherwise indicated, for every kind of regional protection available)*: ARIPO (BW, GH, GM, KE, LR, LS, MW, MZ, NA, RW, SD, SL, SZ, TZ, UG, ZM, ZW), Eurasian (AM, AZ, BY, KG, KZ, MD, RU, TJ, TM), European (AL, AT, BE, BG, CH, CY, CZ, DE, DK, EE, ES, FI, FR, GB, GR, HR, HU, IE, IS, IT, LT, LU, LV, MC, MK, MT, NL, NO, PL, PT, RO, RS, SE, SI, SK,

[Continued on next page]

(54) Title: SYSTEM FOR USE IN TREATMENT OF VERTEBRAL FRACTURES

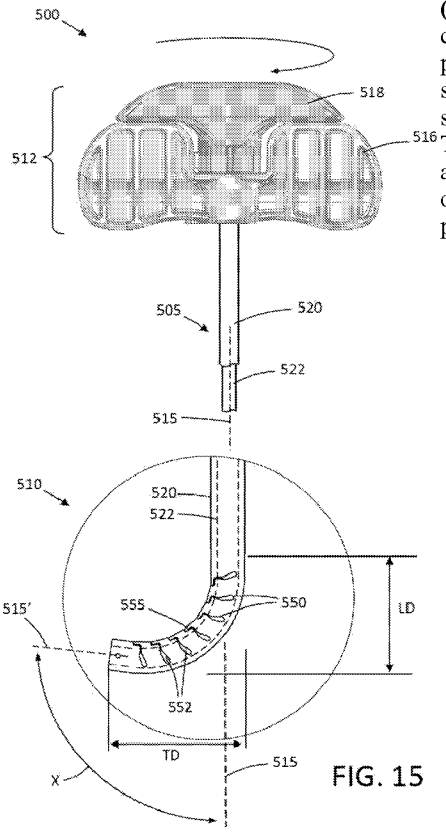

FIG. 15

(57) Abstract: Methods and devices that displace bone or other hard tissue to create a cavity in the tissue. Where such methods and devices rely on a driving mechanism for providing moving of the device to form a profile that improves displacement of the tissue. These methods and devices also allow for creating a path or cavity in bone for insertion of bone cement or other filler to treat a fracture or other condition in the bone. The features relating to the methods and devices described herein can be applied in any region of bone or hard tissue where the tissue or bone is displaced to define a bore or cavity instead of being extracted from the body such as during a drilling or ablation procedure.

WO 2012/071464 A1

WO 2012/071464 A1

SM, TR), OAPI (BF, BJ, CF, CG, CI, CM, GA, GN, GQ, GW, ML, MR, NE, SN, TD, TG).

Declarations under Rule 4.17:

— *as to applicant's entitlement to apply for and be granted a patent (Rule 4.17(ii))*

— *as to the applicant's entitlement to claim the priority of the earlier application (Rule 4.17(iii))*

Published:

— *with international search report (Art. 21(3))*

SYSTEM FOR USE IN TREATMENT OF VERTEBRAL FRACTURES

FIELD OF THE INVENTION

[0001] This invention relates to medical instruments and systems for creating a path or cavity in vertebral bone to receive bone cement to treat a vertebral compression fracture. The features relating to the methods and devices described herein can be applied in any region of bone or hard tissue where the tissue or bone is displaced to define a bore or cavity instead of being extracted from the body such as during a drilling or ablation procedure. In addition, the present invention also discloses methods and devices for ablating or coagulating tissues, including but not limited to ablating tumor tissue in vertebral and/or cortical bone.

SUMMARY OF THE INVENTION

[0002] Methods and devices described herein relate to improved creation of a cavity within bone or other hard tissue where the cavity is created by displacement of the tissue. In a first example, a method according to the present disclosure includes treating a vertebral body or other bone structure. In one variation, the method includes providing an elongate tool having a sharp tip configured for penetration into vertebral bone, the tool having an axis extending from a proximal end to a working end thereof, where the working end comprises at least a first sleeve concentrically located within a second sleeve and a third sleeve located concentrically about the second sleeve, where each sleeve comprises a series of slots or notches to limit deflection of the working end to a first curved configuration in a single plane and where the respective series of slots or notches are radially offset in each sleeve; advancing the working end through vertebral bone; causing the working end to move from a linear configuration to a curved configuration by translating the first sleeve relative to the second sleeve in an axial direction; and moving the working end in the curved configuration within the bone to create a cavity therein. Translating of the first sleeve relative to the second sleeve can include moving either sleeve or both sleeves in an axial direction. Additional variations include moving one or both sleeves in a rotational direction to produce relative axial displacement between sleeves.

[0003] In an additional variation, the present devices include medical osteotome devices that can for treat a hard tissue (e.g., in a vertebral body) by mechanically displacing the hard tissue and/or applying therapeutic energy to ablate or coagulate tissue. For example, one such variation

includes an osteotome type device that is coupled to a power supply and further includes a handle having an actuating portion and a connector for electrically coupling the osteotome device to the power supply; a shaft comprising a first sleeve located concentrically within a second sleeve, the shaft having a distal portion comprising a working end capable of moving between a linear configuration and an articulated configuration where the articulated configuration is limited to a single plane, and where each sleeve comprises a series of slots or notches to limit deflection of the working end to the articulated configuration, where the respective series of slots or notches are radially offset in adjacent sleeves, where a first conductive portion of the shaft is electrically coupleable to a first pole of the power supply; a sharp tip located at a distal tip of the first sleeve of the working end, the sharp tip adapted to penetrate bone within the vertebral body, where the distal tip is coupleable to a second pole of the power supply, such that when activated, current flows between a portion of the distal tip and the shaft; a non-conductive layer electrically isolating the first sleeve from the first conductive portion; and where the shaft and sharp tip have sufficient column strength such that application of an impact force on the handle causes the distal portion of the shaft and the distal tip to mechanically displace the hard tissue. The power supply can be coupled to the outer sleeve (either the second or third sleeve discussed herein.)

[0004] Another variations of the method disclosed herein can include the application of energy between electrodes on the device to ablate tissues (e.g., tumor) or to perform other electrosurgical or mapping procedures within the tissue. In one such example for treating a vertebral body, the method can include providing an elongate tool having a sharp tip configured for penetration into vertebral bone, the tool having an axis extending from a proximal end to a working end thereof, where the working end comprises at least a first sleeve concentrically located within a second sleeve, where each sleeve comprises a series of slots or notches to limit deflection of the working end to a first curved configuration in a single plane and where the respective series of slots or notches are radially offset in adjacent sleeves, where a first conductive portion of the first sleeve is electrically coupled to a first pole of a power supply; advancing the working end through vertebral bone; causing the working end to move from a linear configuration to a curved configuration by translating the first sleeve relative to the second sleeve in an axial direction; and applying energy between the first conductive portion and a return electrode electrically coupled to a second pole of the energy supply to ablate or coagulate a region within the vertebral body.

[0005] In variations of the method, moving the working end to from the linear configuration to the curved configuration can include moving the working end to move through a plurality of curved configurations.

[0006] In an additional variation, causing the working end to move from a linear configuration to the curved configuration comprises actuating a handle mechanism to move the working end from the linear configuration to the curved configuration. The handle mechanism can be moved axially and/or rotationally as described herein.

[0007] In one variation, actuating of the handle mechanism causes the working end to move to the first curved configuration without torquing the third sleeve.

[0008] In additional variations, the working end of the osteotome or tool is spring biased to assume the linear configuration.

[0009] The working end can move from the linear configuration to the curved configuration by applying a driving force or impact to the elongate tool wherein penetration in the cortical bone moves the working end from the linear configuration to the curved configuration. For example, as a hammering or impact force is applied to the working end, the interaction of the sharp tip against bone causes the working end to assume an articulated and/or curved configuration. Where further axial movement of the tool causes compression of the bone and creation of the cavity.

[0010] The method can further include the use of one or more cannulae to introduce the tool into the target region. Such a cannula can maintain the tool in a straight or linear configuration until the tool advances out of the cannula or until the cannula is withdrawn from over the tool.

[0011] As described herein, upon creation of the cavity, the method can further include the insertion of a filler material or other substance into the cavity. The filler material can be delivered through the tool or through a separate cannula or catheter.

[0012] This disclosure also includes variations of devices for creating a cavity within bone or hard tissue. Such variations include devices for treating a vertebral body or other such structure. In one variation a device includes a handle having an actuating portion; a shaft comprising a first sleeve located concentrically within a second sleeve and a third sleeve located concentrically about the second sleeve, the shaft having a distal portion comprising a working end capable of moving between a linear configuration and an articulated configuration where the second articulated configuration is limited to a single plane, and where each sleeve comprises a series of slots or notches to limit deflection of the working end to the articulated configuration, where the respective

series of slots or notches are radially offset in each sleeve; and a sharp tip located at a distal tip of the working end, the sharp tip adapted to penetrate vertebral bone within the vertebral body.

[0013] In one variation, the devices described herein can include a configuration where the first sleeve is affixed to the second sleeve at the working end such that proximal movement of the first sleeve causes the working end to assume the articulated configuration. The sleeves can be affixed at any portion along their length via a mechanical fixation means (e.g., a pin or other fixation means), an adhesive, or one or more weld points. In some variations, fixation of the sleeves occurs at the working end so that movement of the inner or first sleeve causes the working end to assume the curved configuration. In some cases, the third sleeve can be affixed outside of the working end so long as when the first and second sleeves articulate, the third sleeve still articulates.

[0014] Devices described herein can optionally include a force-limiting assembly coupled between the actuating portion and the first sleeve such that upon reaching a threshold force, the actuating portion disengages the first sleeve. In one variation, the force-limiting mechanism is adapted to limit force applied to bone when moving the working end from the first configuration toward the second configuration.

[0015] In additional variations, devices for creating cavities in bone or hard tissue can include one or more spring elements that extending through the first sleeve, where the spring element is affixed to the shaft (within or about either the first, second, or third sleeve). Such spring elements cause the working end to assume a linear configuration in a relaxed state.

[0016] In additional variations, a device can include an outer or third sleeve where the slots or notches (that allow deflection) are located on an exterior surface of the third sleeve. The exterior surface is typically the surface that faces outward from a direction of the curved configuration. This configuration allows for an interior surface (the surface located on the interior of the curved portion) to be smooth. As a result, if the device is withdrawn through tissue or a cannula or other introducer, the smooth surface on the interior of the curve minimizes the chance that the device becomes caught on the opening of the cannula or any other structure.

[0017] Variations of the device can include one or more lumens that extend through the shaft and working end. These lumens can exit at a distal tip of the device or through a side opening in a wall of the device. The lumen can include a surface comprising a lubricious polymeric material. For example, the material can comprise any bio-compatible material having low frictional properties (e.g., TEFLON®, a polytetrafluroethylene (PTFE), FEP (Fluorinated ethylenepropylene),

polyethylene, polyamide, ECTFE (Ethylenechlorotrifluoro-ethylene), ETFE, PVDF, polyvinyl chloride and silicone).

[0018] As described herein, the devices can include any number of configurations to prevent rotation between adjacent sleeves but allow axial movement between the sleeves. For example, the sleeves can be mechanically coupled via a pin/slot or key/keyway configuration. In an additional variation, the sleeves can be non-circular to prevent rotation.

[0019] In an additional variation, the disclosure includes various kits comprising the device described herein as well as a filler material (e.g., a bone cement or other bone filler material).

[0020] Variations of the access device and procedures described above include combinations of features of the various embodiments or combination of the embodiments themselves wherever possible.

BRIEF DESCRIPTION OF DRAWINGS

[0021] FIG. 1 is a plan view of an osteotome of the invention.

[0022] FIG. 2 is a side view of the osteotome of FIG. 1.

[0023] FIG. 3 is a cross sectional view of the osteotome of FIG. 1.

[0024] FIG. 4 is an enlarged sectional view of the handle of the osteotome of FIG. 1.

[0025] FIG. 5 is an enlarged sectional view of the working end of the osteotome of FIG. 1.

[0026] FIG. 6A is a sectional view of the working end of FIG. 5 in a linear configuration.

[0027] FIG. 6B is a sectional view of the working end of FIG. 5 in a curved configuration.

[0028] FIGS. 7A-7C are schematic sectional views of a method of use of the osteotome of FIG. 1.

[0029] FIG. 8 is another embodiment of an osteotome working end.

[0030] FIG. 9 is another embodiment of an osteotome working end.

[0031] FIG. 10 is another variation of an osteotome with an outer sleeve.

[0032] FIG. 11 is a cut-away view of the working end of the osteotome of FIG. 10.

[0033] FIG. 12A is sectional view of another embodiment of working end, taken along line 12A-12A of FIG. 11.

[0034] FIGS. 12B and 12C illustrate additional variations of preventing rotation between adjacent sleeves.

[0035] FIG. 13 is sectional view of another working end embodiment similar to that of FIG. 11.

[0036] FIG. 14 is a cut-away perspective view of the working end of FIG. 13.

[0037] FIG. 15 illustrates another embodiment of an osteotome as described herein that has a distal working end that is configured for deformation resistance when used in very hard cancellous bone.

[0038] FIG. 16 illustrates an osteotome device as shown in FIG. 15 with a torque-limiting mechanism built into a handle portion.

[0039] FIG. 17 illustrates a de-mated slotted sleeve of the device of FIG. 15 wherein the slots are configured to resist radial deformation of the working end when articulated.

[0040] FIGS. 18A and 18B illustrate first and second concentric slotted sleeves of the device of FIG. 15 from different sides to illustrate the configuration of the slots.

[0041] FIG. 18C illustrates a sleeve configuration with arcuate slots and a radial slot.

[0042] FIGS. 19A-19C are enlarged schematic views the working end of the osteotome of FIG. 15 illustrating the progressive application of force would be applied by the working end to cancellous bone, wherein the force application progresses over different axial portions of the working end as it articulates.

[0043] FIGS. 20A-20B show the distal end of a prior art stylet with a hinged distal tip that is used to treat cancellous bone; FIG. 19A showing the working end in a linear shape for insertion into bone; FIG. 19B showing the working end in an articulated shape for creating a space in bone having a certain area.

[0044] FIG. 21 is a view of the working end of FIGS. 15 and 19A-19C illustrating the width and volume of displaced cancellous bone caused by articulation of the working end.

[0045] FIG. 22 is a view of the working end of FIGS. 15 and 19A-19C illustrating the volume of displaced cancellous bone caused by articulation and rotation of the working end.

[0046] FIG. 23 is a view of the prior art stylet working end of FIGS. 20A-20B depicting the limited volume of cancellous bone that ca be displaced by articulation and rotation of the prior art device.

DETAILED DESCRIPTION

[0047] Referring to FIGS. 1-5, an apparatus or osteotome 100 is shown that is configured for accessing the interior of a vertebral body and for creating a pathway in vertebral cancellous bone to receive bone cement. In one embodiment, the apparatus is configured with an extension portion or member 105 for introducing through a pedicle and wherein a working end 110 of the extension member can be progressively actuated to curve a selected degree and/or rotated to create a curved

pathway and cavity in the direction of the midline of the vertebral body. The apparatus can be withdrawn and bone fill material can be introduced through a bone cement injection cannula. Alternatively, the apparatus 100 itself can be used as a cement injector with the subsequent injection of cement through a lumen 112 of the apparatus.

[0048] In one embodiment, the apparatus 100 comprises a handle 115 that is coupled to a proximal end of the extension member 105. The extension member 105 comprises an assembly of first (outer) sleeve 120 and a second (inner) sleeve 122, with the first sleeve 120 having a proximal end 124 and distal end 126. The second sleeve 122 has a proximal end 134 and distal end 136. The extension member 105 is coupled to the handle 115, as will be described below, to allow a physician to drive the extension member 105 into bone while contemporaneously actuating the working end 110 into an actuated or curved configuration (see FIG. 6). The handle 115 can be fabricated of a polymer, metal or any other material suitable to withstand hammering or impact forces used to drive the assembly into bone (e.g., via use of a hammer or similar device on the handle 115). The inner and outer sleeves are fabricated of a suitable metal alloy, such as stainless steel or NiTi. The wall thicknesses of the inner and outer sleeves can range from about 0.005" to 0.010" with the outer diameter the outer sleeve ranging from about 2.5 mm to 5.0 mm.

[0049] Referring to FIGS. 1, 3 and 4, the handle 115 comprises both a first grip portion 140 and a second actuator portion indicated at 142. The grip portion 140 is coupled to the first sleeve 120 as will be described below. The actuator portion 142 is operatively coupled to the second sleeve 122 as will be described below. The actuator portion 142 is rotatable relative to the grip portion 140 and one or more plastic flex tabs 145 of the grip portion 140 are configured to engage notches 146 in the rotatable actuator portion 142 to provide tactile indication and temporary locking of the handle portions 140 and 142 in a certain degree of rotation. The flex tabs 145 thus engage and disengage with the notches 146 to permit ratcheting (rotation and locking) of the handle portions and the respective sleeve coupled thereto.

[0050] The notches or slots in any of the sleeves can comprise a uniform width along the length of the working end or can comprise a varying width. Alternatively, the width can be selected in certain areas to effectuate a particular curved profile. In other variation, the width can increase or decrease along the working end to create a curve having a varying radius. Clearly, it is understood that any number of variations are within the scope of this disclosure.

[0051] FIG. 4 is a sectional view of the handle showing a mechanism for actuating the second inner sleeve 122 relative to the first outer sleeve 120. The actuator portion 142 of the handle 115 is

configured with a fast-lead helical groove indicated at 150 that cooperates with a protruding thread 149 of the grip portion 140 of the handle. Thus, it can be understood that rotation of the actuation portion 142 will move this portion to the position indicated at 150 (phantom view). In one embodiment, when the actuator portion 142 is rotated a selected amount from about 45° to 720°, or from about 90° to 360°, the inner sleeve 122 is lifted proximally relative to the grip portion 140 and outer sleeve 120 to actuate the working end 110. As can be seen in FIG. 4 the actuator portion 142 engages flange 152 that is welded to the proximal end 132 of inner sleeve 122. The flange 152 is lifted by means of a ball bearing assembly 154 disposed between the flange 152 and metal bearing surface 155 inserted into the grip portion 140 of the handle. Thus, the rotation of actuator 142 can lift the inner sleeve 122 without creating torque on the inner sleeve.

[0052] Now turning to FIGS. 5, 6A and 6B, it can be seen that the working end 110 of the extension member 105 is articulated by cooperating slotted portions of the distal portions of outer sleeve 120 and inner sleeve 122 that are both thus capable of bending in a substantially tight radius. The outer sleeve 120 has a plurality of slots or notches 162 therein that can be any slots that are perpendicular or angled relative to the axis of the sleeve. The inner sleeve 122 has a plurality of slots or notches indicated at 164 that can be on an opposite side of the assembly relative to the slots 162 in the outer sleeve 120. The outer and inner sleeves are welded together at the distal region indicated at weld 160. It thus can be understood that when inner sleeve 122 is translated in the proximal direction, the outer sleeve will be flexed as depicted in FIG. 6B. It can be understood that by rotating the actuator handle portion 142 a selected amount, the working end can be articulated to a selected degree.

[0053] FIG. 4, 5, 6A and 6B further illustrate another element of the apparatus that comprises a flexible flat wire member 170 with a proximal end 171 and flange 172 that is engages the proximal side of flange 152 of the inner sleeve 122. At least the distal portion 174 of the flat wire member 170 is welded to the inner sleeve at weld 175. This flat wire member thus provides a safety feature to retain the working end in the event that the inner sleeve fails at one of the slots 164.

[0054] Another safety feature of the apparatus comprises a torque limiter and release system that allows the entire handle assembly 115 to freely rotate—for example if the working end 110 is articulated, as in FIG. 6B, when the physician rotates the handle and when the working end is engaged in strong cancellous bone. Referring to FIG. 4, the grip portion 142 of the handle 115 engages a collar 180 that is fixed to a proximal end 124 of the outer sleeve 120. The collar 180 further comprises notches 185 that are radially spaced about the collar and are engaged by a ball

member 186 that is pushed by a spring 188 into notches 185. At a selected force, for example a torque ranging from greater than about 0.5 inch*lbs but less that about 7.5 inch*lbs, 5.0 inch*lbs or 2.5 inch*lbs, the rotation of the handle 115 overcomes the predetermined limit. When the torque limiter assembly is in its locked position, the ball bearing 186 is forced into one of the notches 185 in the collar 180. When too much torque is provided to the handle and outer sleeve, the ball bearing 186 disengages the notch 185 allowing the collar 180 to turn, and then reengages at the next notch, releasing anywhere from 0.5 inch*lbs to 7.5 inch*lbs of torque.

[0055] Referring to FIGS. 6A and 6B, it can be understood that the inner sleeve 122 is weakened on one side at its distal portion so as to permit the inner sleeve 122 to bend in either direction but is limited by the location of the notches in the outer sleeve 120. The curvature of any articulated configuration is controlled by the spacing of the notches as well as the distance between each notch peak. The inner sleeve 122 also has a beveled tip for entry through the cortical bone of a vertebral body. Either the inner sleeve or outer sleeve can form the distal tip.

[0056] Referring to FIGS. 7A-7C, in one variation of use of the device, a physician taps or otherwise drives a stylet 200 and introducer sleeve 205 into a vertebral body 206 typically until the stylet tip 208 is within the anterior 1/3 of the vertebral body toward cortical bone 210 (FIG. 7A). Thereafter, the stylet 200 is removed and the sleeve 205 is moved proximally (FIG. 7B). As can be seen in FIG. 7B, the tool or osteotome 100 is inserted through the introducer sleeve 205 and articulated in a series of steps as described above. The working end 110 can be articulated intermittently while applying driving forces and optionally rotational forces to the handle 115 to advance the working end through the cancellous bone 212 to create path or cavity 215. The tool is then tapped to further drive the working end 110 to, toward or past the midline of the vertebra. The physician can alternatively articulate the working end 110, and drive and rotate the working end further until imaging shows that the working end 100 has created a cavity 215 of an optimal configuration. Thereafter, as depicted in FIG. 7C, the physician reverses the sequence and progressively straightens the working end 110 as the extension member is withdrawn from the vertebral body 206. Thereafter, the physician can insert a bone cement injector 220 into the path or cavity 215 created by osteotome 100. FIG. 7C illustrates a bone cement 222, for example a PMMA cement, being injected from a bone cement source 225.

[0057] In another embodiment (not shown), the apparatus 100 can have a handle 115 with a Luer fitting for coupling a bone cement syringe and the bone cement can be injected through the lumen 112 of the apparatus. In such an embodiment FIG. 9, the lumen can have a lubricious surface

layer or polymeric lining 250 to insure least resistance to bone cement as it flows through the lumen. In one embodiment, the surface or lining 250 can be a fluorinated polymer such as TEFLON® or polytetrafluroethylene (PTFE). Other suitable fluoropolymer resins can be used such as FEP and PFA. Other materials also can be used such as FEP (Fluorinated ethylenepropylene), ECTFE (Ethylenechlorotrifluoro-ethylene), ETFE, Polyethylene, Polyamide, PVDF, Polyvinyl chloride and silicone. The scope of the invention can include providing a polymeric material having a static coefficient of friction of less than 0.5, less than 0.2 or less than 0.1.

[0058] FIG. 9 also shows the extension member or shaft 105 can be configured with an exterior flexible sleeve indicated at 255. The flexible sleeve can be any commonly known biocompatible material, for example, the sleeve can comprise any of the materials described in the preceding paragraph.

[0059] As also can be seen in FIG. 9, in one variation of the device 100, the working end 110 can be configured to deflect over a length indicated at 260 in a substantially smooth curve. The degree of articulation of the working end 100 can be at least 45°, 90°, 135° or at least 180° as indicated at 265 (FIG. 9). In additional variations, the slots of the outer 120 and inner sleeves 120 can be varied to produce a device having a radius of curvature that varies among the length 260 of the device 100.

[0060] In another embodiment of the invention, the inner sleeve can be spring loaded relative the outer sleeve, in such a way as to allow the working end to straighten under a selected level of force when pulled in a linear direction. This feature allows the physician to withdraw the assembly from the vertebral body partly or completely without further rotation the actuating portion 142 of handle 115. In some variations, the force-limiter can be provided to allow less than about 10 inch*lbs of force to be applied to bone.

[0061] In another embodiment shown in FIG. 8, the working end 110 is configured with a tip 240 that deflects to the position indicated at 240' when driven into bone. The tip 240 is coupled to the sleeve assembly by resilient member 242, for example a flexible metal such as stainless steel or NiTi. It has been found that the flexing of the tip 240 causes its distal surface area to engage cancellous bone which can assist in deflecting the working end 110 as it is hammered into bone.

[0062] In another embodiment of the invention (not shown), the actuator handle can include a secondary (or optional) mechanism for actuating the working end. The mechanism would include a hammer-able member with a ratchet such that each tap of the hammer would advance assembly and progressively actuate the working end into a curved configuration. A ratchet mechanism as known

in the art would maintain the assembly in each of a plurality of articulated configurations. A release would be provided to allow for release of the ratchet to provide for straightening the extension member 105 for withdrawal from the vertebral body.

[0063] FIGS. 10 and 11 illustrate another variation of a bone treatment device 400 with a handle 402 and extension member 405 extending to working end 410 having a similar construction to that FIGS. 1 to 6B. The device 400 operates as described previously with notched first (outer) sleeve 120 and cooperating notched second (inner) sleeve 122. However, the variation shown in FIGS. 10 and 11 also includes a third concentric notched sleeve 420, exterior to the first 120 and second 122 sleeves. The notches or slots in sleeve 420 at the working end 410 permit deflection of the sleeve as indicated at 265 in FIG. 11.

[0064] FIG. 10 also illustrates the treatment device 400 as including a luer fitting 412 that allows the device 402 to be coupled to a source of a filler material (e.g., a bone filler or bone cement material). The luer can be removable from the handle 402 to allow application of an impact force on the handle as described above. Moreover, the luer fitting 402 can be located on the actuating portion of the handle, the stationary part of the handle or even along the sleeve. In any case, variations of the device 400 permit coupling the filler material with a lumen extending through the sleeves (or between adjacent sleeves) to deposit filler material at the working end 410. As shown by arrows 416, filler material can be deposited through a distal end of the sleeves (where the sharp tip is solid) or can be deposited through openings in a side-wall of the sleeves. Clearly, variations of this configuration are within the scope of those familiar in the field.

[0065] In some variations, the third notched sleeve 420 is configured with its smooth (non-notched) surface 424 disposed to face inwardly on the articulated working end (FIG. 11) such that a solid surface forms the interior of the curved portion of the working end 410. The smooth surface 424 allows withdrawal of the device 110 into a cannula or introducer 205 without creating a risk that the slots or notches become caught on a cannula 205 (see e.g., FIG. 7B).

[0066] As shown in FIGS. 10-11, the third (outermost) sleeve 420 can extend from an intermediate location on the extension member 405 to a distal end of the working end 410. However, variations of the device include the third sleeve 420 extending to the handle 402. However, the third sleeve 420 is typically not coupled to the handle 402 so that any rotational force or torque generated by the handle 402 is not directly transmitted to the third sleeve 420.

[0067] In one variation, the third sleeve 420 is coupled to the second sleeve 120 at only one axial location. In the illustrated example shown in FIG. 11, the third sleeve 420 is affixed to second

sleeve 420 by welds 428 at the distal end of the working end 410. However, the welds or other attachment means (e.g., a pin, key/keyway, protrusion, etc.) can be located on a medial part of the sleeve 420. The sleeve 420 can be fabricated of any bio-compatible material. For example, in one variation, the third sleeve is fabricated form a 3.00 mm diameter stainless steel material with a wall thickness of 0.007". The first, second and third sleeves are sized to have dimensions to allow a sliding fit between the sleeves.

[0068] FIG. 12A is a sectional view of extension member 405 of another variation, similar to that shown in FIGS. 10-11. However, the variation depicted by FIG. 12A comprises non-round configurations of concentric slidable sleeves (double or triple sleeve devices). This configuration limits or prevents rotation between the sleeves and allows the physician to apply greater forces to the bone to create a cavity. While FIG. 12A illustrates an oval configuration, any non-round shape is within the scope of this disclosure. For example, the cross-sectional shape can comprise a square, polygonal, or other radially keyed configuration as shown in FIGS. 12B and 12C. As shown in FIG. 12C the sleeves can include a key 407 and a receiving keyway 409 to prevent rotation but allow relative or axial sliding of the sleeves. The key can comprise any protrusion or member that slides within a receiving keyway. Furthermore, the key can comprise a pin or any raised protrusion on an exterior or interior of a respective sleeve. In this illustration, only the first 122 and second 120 sleeves are illustrated. However, any of the sleeves can be configured with the key/keyway. Preventing rotation between sleeves improves the ability to apply force to bone at the articulated working end.

[0069] FIGS. 13-14 illustrate another variation of a working end 410 of an osteotome device. In this variation, the working end 410 includes one or more flat spring elements 450, 460a, 460b, 460c, 460d, that prevent relative rotation of the sleeves of the assembly thus allowing greater rotational forces to be applied to cancellous bone from an articulated working end. The spring elements further urge the working end assembly into a linear configuration. To articulate the sleeves, a rotational force is applied to the handle as described above, once this rotational force is removed, the spring elements urge the working end into a linear configuration. As shown in FIG. 13, one or more of the spring elements can extend through the sleeves for affixing to a handle to prevent rotation. Furthermore, the distal end 454 of flat spring element 450 is fixed to sleeve assembly by weld 455. Thus, the spring element is fixed at each end to prevent its rotation. Alternate variations include one or more spring elements being affixed to the inner sleeve assembly at a medial section of the sleeve.

[0070] As shown in FIGS. 13-14, variations of the osteotome can include any number of spring elements 460a-460d. These additional spring elements 460a-460d can be welded at either a proximal or distal end thereof to an adjacent element or a sleeve to allow the element to function as a leaf spring.

[0071] FIGS. 15-16 illustrate another embodiment of an osteotome 500 with shaft assembly 505 having an articulating working end 510 that is designed to provide especially high strength and thus is adapted for use in dense, hard cancellous bone. In one aspect, the working end 510 exhibits high strength in applying high forces capable of displacing dense cancellous bone as the working end is moved from a linear insertion shape towards an articulated, non-linear shape. In a second aspect, the working end 510 exhibits high strength in resisting radial deformation when the articulated working end articulates to displace dense cancellous bone.

[0072] In FIG. 15, it can be seen that handle 512 is coupled to the shaft assembly 505 that extends about an indicated at 515. The first handle portion or body 516 and the rotatable actuator or second handle body 518 function as described in previous embodiments to articulate the working end 510 and axis 515 from a linear configuration to a curved configuration. FIGS. 15 and 16 show that the first handle body 516 is coupled to outer sleeve 520 of the shaft assembly 505 and the second handle body 518 is coupled to inner sleeve 522.

[0073] FIG. 16 is a sectional view of handle 512 again showing the mechanism for actuating the second inner sleeve 522 relative to the first outer sleeve 520, wherein the first and second handle bodies 516 and 518 are mated along a fast-lead helical thread 526. Thus, rotation of handle body 518 from about 45° to 90° will lift or translate the inner sleeve 522 axially relative to the outer sleeve 520 to articulate the working end 510. As can be seen in FIG. 16 the second handle body 518 engages flange 528 that is welded or otherwise joined to the proximal end 532 of inner sleeve 522. In this embodiment, a torque limiting mechanism is provided in handle 512 which comprises a ball 535 that is urged by spring 536 into a detent 538 in metal collar 540 that is fixedly coupled to handle body 516. A set screw 542 is provided to adjust the force at which the torque-release mechanism will release under rotation of the handle. The re-settable torque release mechanism is set to release at a minimum of 8 inch*lbs of torque. In one embodiment, the release is set at 8 inch*lbs of torque, 10 inch*lbs of torque or 12 inch*lbs of torque.

[0074] In FIG. 15, it can be seen that the working end 510 is configured with a series of slots 550 in the first and second sleeves 520 and 522 that allow for articulation of the assembly. The slots 550 are provided in both sleeves and can range in number from about 5 to 20. However, additional

variations of the device can include any number of slots in either sleeve. This variation also illustrates slots that have an arcuate configuration rather than being a simple radial slot is shown in previous embodiments. In one variation, the slots 550 each have a first radial slot portion 552 that extends substantially radially about a sleeve 520 or 522 and a second axial slot portion 555 that extends substantially axially in a sleeve 520 or 522.

[0075] FIG. 17 shows an outer sleeve 520 de-mated from the shaft assembly 505 to more particularly depict the dimensions and features of arcuate slots 550. In this variation, the arcuate slots 550 are also configured as a 'keyed' or interlocking features wherein one slot edge comprises a projecting 'key' element 560 that slides into and engages a key-receiving shape 562 of the opposing slot edge when the sleeve is articulated. Thus, the interlocking projecting and receiving features 560 and 562 provide the shaft assembly 505 with significantly increased strength in resisting deformation when the working end is rotated in dense cancellous bone. The arcuate slots 550 as depicted in FIG. 17 can be provided in either the outer sleeve 520, the inner sleeve 522 or both sleeves. Also, either or both sleeves can include any combination of arcuate and radial slots in the same sleeve. Alternatively, a cooperating sleeve without the arcuate slots 550 of FIG. 17 can have radially-oriented slots as described in earlier embodiments. The radial oriented slots, as shown previously, comprise slots that extend about a portion of the circumference of the sleeve. Where each radial oriented slot is typically within a plane is perpendicular to an axis of the sleeve (when straight). An arcuate slot, also is located about a portion of the circumference of the sleeve but is not limited to within a plane that is perpendicular to an axis of the sleeve. As shown in Fig. 18B, the arcuate slots are angled when viewed from a side of the device. In certain additional variations, a sleeve can include both arcuate slots and radial slots as shown in Fig. 18C. The arcuate shaped slots can also be referred to as axial oriented slots as the direction of the slot is parallel or angled from an axis of the sleeve while a radial oriented slot is perpendicular to an axis of the sleeve. Such a combination of slots can be provided on any sleeve (an inner sleeve, an outer sleeve, or both sleeves).

[0076] FIG. 18A is a plan view of inner sleeve 522 de-mated from shaft assembly 505 and again shows the arcuate slots 550 with interlocking projecting and receiving features 560 and 562. In FIG. 18B, it can be seen that on shaft assembly 505 includes arcuate slots 550 in both sleeves. The slot can be aligned or non-aligned when the working end is in a linear position. The distal ends of the shafts can be coupled together by a press-fit pins inserted into holes 566 in the sleeves (FIG. 17) or by any other suitable fastening means such as welding.

[0077] In another aspect of the invention best seen in FIGS. 17 and 18A, the arcuate slots 550 have a varied width, again for providing greater resistance to torsional, twisting or radial deformation when in use. In one embodiment, the slot width A on the axially-extending slot portions 555 along the sides 570a and 570b of the projecting feature 560 is less than the slot width R on the radial-extending slot portion 552 adjacent the end surface 572 of projecting feature 560. Referring to FIGS. 18A, 18B and 20, it can be understood how the keyed featured 560 and 562 will mesh and interlock when the working end is articulated and thus resist deformation under twisting loads. In one embodiment, the axial slot portions 555 have a width A of less than .010", 008" or .006". In such an embodiment, the said radial slot portions 552 have a width R that greater than .006", 008" or .010". Such slot can be cut by a laser cutter as is known in the art.

[0078] Referring back to FIG. 15, the working end 510 is adapted for providing a sharp, tight radius curvature which is desirable in an osteotome 500 used in a vertebral body. In one embodiment, the transverse dimension TD of the working end 510 in the fully articulated position is at least 10 mm. Further, the working end 510 is capable of articulation such that the linear axis 515 is deflected at least 90° to axis 515' as depicted in FIG. 15. In one embodiment, the deflectable shaft portion has a length dimension LD of 12 mm or less in its linear shape (FIG. 15) and is capable of articulation to provide a maximum transverse dimension TD of at least 10 mm and further articulate the axis 515 at least 90°. In general, the working end has a deflectable shaft portion that provides a ratio of at least 0.8:1 of the maximum transverse dimension TD relative to the length dimension LD of the deflecting shaft portion.

[0079] Now referring to FIGS. 19A-19C, another aspect of the invention relates to the level of forces that can be applied to bone when articulating the working end 510, without regard to rotation of the articulated working end. In one embodiment as depicted in FIGS. 15-19C, movement of the working end toward the articulated configuration can apply at least 30 lbs. force to cancellous bone, or at least 50 lbs. force to bone or at least 70 lbs. force to bone. Still referring to FIGS. 19A-19C, another aspect of the invention relates to the manner is which forces are applied to bone when the working end is progressively articulated and in which there is not single hinge point around which the working end pivots. As the plurality of slots close together, they do so in a sequential manner to progressively articulate the working end. FIGS. 19A-19C illustrate that maximum forces are applied at the distal tip of the device in a progressive manner as first the most distal portion of the shaft articulates, then an adjacent proximal portion of the shaft articulated an so forth. This aspect of the working end differs greatly from the prior art stylet device and working end 580 of FIGS.

20A-20B, wherein the stylet tip 582 is actuated by pull rod 584 which caused the tip 582 to swing around a single pivot point 585 which thus loads the entire elongated surface 588 of the stylet tip 582. It can be understood that device of FIGS. 19A-19C which provide a progressive, sequential application of force over discrete articulating portions can displace cancellous bone far more effectively with a small diameter tool than hinge-type device as in FIG. 20B which cannot apply forces progressively and sequentially over the articulating surface.

[0080] FIG. 21 depicts another aspect of the invention wherein it can be seen that working end 510 can be progressively articulated to displace a path in cancellous bone having a width W. In other words, the width W is equal to the diameter of the working end 510. In contrast, the prior art device of FIG. 20B can typically only displace a path in cancellous bone having a width X, which is less that the diameter of the tool.

[0081] FIGS. 22 and 23 illustrate another aspect of the invention wherein the working end when rotated can displace a much greater volume of cancellous bone that the prior art device of FIGS. 20A-20B. In FIG. 22, it can be seen that rotation of working 510 as it is articulated can great a very large displaced volume Y of cancellous bone compared to the volume Z that could potentially be displaced by the working end 580 of FIGS. 20A-20B.

[0082] Although particular embodiments of the present invention have been described above in detail, it will be understood that this description is merely for purposes of illustration and the above description of the invention is not exhaustive. Specific features of the invention are shown in some drawings and not in others, and this is for convenience only and any feature may be combined with another in accordance with the invention. A number of variations and alternatives will be apparent to one having ordinary skills in the art. Such alternatives and variations are intended to be included within the scope of the claims. Particular features that are presented in dependent claims can be combined and fall within the scope of the invention. The invention also encompasses embodiments as if dependent claims were alternatively written in a multiple dependent claim format with reference to other independent claims.

CLAIMS:

1. A medical device for treating hard tissue by mechanically displacing the hard tissue, the medical device comprising:

a handle including an actuator mechanism the handle configured to receive an impact force;

a shaft coupled to the handle, the shaft having an axis and comprising a plurality of concentric sleeves with distal portions, each sleeve configured with a respective series of slots to provide actuation of a working end of the shaft between a linear configuration and an articulated configuration;

wherein at least a plurality of slots are configured with substantially radial and axially oriented openings that when closed increase resistance to torsion of the working end of the shaft; and

a tip configured to deflect in the direction of the articulated configuration when the impact force drives the tip into the hard tissue.

2. The medical device of claim 1, wherein the articulated configuration is limited to a single plane.

3. The medical device of claim 2, wherein the working end in the articulated configuration is rotatable relative to the handle.

4. The medical device of claim 2, wherein the working end in the articulated configuration is rotatable for mechanically displacing bone; and wherein the handle includes a handle-shaft torque release mechanism.

5. The medical device of claim 1, wherein the shaft comprises at least two sleeves.

6. The medical device of claim 1, where at least one of the plurality of slots comprises a key portion and a mating key receiving portion, where closing the space between each of the plurality of slots comprises closing the space between the slot to move the key portion and key receiving portion together to prevent torsional movement of the sleeve when articulating.

7. The medical device of claim 6, where each of the plurality of slots comprises the key portion and the mating key receiving portion, where progressively articulating the working end causes each key portion and key receiving portion to move together to prevent torsional movement of the sleeve.

8. The medical device of claim 1, wherein the shaft comprises at least a first sleeve having the series of slots.

9. The medical device of claim 8, where each of the series of slots on the first sleeve has an arcuate shape.

10. The medical device of claim 8, where at least one of the series of slots on the first sleeve has a radial shape.

11. The medical device of claim 1, where the shaft further comprises a second sleeve having a second series of slots where at least one of the second series of slots has an arcuate shape.

12. The medical device of claim 11, where at least one of the second series of slots comprises a key portion and a mating key receiving portion.

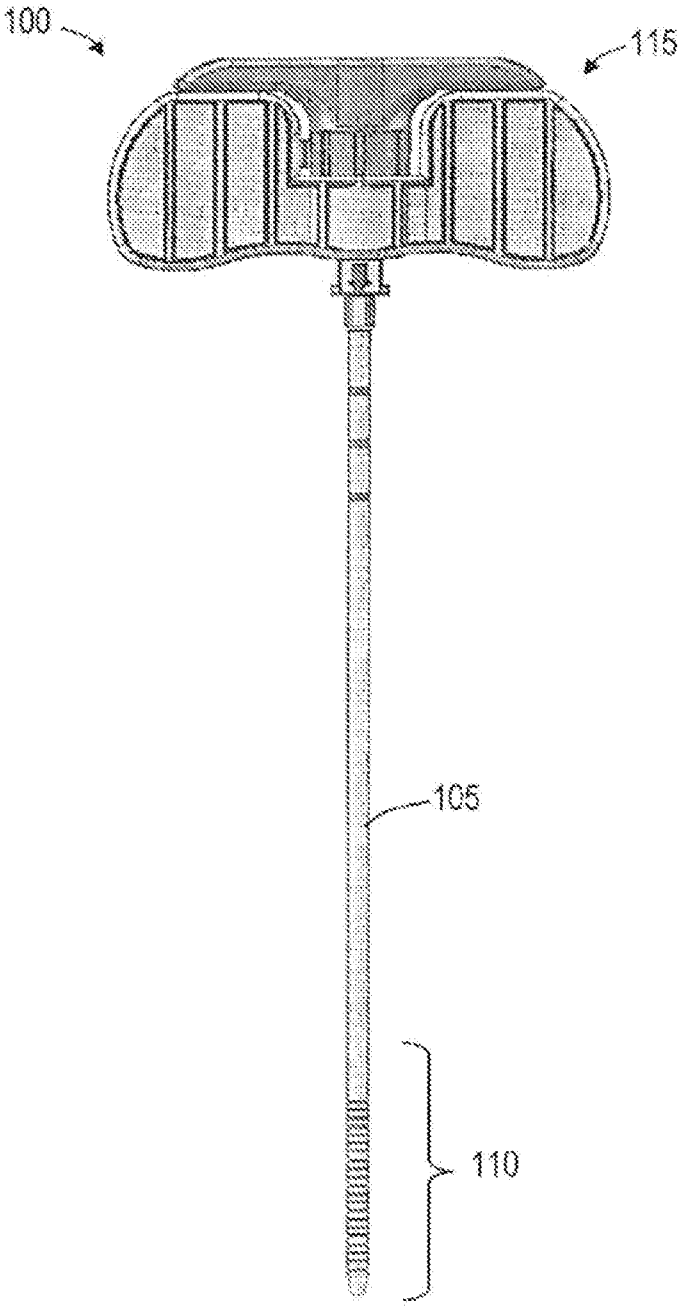

FIG. 1

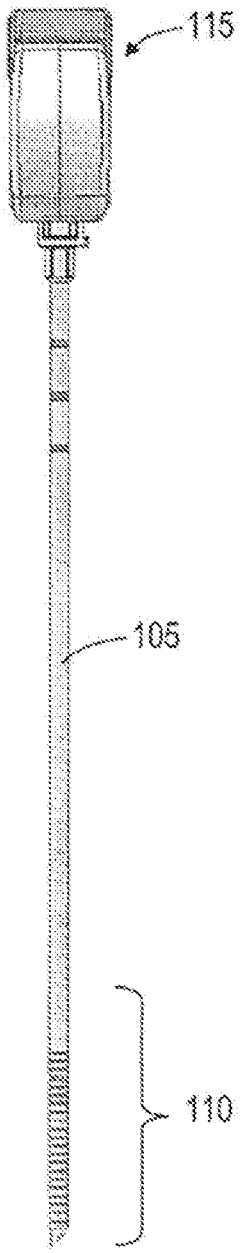

FIG. 2

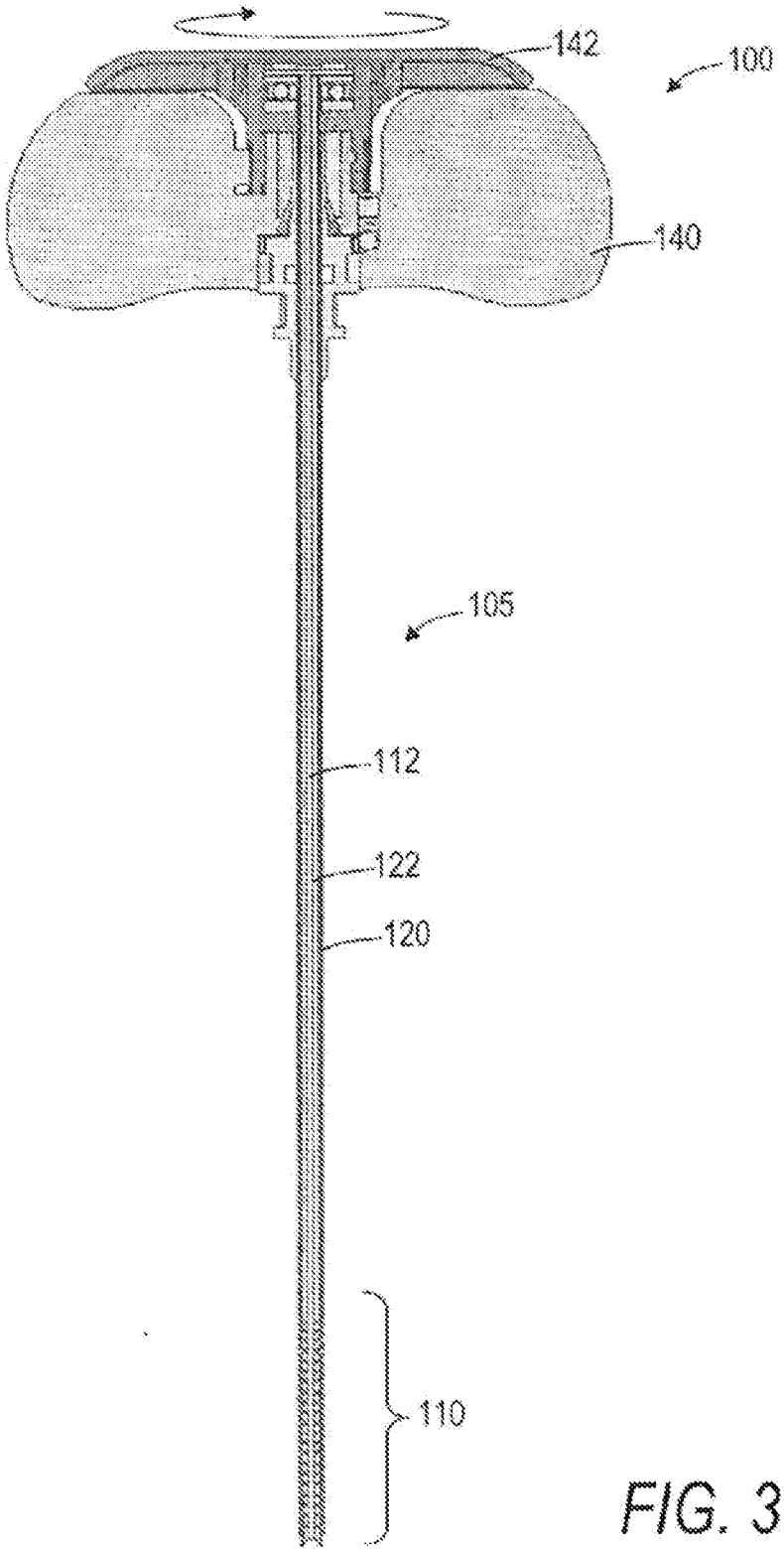

FIG. 3

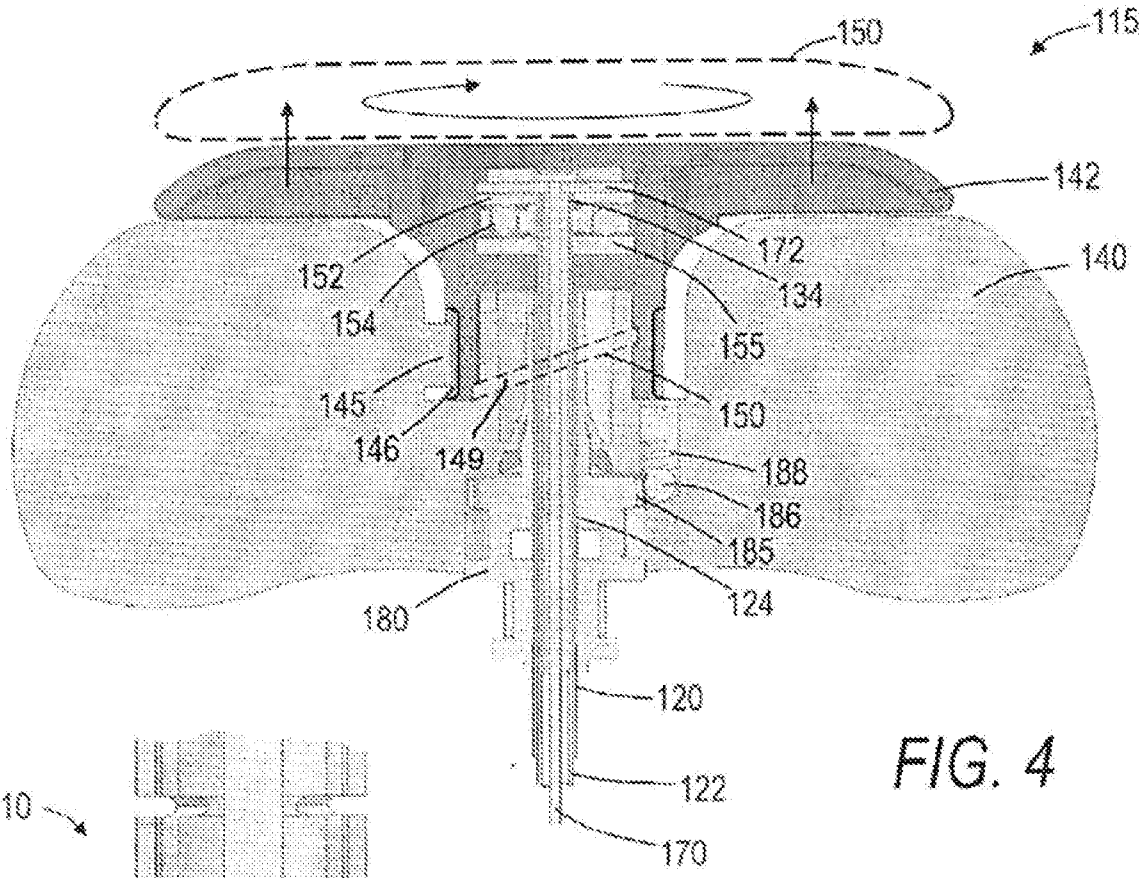
150
115
142
140
172
134
152
154
155
145
150
146
149
188
186
185
124
180
120
122
170

FIG. 4

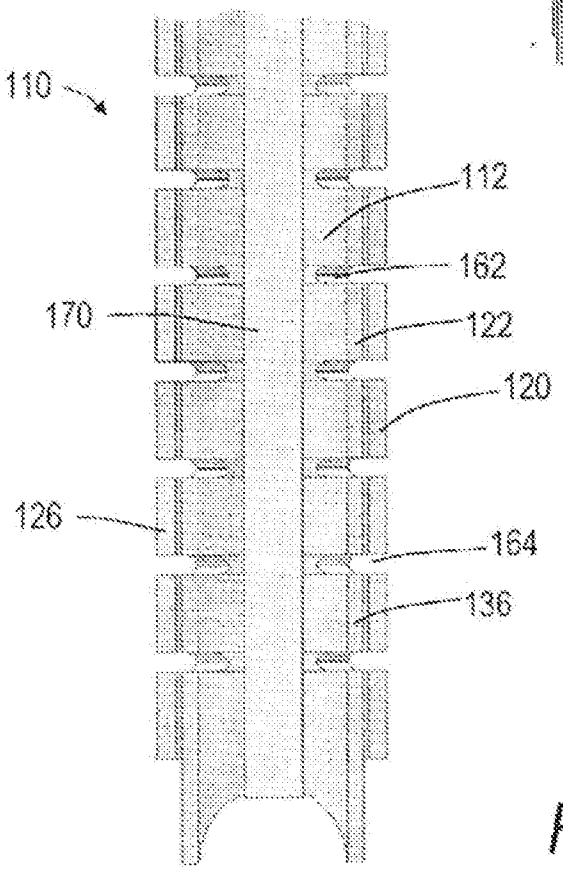
110
112
162
170
122
120
126
164
136

FIG. 5

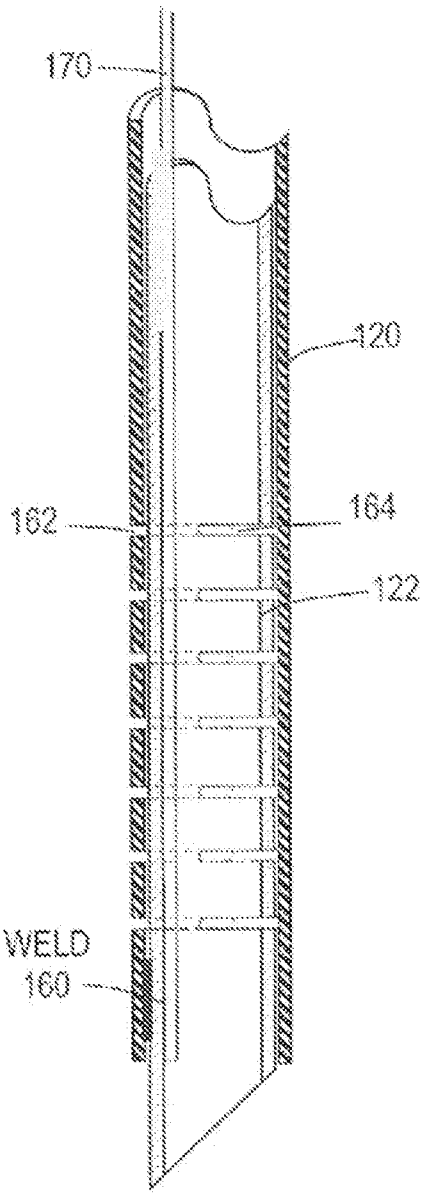

FIG. 6A

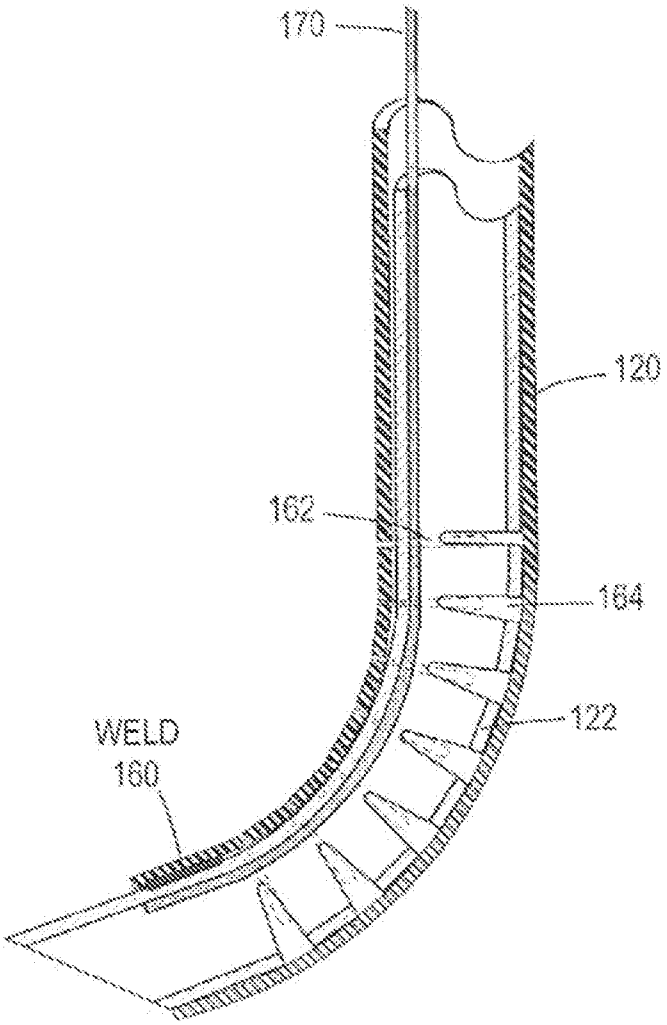

FIG. 6B

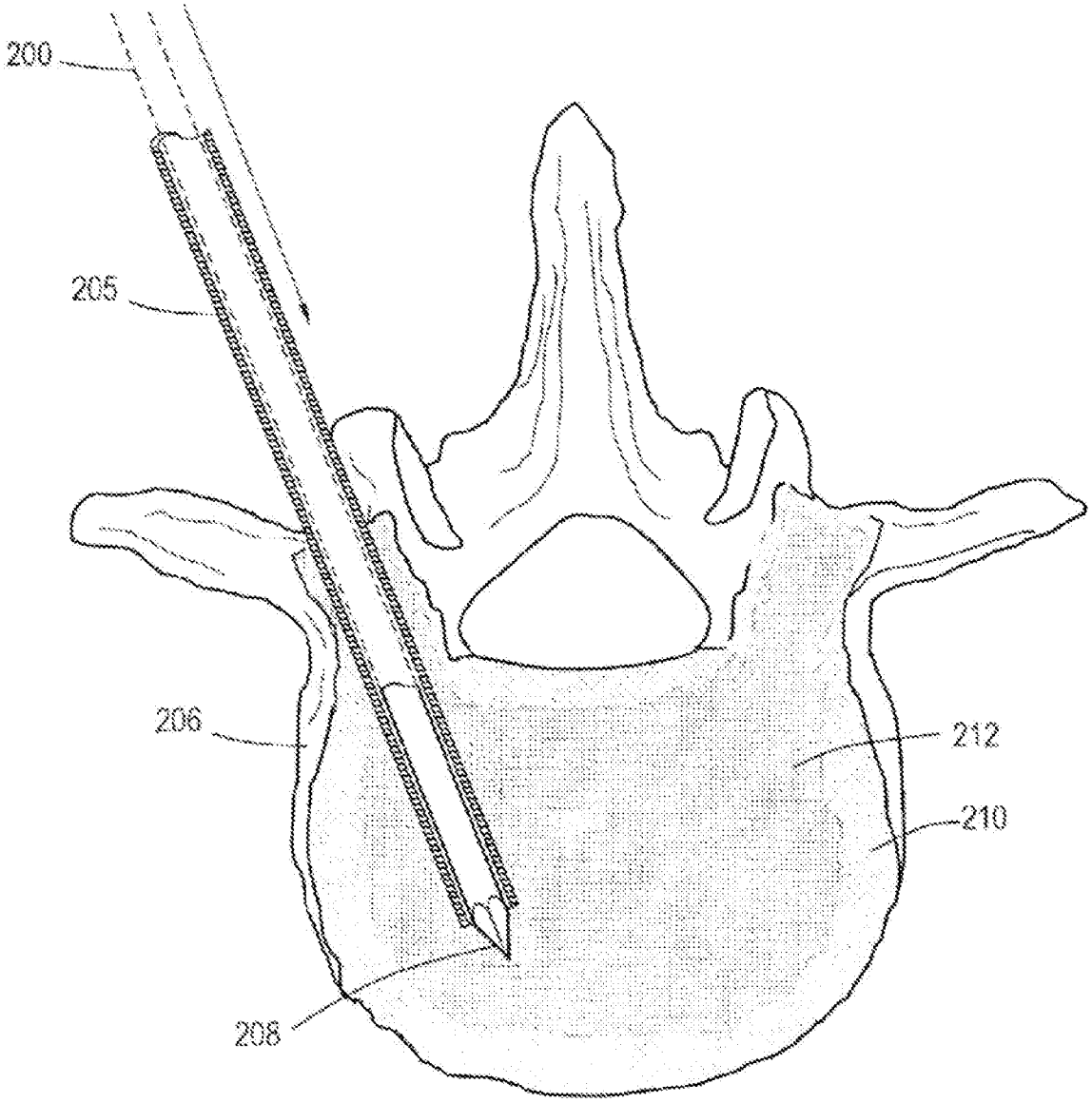

FIG. 7A

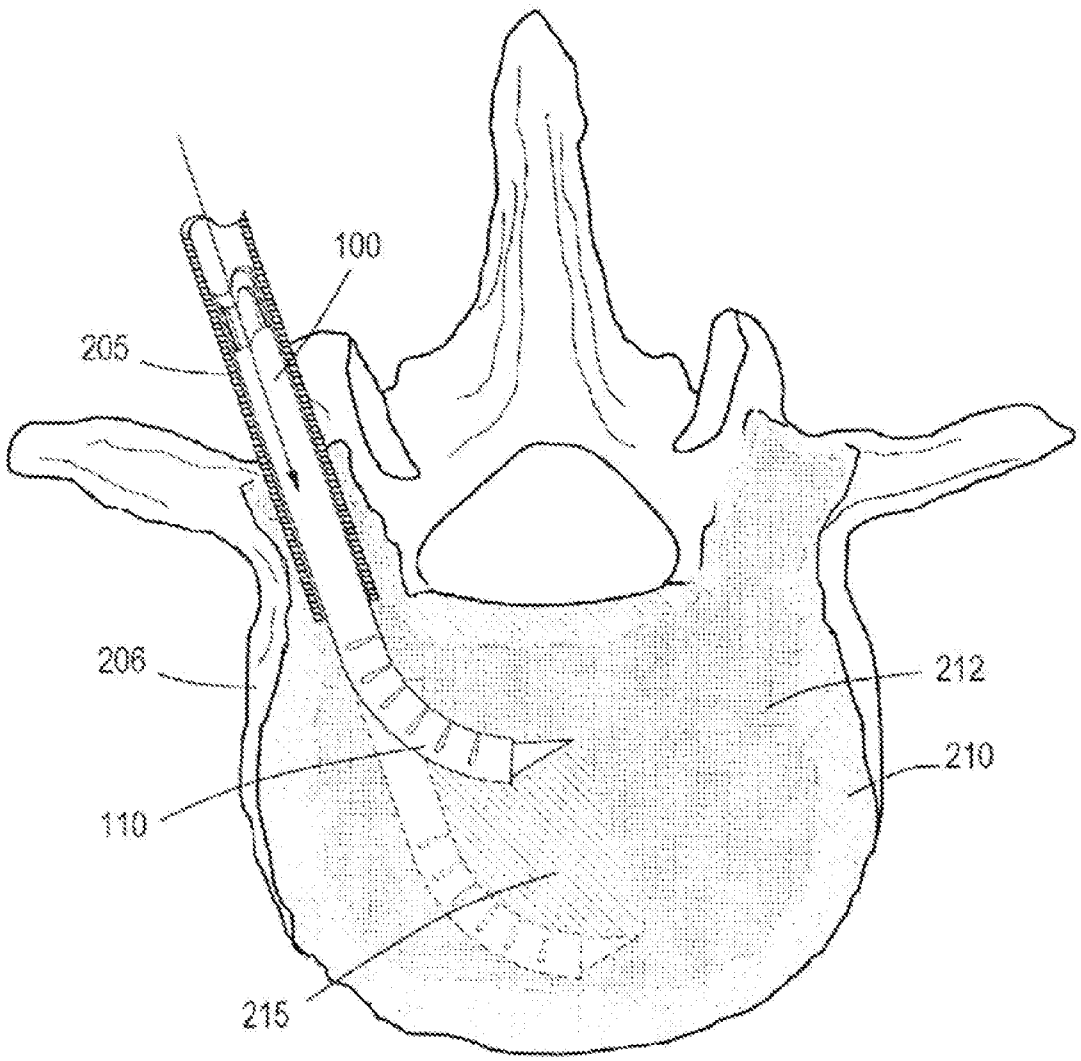

FIG. 7B

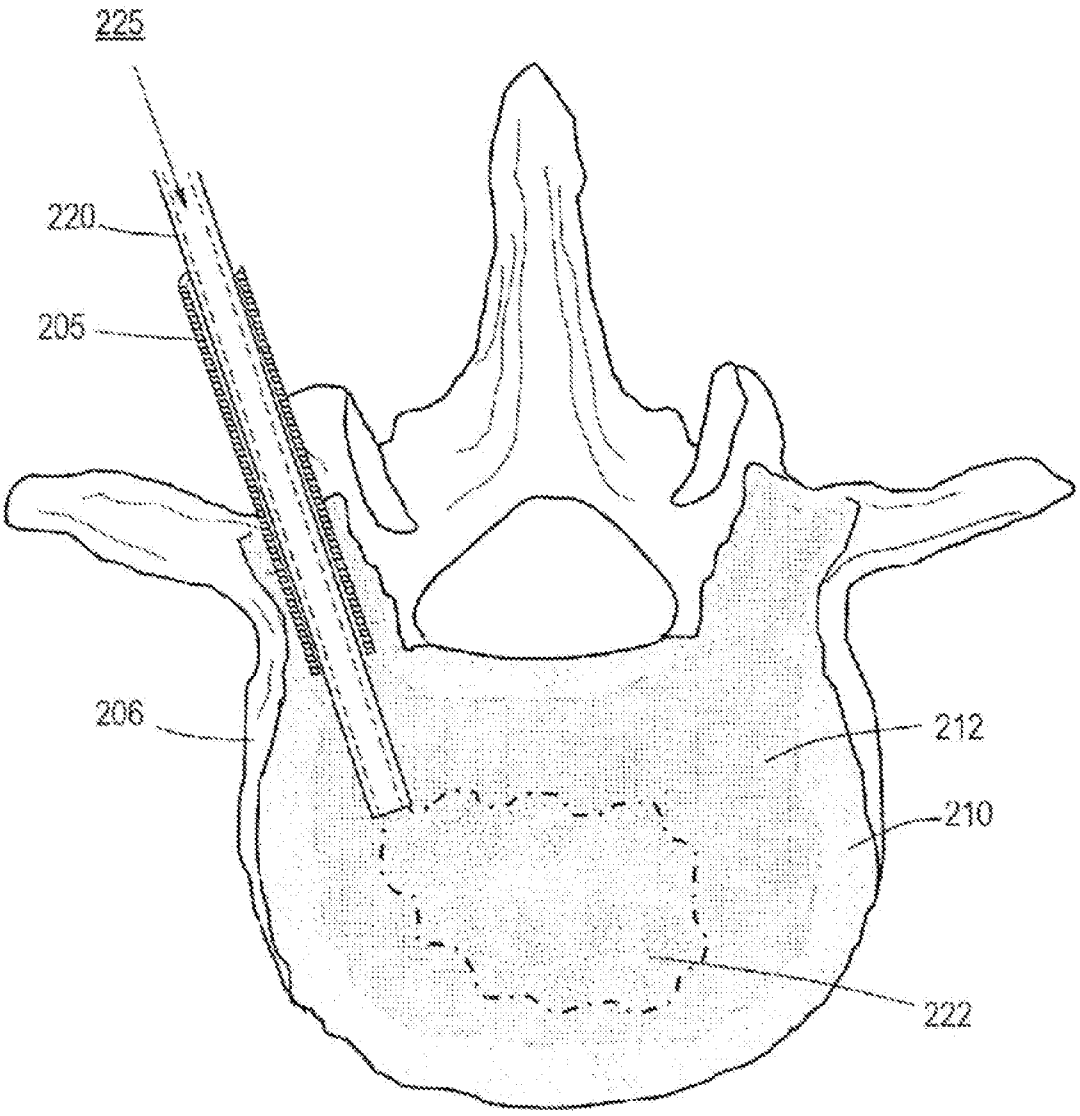

FIG. 7C

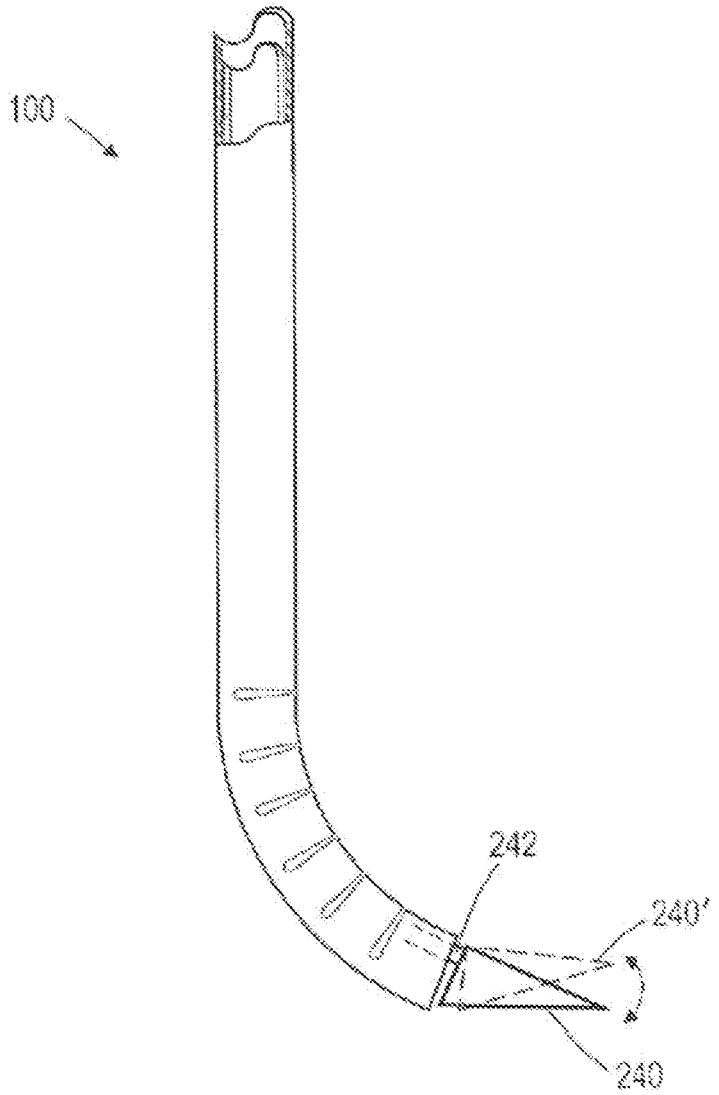

FIG. 8

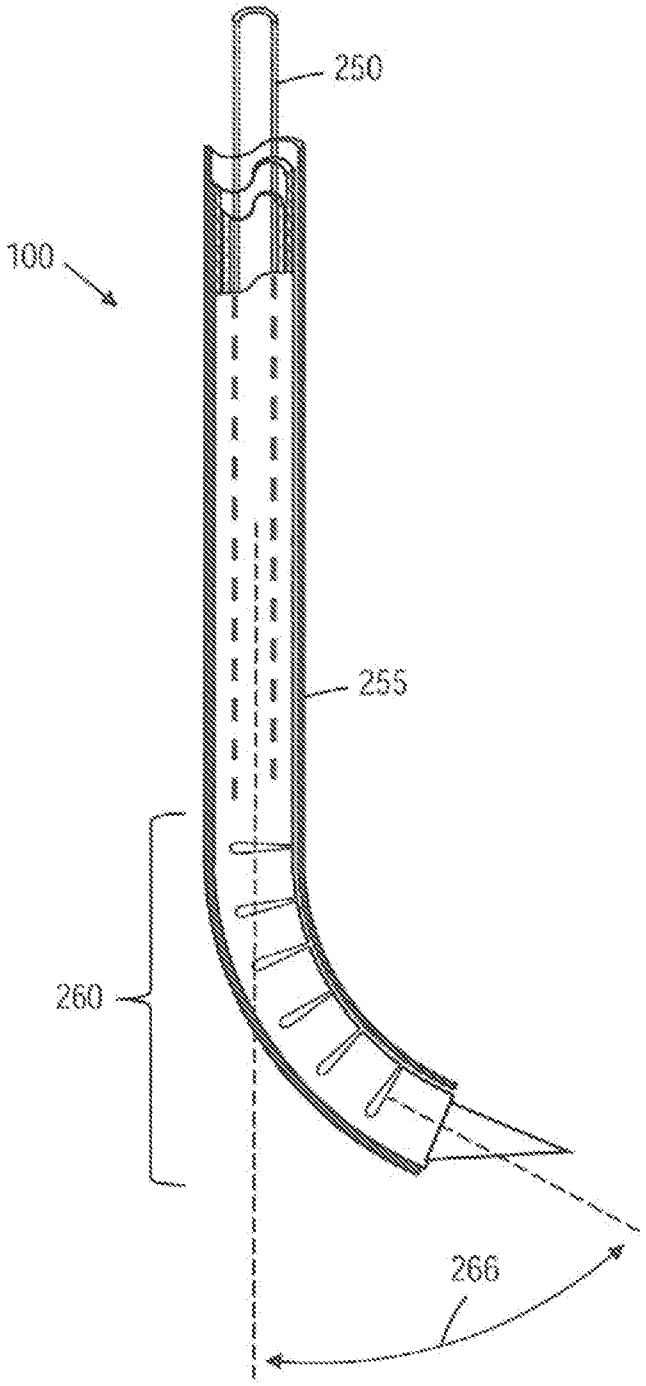

FIG. 9

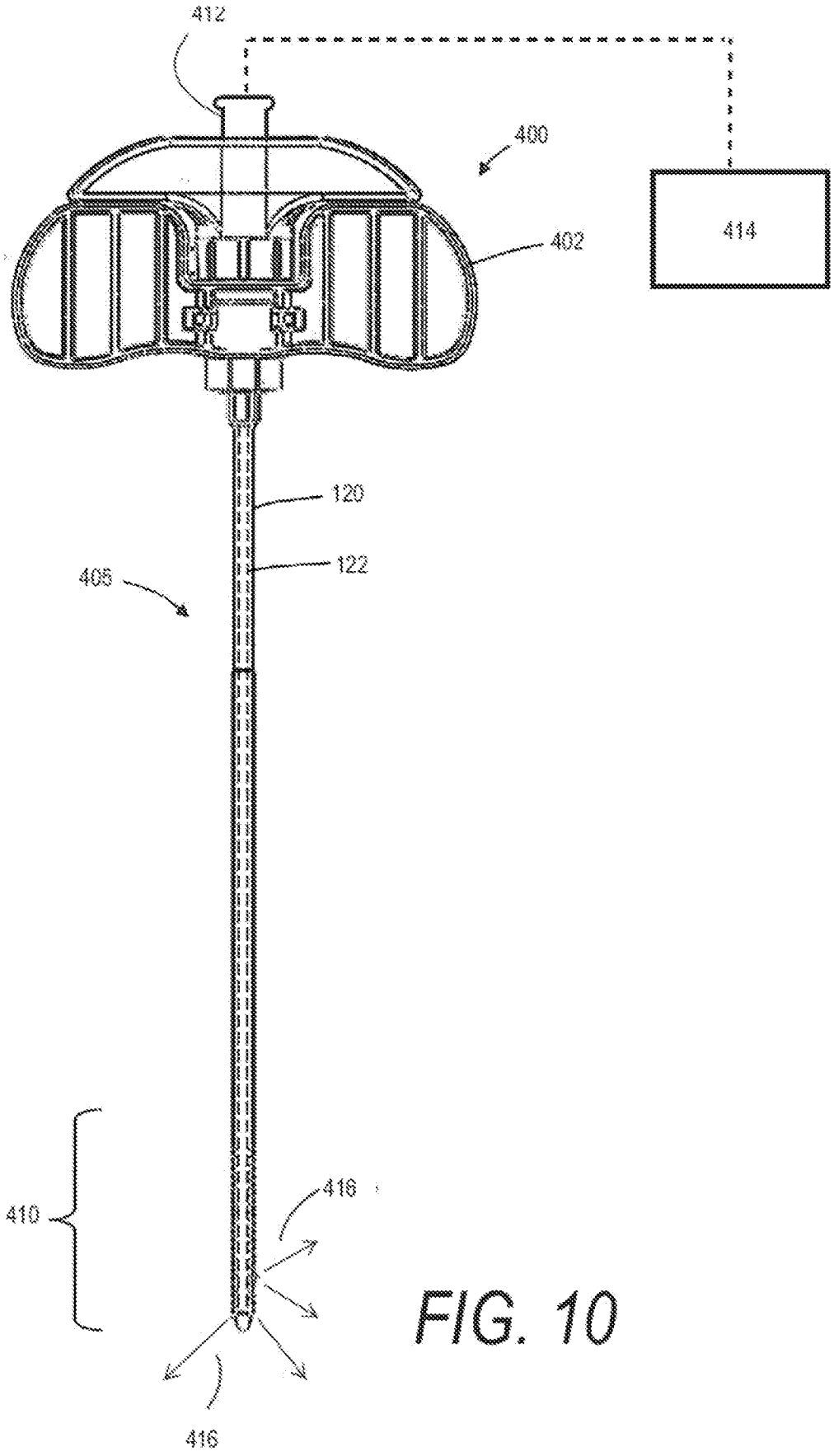

FIG. 10

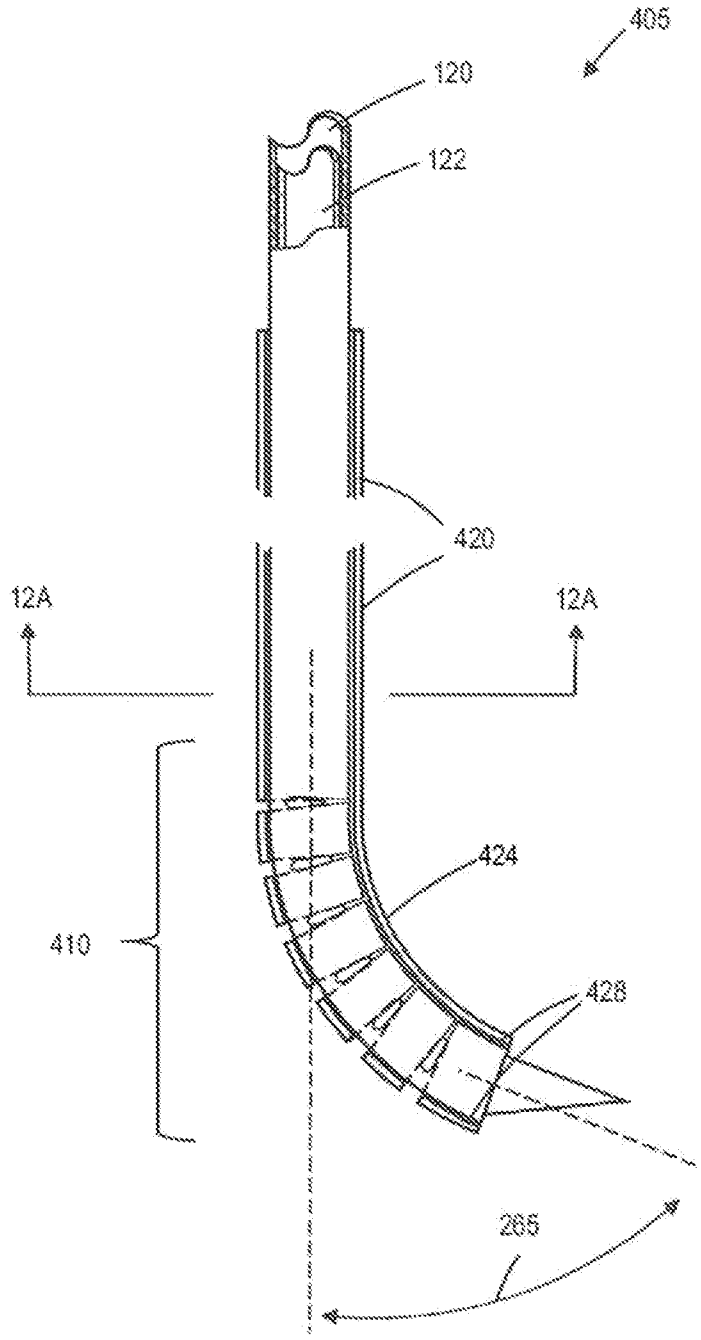

FIG. 11

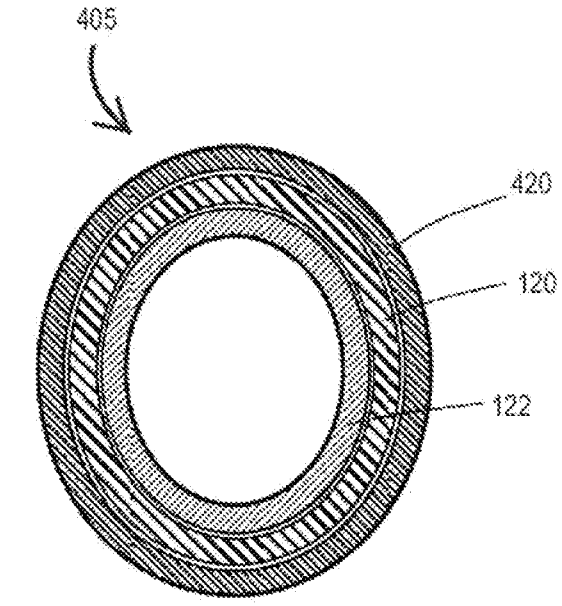

FIG. 12A

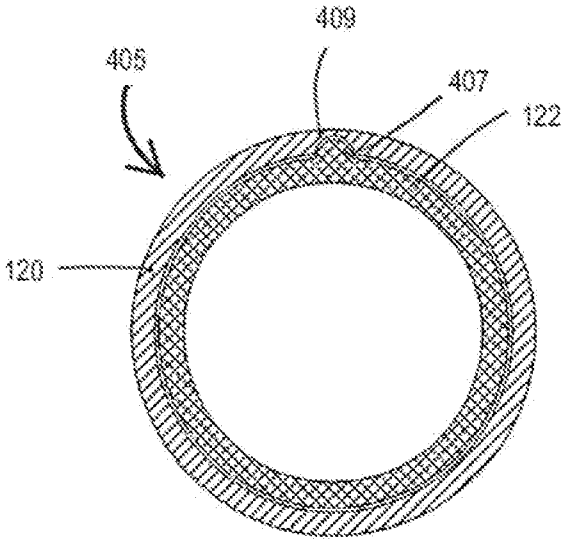

FIG. 12C

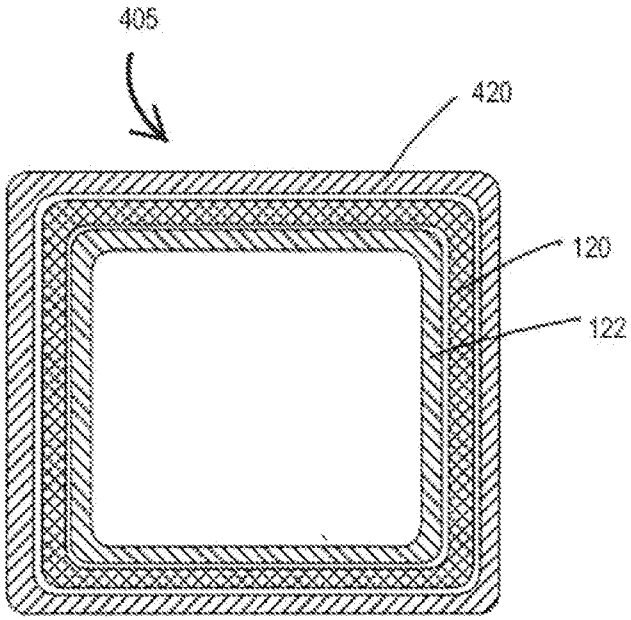

FIG. 12B

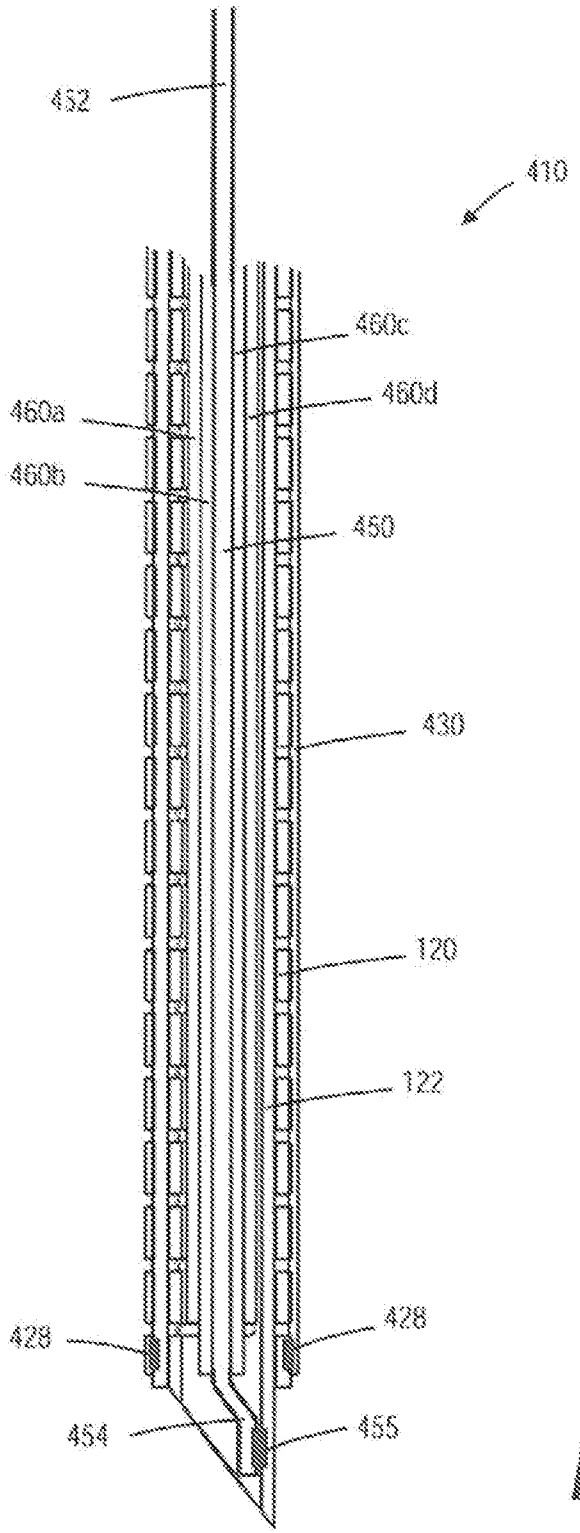

FIG. 13

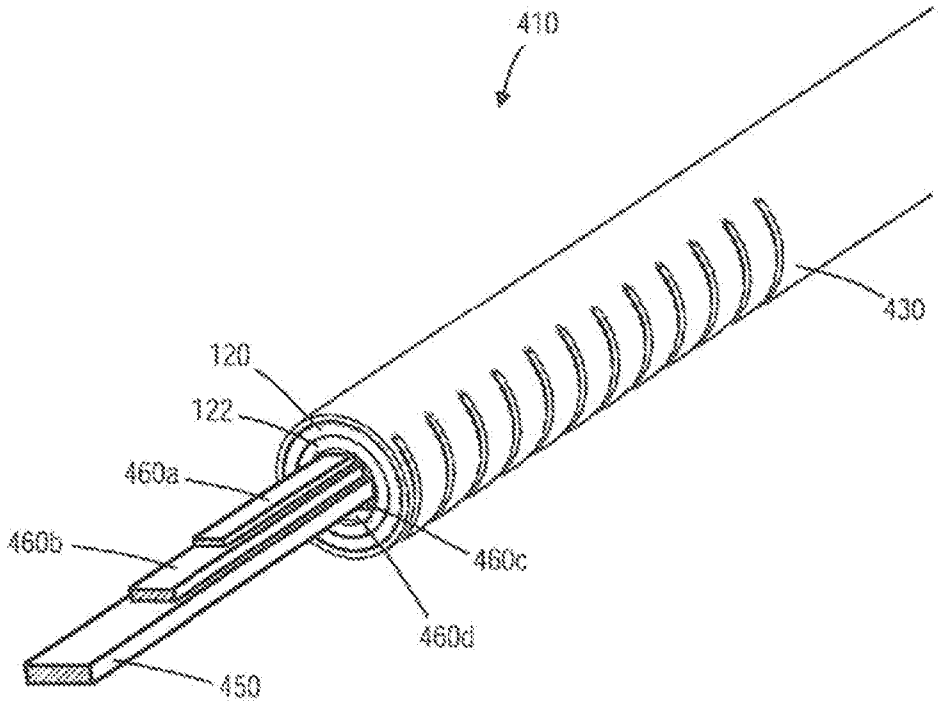

FIG. 14

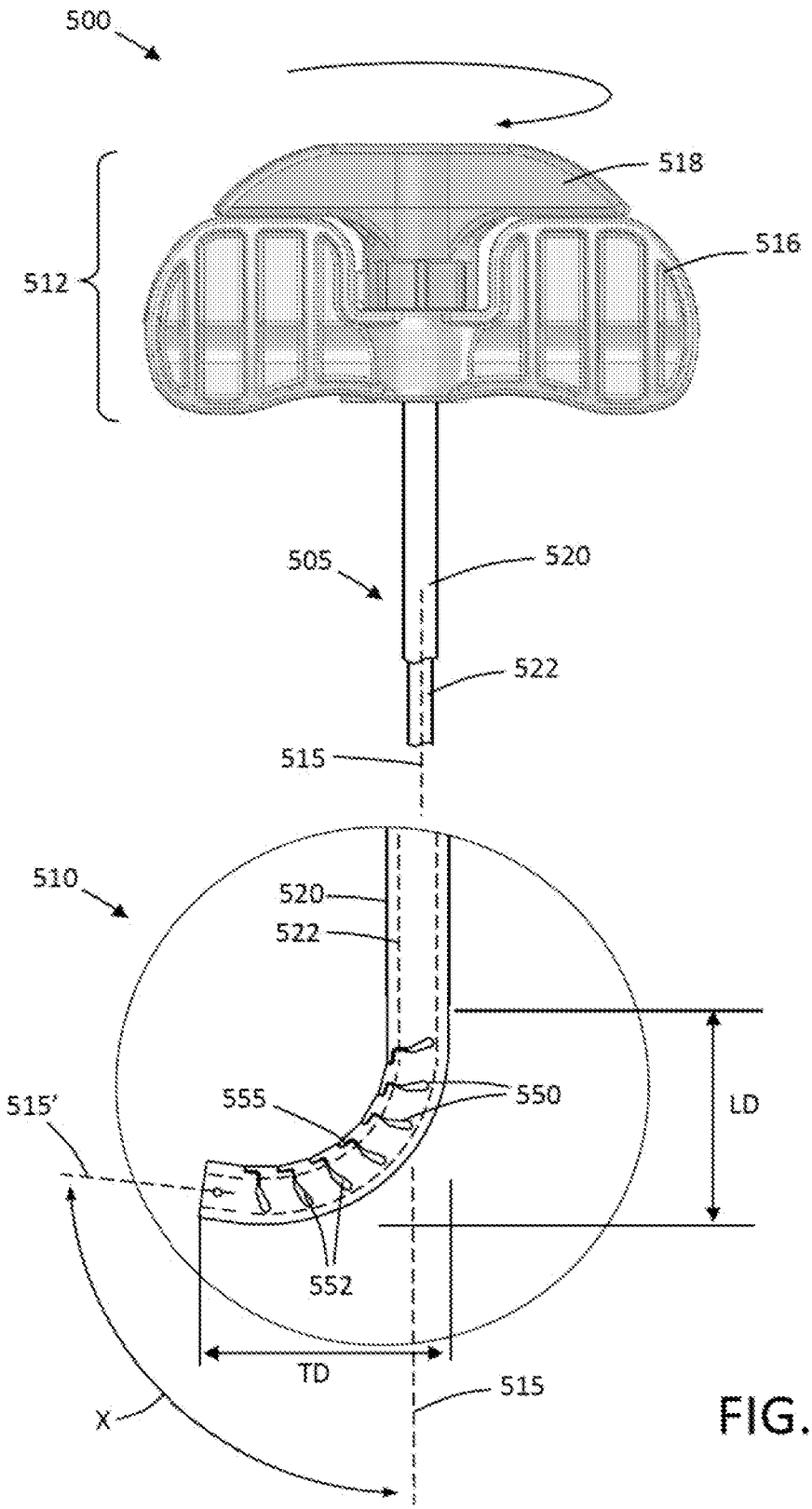
500
518
516
512
505
520
522
515
510
520
522
LD
515'
555
550
552
TD
515
X

FIG. 15

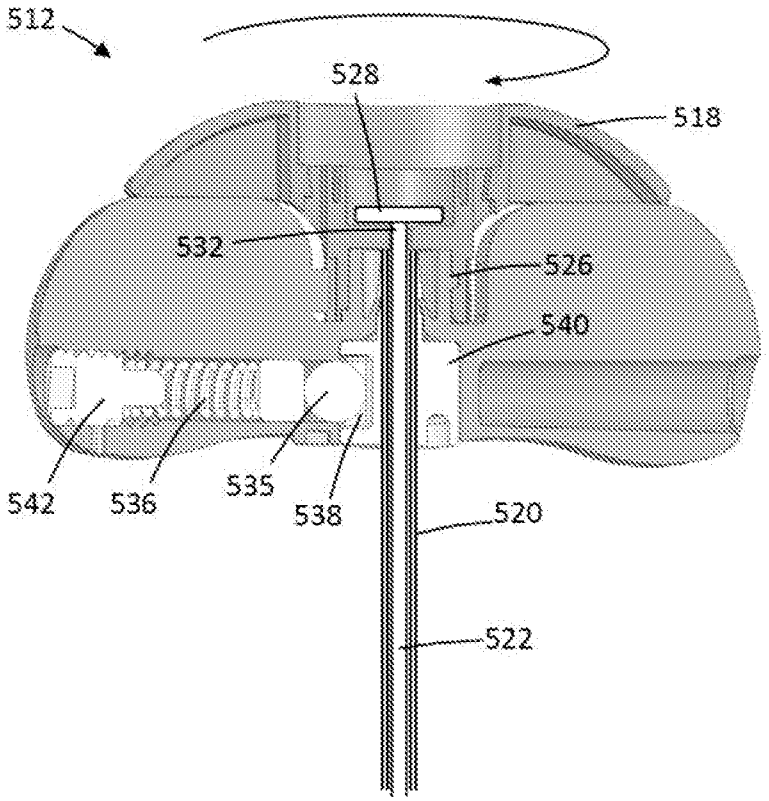

FIG. 16

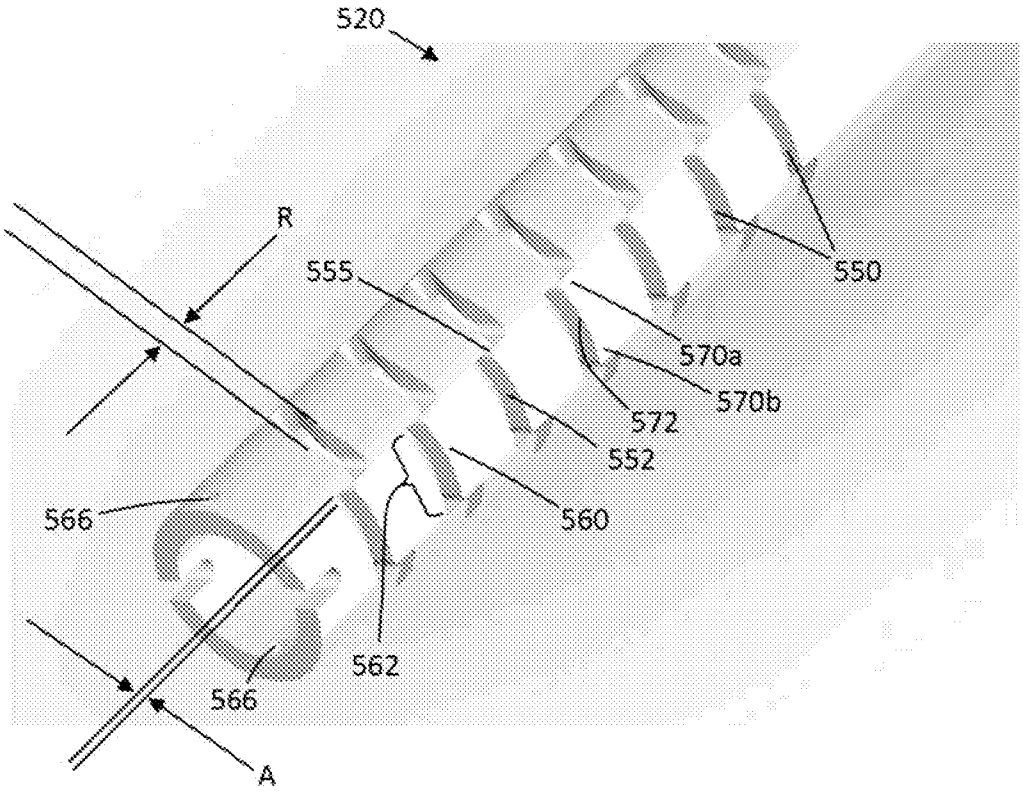

FIG. 17

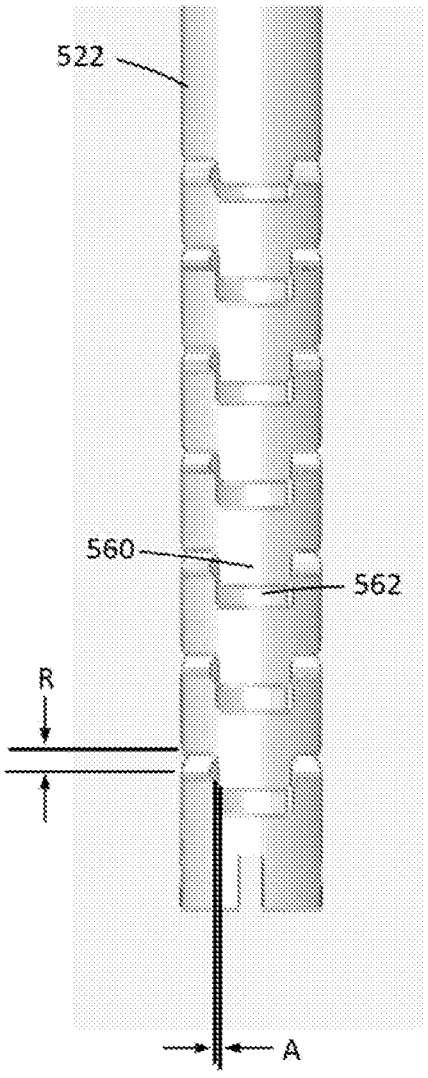

FIG. 18A

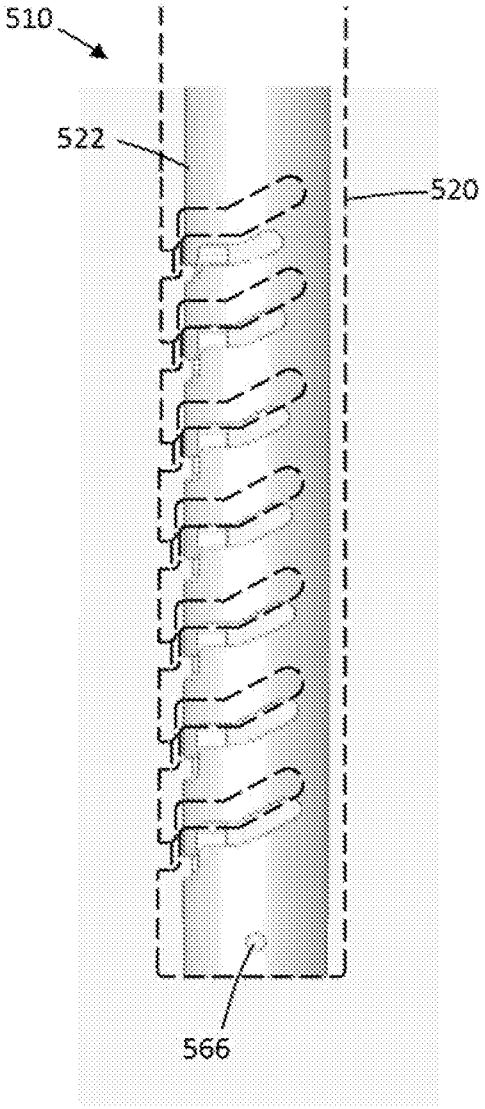

FIG. 18B

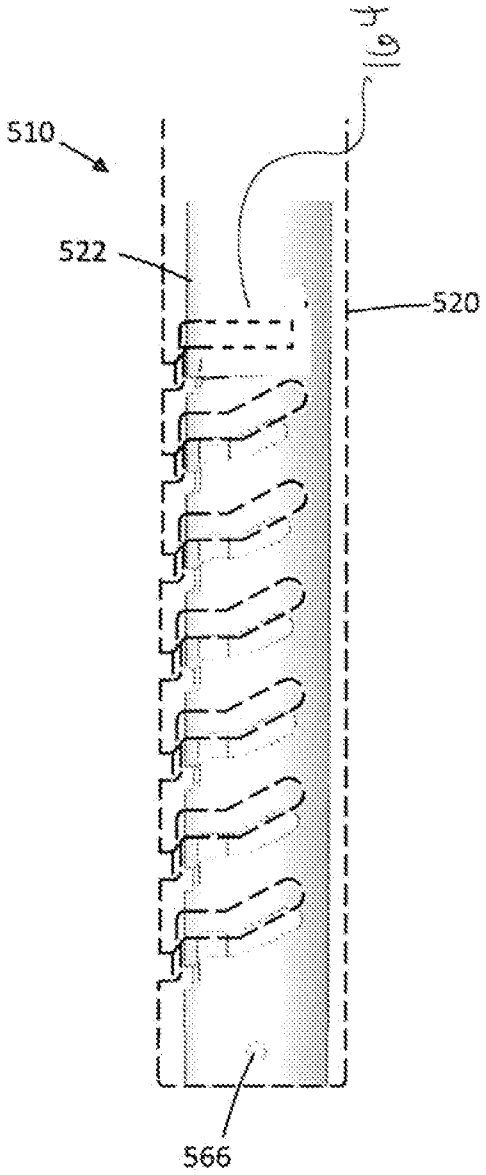

FIG. 18C

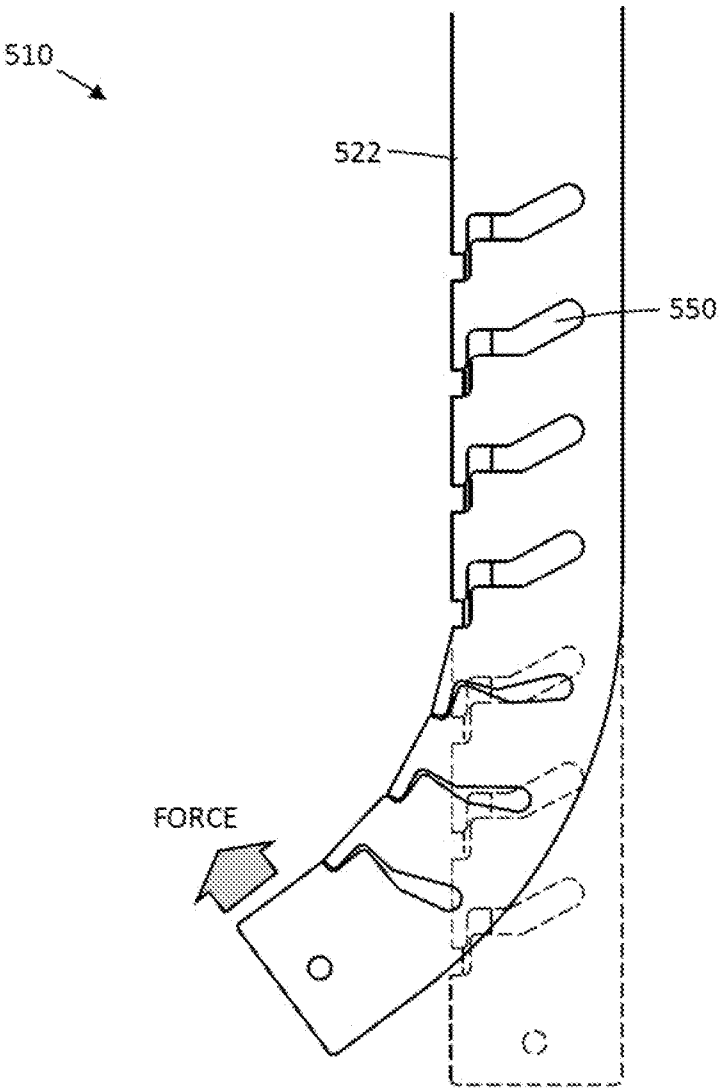

FIG. 19A

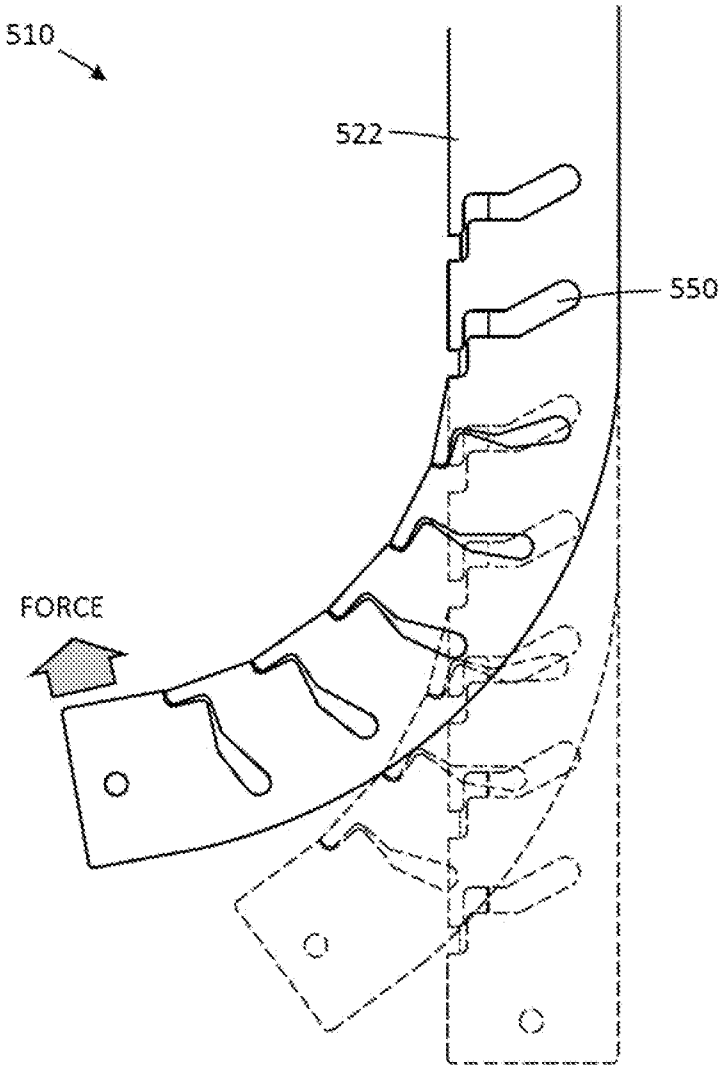

FIG. 19B

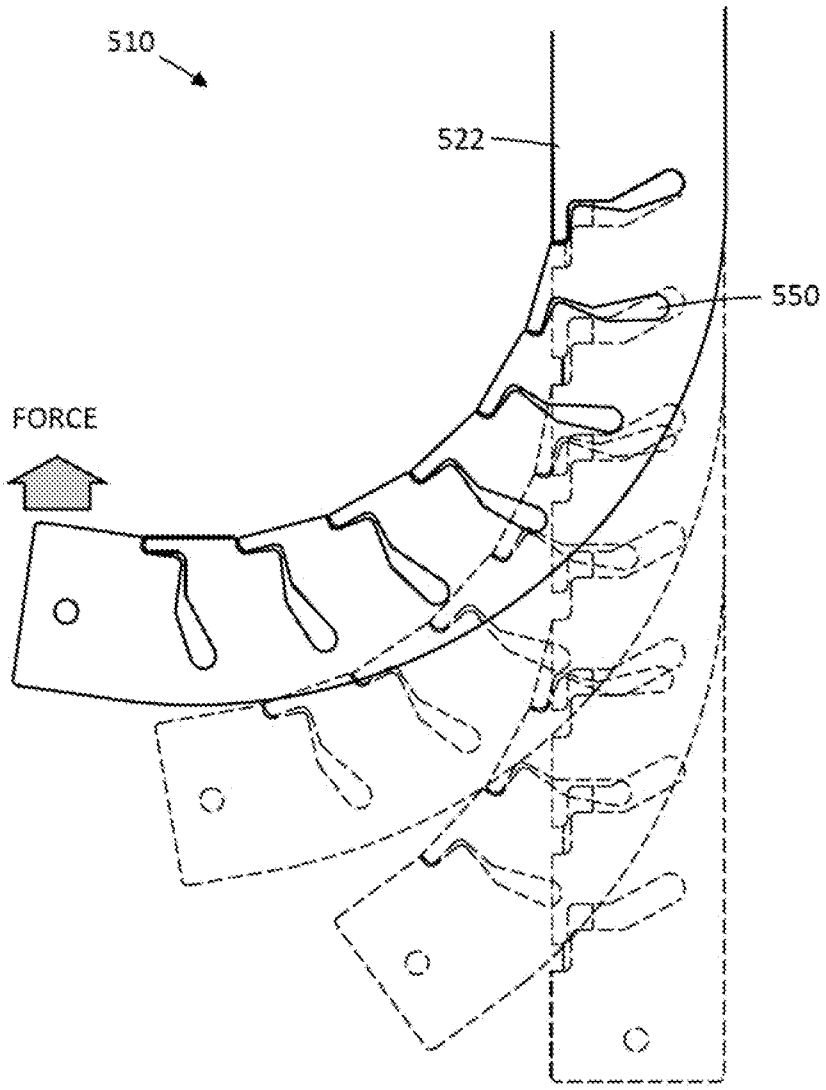

FIG. 19C

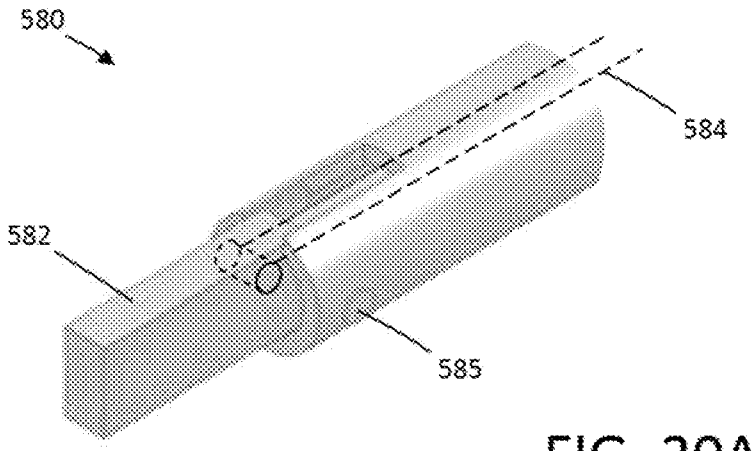

FIG. 20A
(PRIOR ART)

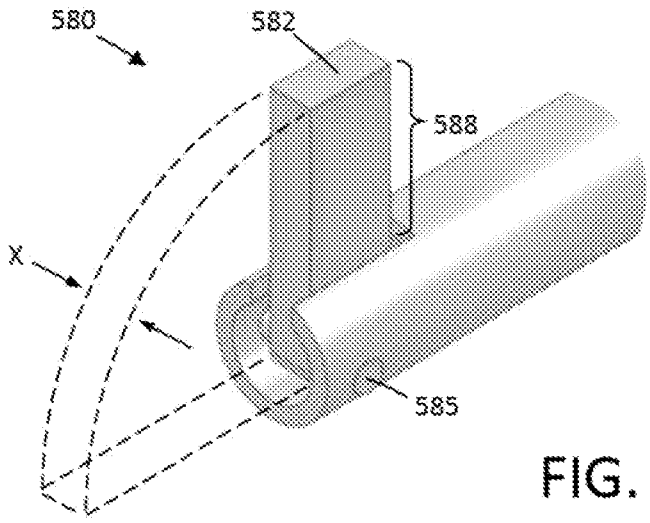

FIG. 20B
(PRIOR ART)

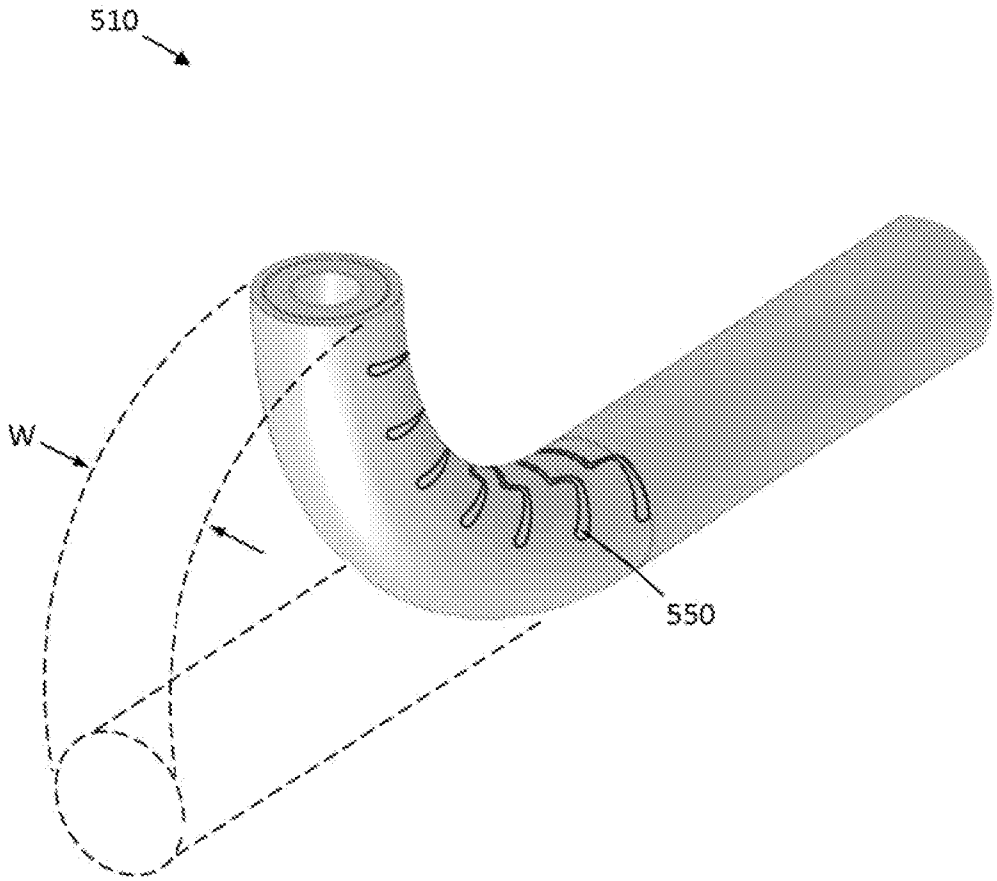

FIG. 21

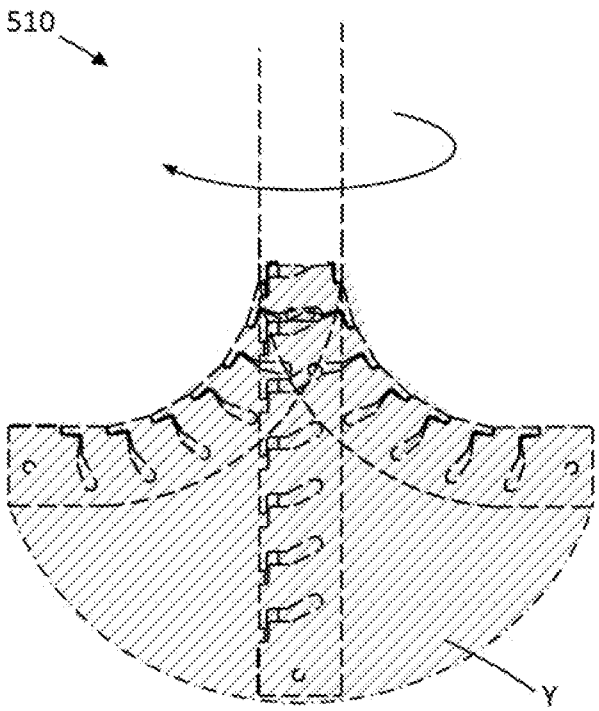

FIG. 22

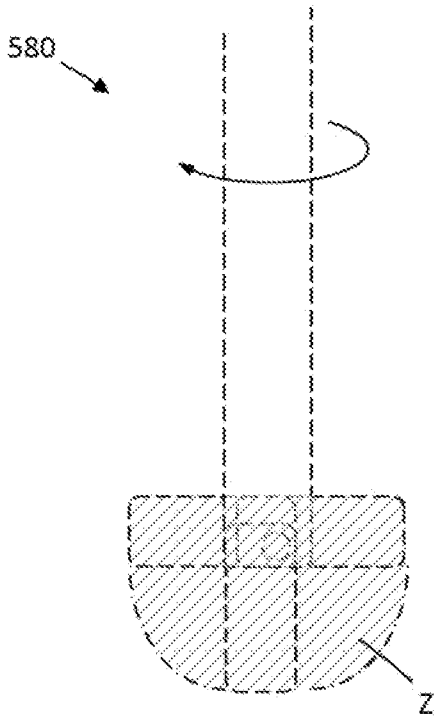

FIG. 23
(PRIOR ART)

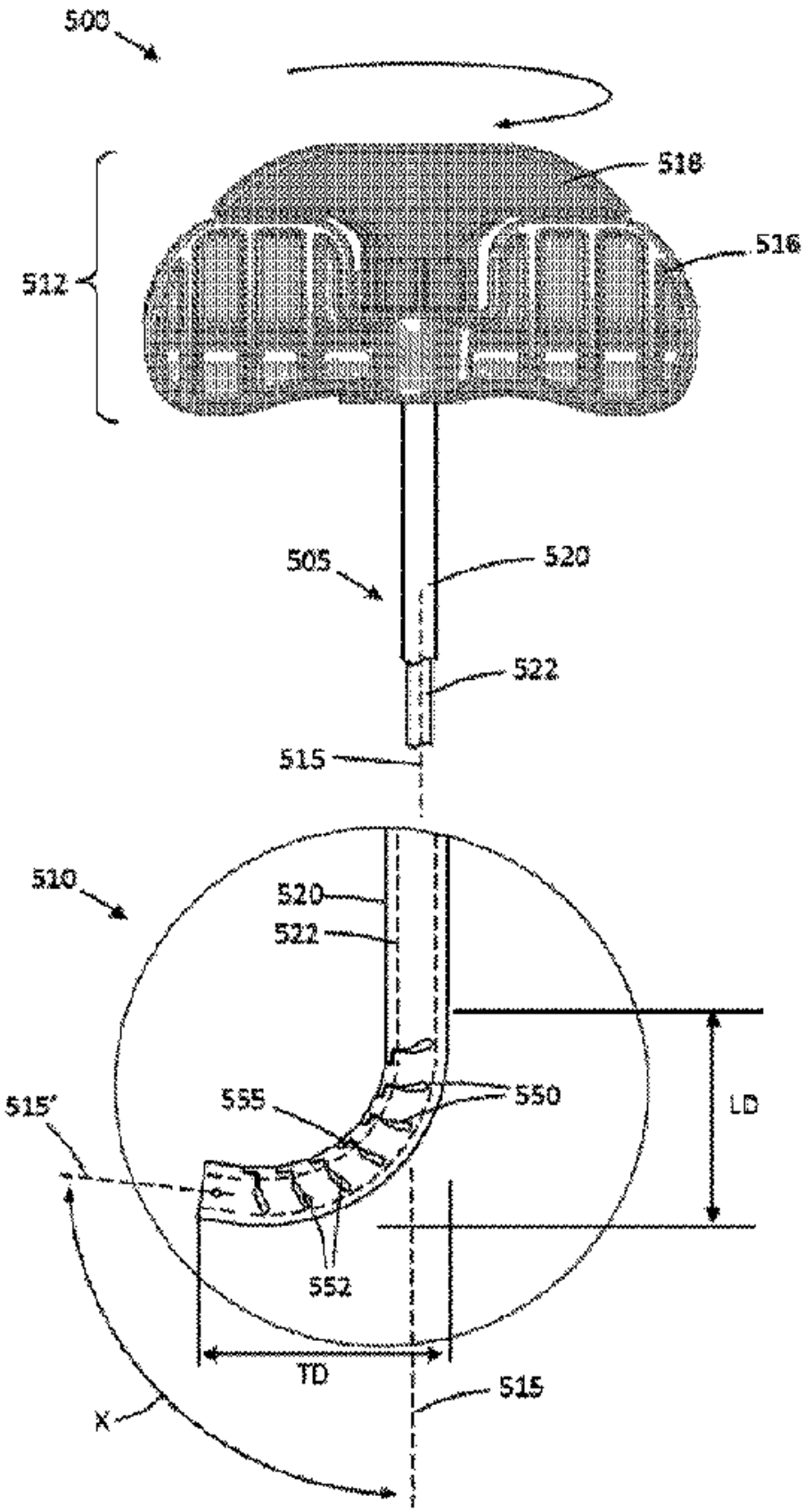
500
518
516
512
505
520
522
515
510
520
522
515'
555
550
LD
552
TD
515
X