(No Model.) 2 Sheets—Sheet 1.

C. SCHNEIDER & B. MASCHINO.

FIRE ESCAPE.

No. 456,003. Patented July 14, 1891.

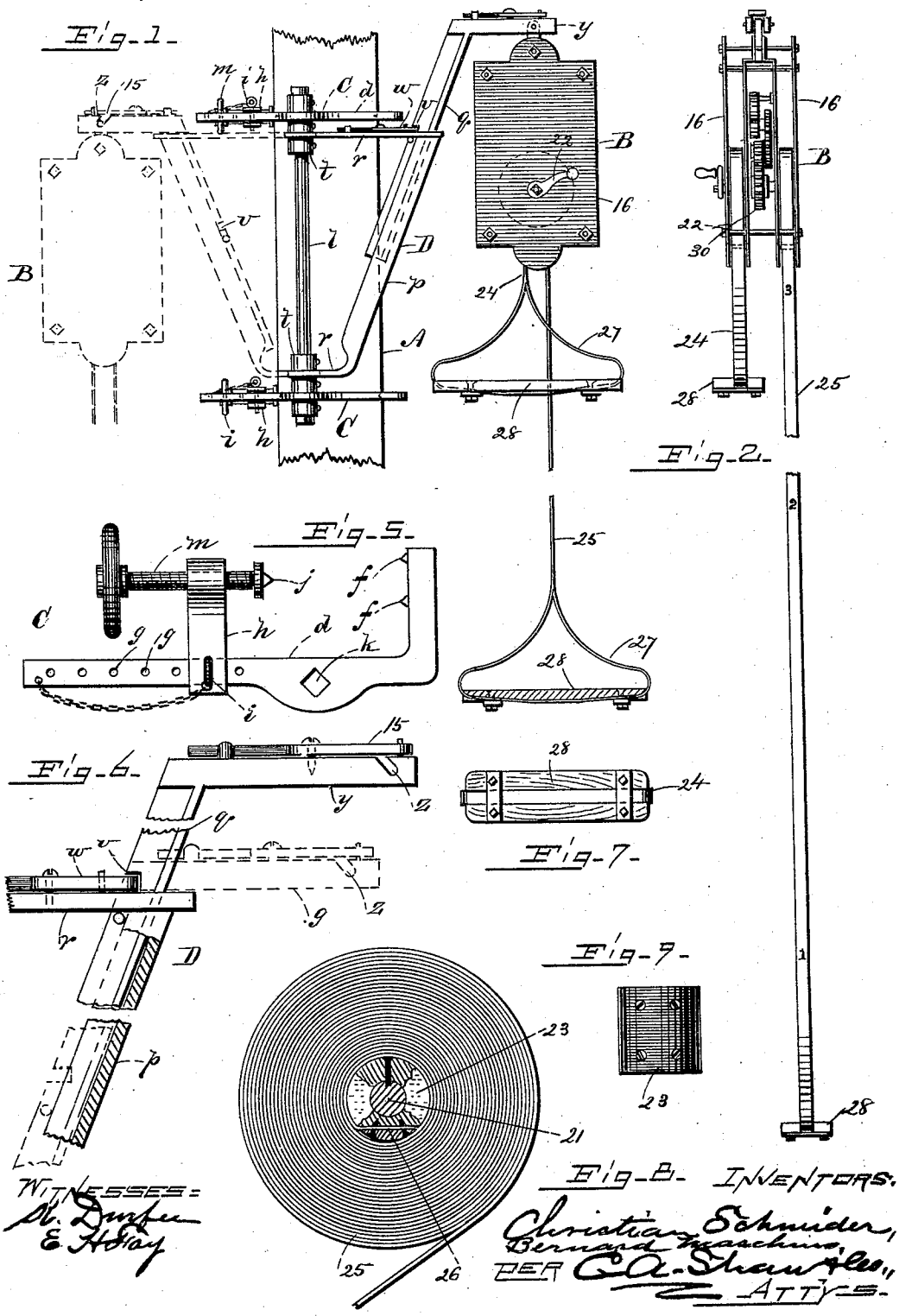

WITNESSES:
St. Dunfee
E. H. Fay

INVENTORS.
Christian Schneider,
Bernard Maschino,
PER C. A. Shaw & Co.,
ATTYS.

THE NORRIS PETERS CO., PHOTO-LITHO., WASHINGTON, D. C.

(No Model.) 2 Sheets—Sheet 2.

C. SCHNEIDER & B. MASCHINO.

FIRE ESCAPE.

No. 456,003. Patented July 14, 1891.

Fig. 3.

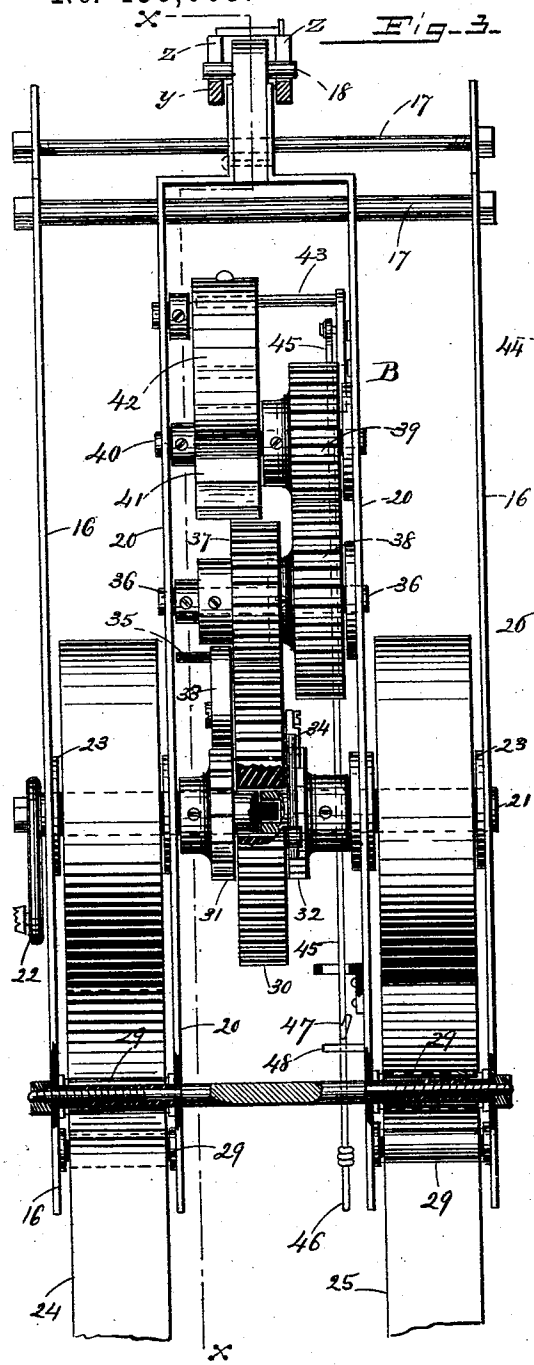

Fig. 4.

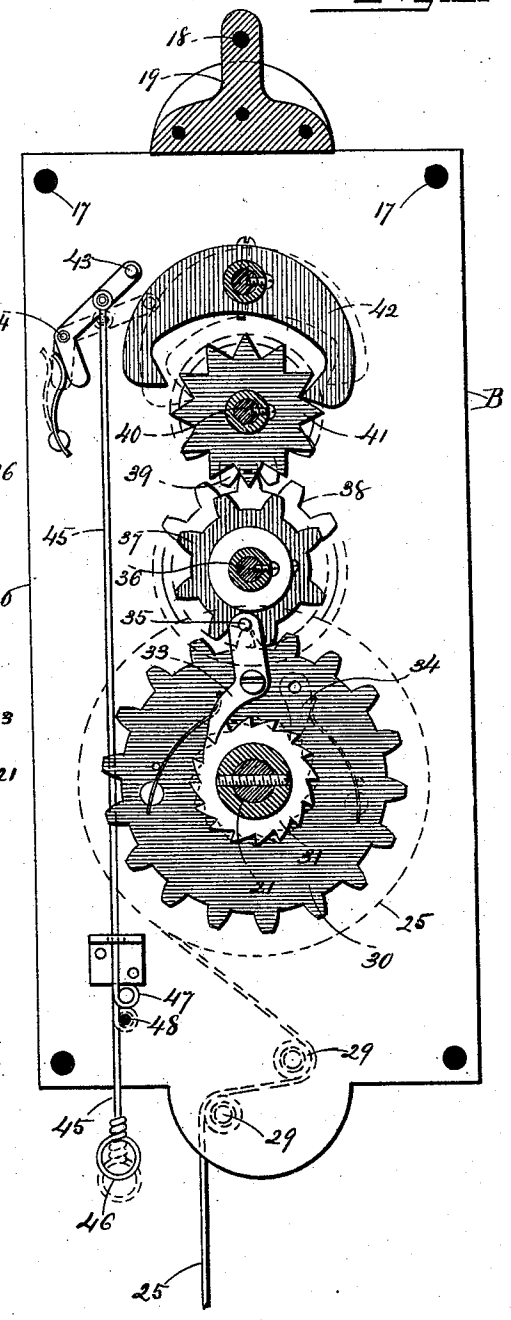

WITNESSES:
H. Durfee
E. H. Fay.

INVENTORS:
Christian Schneider,
Bernard Maschino
PER C. A. Shawles,
ATTYS.

THE NORRIS PETERS CO., PHOTO-LITHO., WASHINGTON, D. C.

UNITED STATES PATENT OFFICE.

CHRISTIAN SCHNEIDER AND BERNARD MASCHINO, OF BOSTON, MASSACHUSETTS.

FIRE-ESCAPE.

SPECIFICATION forming part of Letters Patent No. 456,003, dated July 14, 1891.

Application filed January 19, 1891. Serial No. 378,378. (No model.)

To all whom it may concern:

Be it known that we, CHRISTIAN SCHNEIDER and BERNARD MASCHINO, both of Boston, in the county of Suffolk, State of Massachusetts, have invented certain new and useful Improvements in Fire-Escapes, of which the following is a description, sufficiently full, clear, and exact to enable any person skilled in the art or science to which said invention appertains to make and use the same, reference being had to the accompanying drawings, forming part of this specification, in which—

Figure 1 is a sectional elevation representing a portion of a widow-casing with our improved apparatus in position for use; Fig. 2, an edge elevation of the apparatus; Fig. 3, an edge elevation, enlarged, of the lowering mechanism; Fig. 4, a vertical section taken on line *x x* in Fig. 3; Fig. 5, a view of one of the window-clamps; Fig. 6, a sectional elevation of the crane; Fig. 7, an under side plan of the seat, and Figs. 8 and 9 views showing details of the belt-reel.

Like letters and figures of reference indicate corresponding parts in the different figures of the drawings.

Our invention relates to an adjustable fire-escape attachable to the window-casings of buildings; and it consists in certain novel features hereinafter fully set forth and claimed, the object being to produce a simpler, cheaper, and more effective device of this character than is now in ordinary use.

The nature and operation of the improvement will be readily understood by all conversant with such matters from the following explanation.

In the drawings, A represents the window-casing, and B the lowering mechanism, considered as a whole.

A clamp C, whereby the device is attached to the casing, comprises an angle-rod *d*, provided on its short arm with brads *f*, (see Fig. 5,) and in its long arm with a series of pin-openings *g*. An adjustable arm *h* is forked to astride the long arm of said angle-rod, upon which it slides and which is held in position by a pin *i*, passing through its forked end and the pin-holes *g*. In the free end of said arm a hand-screw *m* is mounted, provided with a brad *j* for engaging the casing. A square opening *k* is formed in the angle-rod. Two of said clamps are employed, connected by a vertical rod *l*, which is mounted in their openings *k*. The supporting-clamps are disposed against the side bars of the window-casing, with the short arms of the angle-bars engaging the outer face of said casing, the hand-screws *m* being turned into contact with the inner face thereof, whereby the device is supported in position.

An adjustable crane D is fitted to swing on the rod *l*, said crane being formed in two sections *p q*, the section *p* being grooved and the section *q* tongued to slide vertically in said groove. The section *p* has two arms *r*, respectively connected with sleeves *t*, rotatable on the rod *l*. The section *q* is notched at *v* to receive a spring-catch *w* on the upper arm *r*, whereby said section is supported when withdrawn from its companion section *p*. A horizontal head *y* on the upper end of the section *q* has a notch *z*, adapted to receive a pin 18 (see Fig. 3) on the lowering device B, said notch being closed by a spring-pushed catch 15.

The crane is adapted to be swung so that it will project from the window, as shown in Fig. 1, and when not in use the section *q* thereof may be housed in the section *p* and the device swung inward, as shown by dotted lines in said figure.

The lowering device B comprises a frame consisting of two face-plates 16, connected by bolts 17, and having a lug 19 at their outer ends in which the pin 18, for suspending said device from the crane, is mounted. Between the plates 16 and connected with said lug two parallel frame-plates 20 are disposed, between which a train of retarding-gears is mounted. A sectional shaft 21 is journaled in the frame, one of its sections being provided with a crank 22. Each section on the shaft 21, which is independently rotatable in the frame, bears a pulley 23, upon which belts 24 and 25 are respectively reeled, one end of said belt being passed through a slot in said pulley and secured by screws, as shown at 26 in Fig. 8. The lower end of each belt is looped at 27, and a seat 28 is secured in said loop. (Best

shown in Fig. 1.) The belts pass in opposite directions on their respective pulleys and around friction-rolls 29, journaled in the lower end of the frame. A large gear 30 is mounted loosely on the shaft 21 at its section-joint, and at opposite sides of said gear ratchets 31 and 32 are respectively secured to the shaft-sections. A spring-pushed pawl 33, pivoted to the adjacent face of the gear 30, engages the ratchet 31, and a similar spring-pushed pawl 34, pivoted to the opposite gear, engages the ratchet 32, the teeth of said ratchets being pitched in opposite directions. An arm or pin 35 projects laterally from the pawl 33. A shaft 36, journaled in the plates 20, bears a pinion 37, which meshes with the gear 30, and a gear 38, which meshes with a pinion 39 on a shaft 40, journaled in said plates. A scape-wheel 41 is mounted on the shaft 40, and is engaged by a scape-lever 42, pivoted above said wheel. A spring-pushed lever 43 is pivoted at 44 to the plate 20, and a vertical sliding rod 45 is attached to one arm of said lever in position to throw it into engagement with the scape-lever 42 and lock said lever against the scape-wheel 41. The rod 45 projects below the plate 20 and is provided with a hand-loop 46 on its lower end and with a loop 47. It is adapted to receive a pin 48 on the plate 20 and lock the lever 43 against the scape-lever, preventing action of the train of gears.

In the use of our improvement the crane D is swung outward into the position shown in Fig. 2, and its member *q* elevated and locked by the catch *w*. The belts 24 and 25 are both wound on their respective pulleys, so that their seats 28 are adjacent to the lowering device B when projected from the window, as described. The pin 35 on the click 33 is now drawn outward by the operator releasing the ratchet-gear 31 therefrom and permitting its belt 24 to unreel from its pulley, its shaft-section turning independently on the companion shaft-section, which bears the belt 25. The rod 45 is now drawn downward and its loop 47 disposed over the pin 48, locking the scape-pawl 42 in its gear 41, as shown by dotted lines in Fig. 4. The operator disposes himself in the seat 28 on the belt 25 and releases the rod 45 from its pin 48, when his weight will cause the belt 25 to gradually unreel from its pulley 23, the train of gears described retarding the movement of said pulley and regulating the descent. The clicks 33 and 34 being fast to the main gear 30, said gear is rotated as the belt is unreeled and the shaft-sections being moved in the same direction. The belt 24 is reeled onto its pulley as the belt 25 unreels in a manner which will be readily understood without a more explicit description. The seat 28 on the belt 24 is now disposed in position to be used in like manner.

To house the device, when the belt 25 is reeled by releasing the ratchet 31 from the click 33 and rotating the corresponding shaft-section, by means of the crank 22, the belt 24 may be also reeled until the seats 28 are in position to be passed through the window. The crane-section *q* is released from the catch *w* and housed in the companion member *p*, said crane being then swung inward, as shown by dotted lines in Fig. 1.

It will be understood that the belts 24 and 25 may be constructed of canvas, rubber compound, or other suitable material, the seats 28 being arranged in any desired manner thereon. Instead of employing a sectional shaft 21, two independent shafts may be employed to reel the belts, if preferred.

Having thus explained our invention, what we claim is—

1. In a fire-escape, a crane attachable to the window-casing, in combination with a lowering mechanism comprising a sectional shaft, each section being provided with a pulley and belt, and said shaft-sections being connected to rotate conjointly in the same direction, and a train of retarding-gears for said shaft, substantially as described.

2. In a fire-escape, a crane or similar support attachable to a window-frame, in combination with a lowering device detachably secured to said support and comprising two pivoted reels, each provided with a belt or cord, a gear, pawls and ratchets connecting said reel-pivots, and a train of retarding-gears driven by said connecting-gear, substantially as described.

3. In a fire-escape, the clamp C, provided with the adjustable arm *h* and screw *m*, substantially as and for the purpose set forth.

4. In a fire-escape, the crane D, comprising adjustable members *p q*, and mechanism for pivoting said crane to a window-casing, in combination with a lowering device attachable to said crane, substantially as described.

5. In a fire-escape, the lowering device B, comprising the belts or cords 24 and 25, respectively reeled on companion members of a sectional shaft or two companion shafts, and mechanism for retarding the rotation of said shaft, substantially as described.

6. In a fire-escape, the sectional shaft 21, having independently-rotatable members, fixed ratchets on said members, a loose gear connecting with an escapement-train, and drive-pawls on said gear in engagement with said ratchets, substantially as described.

7. In a fire-escape, a lowering device comprising a frame, a sectional shaft, reels and belts on said shaft-sections, an escapement-train, a loose gear connecting said shaft and train, ratchets on the shaft-sections engaging pawls on said gear, and mechanism for locking said train, substantially as described.

8. In a fire-escape, an automatic lowering device comprising a frame, a sectional shaft journaled therein, a pulley on each shaft member, a carrier-belt on each pulley respectively reeled in opposite directions, a train of

retarding-gears for said shaft, means for disconnecting the same, and mechanism for locking said train, substantially as described.

9. In a fire-escape, the device B, comprising the frame, the sectional shaft 21, journaled therein, and bearing-pulleys 23, the belts 24 and 25 on said pulleys, a ratchet on each shaft-section having their teeth respectively pitched in opposite directions, and pawls pivoted to the main gear of an escapement-train in engagement with said ratchets, substantially as described.

CHRISTIAN SCHNEIDER.
BERNARD MASCHINO.

Witnesses:
CHARLES F. VON EUW,
DAVID SPENCE.