June 30, 1931. P. H. ESBJORNSON 1,812,041

WINDOW

Filed July 29, 1929 2 Sheets-Sheet 1

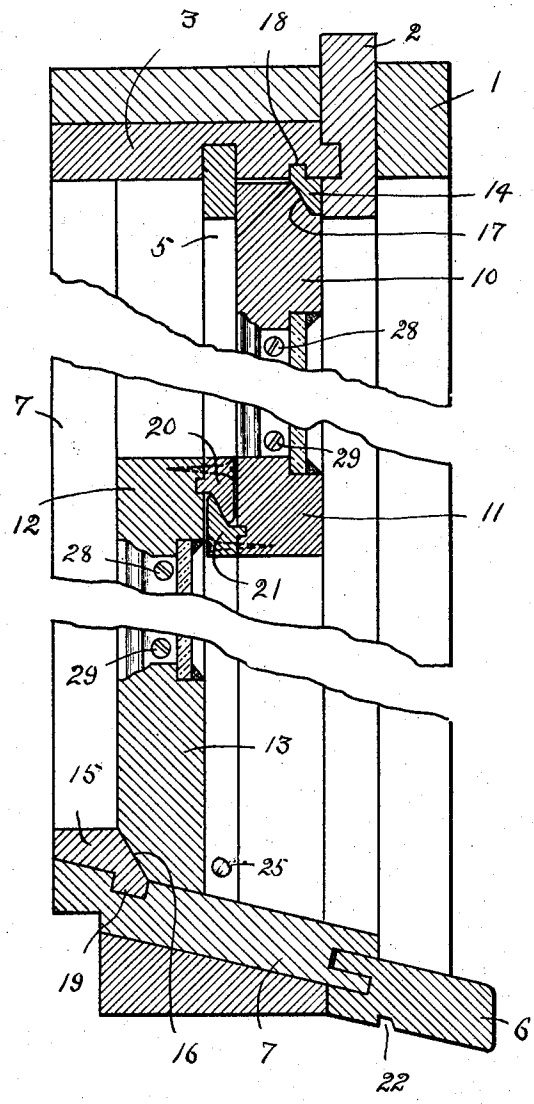

Fig. 1.

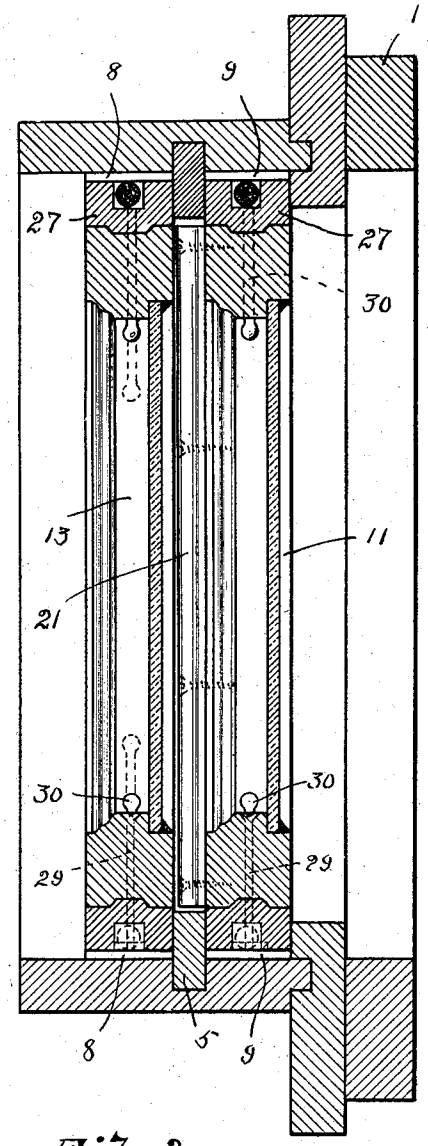

Fig. 2.

Inventor

Per H. Esbjornson.

By Geo. Stevens.

Attorney

June 30, 1931. P. H. ESBJORNSON 1,812,041

WINDOW

Filed July 29, 1929 2 Sheets-Sheet 2

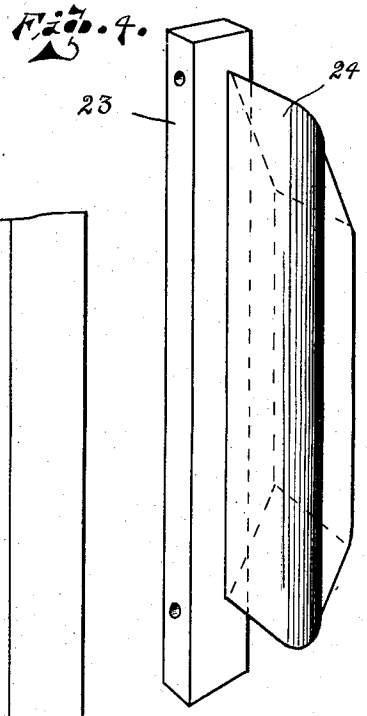

Fig. 4.

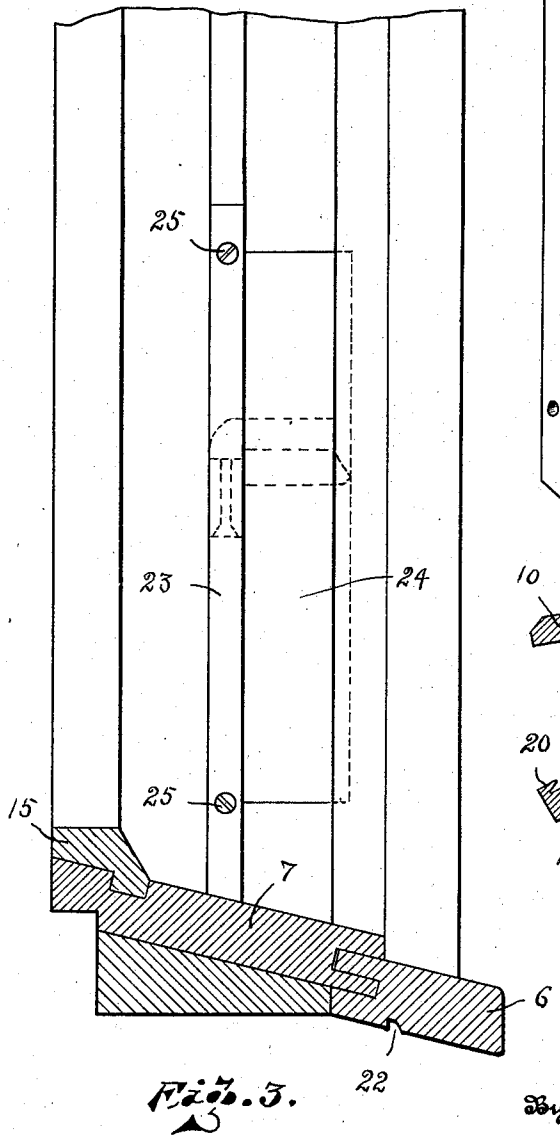

Fig. 3.

Fig. 5.

Inventor

Per H. Esbjornson.

By Geo. Stevens.

Attorney

Patented June 30, 1931 1,812,041

UNITED STATES PATENT OFFICE

PER H. ESBJORNSON, OF DULUTH, MINNESOTA

WINDOW

Application filed July 29, 1929. Serial No. 381,818.

This invention relates to window installation and has special reference to improvements in such as pertains to the common double sash windows as used in building construction.

The principal object is to provide a more conveniently assembled novel structure than illustrated in my copending applications Serial Numbers 244,162 and 322,865.

Other objects and advantages of the novel assembly will appear in the further description of the invention, the preferred form of which is illustrated in the accompanying drawings, forming part of this application, and wherein

Figure 1 represents a fragmental vertical section through one of the improved window assemblies;

Figure 2 is a horizontal sectional view;

Figure 3 is a somewhat enlarged vertical section similar to Figure 1 but only of the lower part and sill of the window showing an elevation of the novel form of weight well entrance;

Figure 4 is an enlarged perspective view of the closure for the weight well entrance; and

Figure 5 is a vertical section of a complete window assembly illustrating the adjustability of the sectional sash portions.

In the drawings, 1, 2, 3, 4, 5, 6, and 7 represent, respectively, the outer stile head blind stop, head jam, sill, parting strip, auxiliary sill, and innermost stop, while 8 and 9 represent the inner and outer sashways respectively.

10 and 11 represent the upper and lower rails of the upper sash and 12 and 13 represent respectively the upper and lower rails of the lower sash.

As one of the principal objects of the invention is to provide means whereby both the upper and lower sash will automatically tend to hug the parting strip when the windows are in closed position, I have provided the auxiliary head blind stop 14 adjacent the innermost lower edge of the head blind stop 2, and a somewhat similarly shaped inclined auxiliary sill stop 15, the latter being inclined as at 16 for cooperative engagement with the similarly inclined edge of the lower rail of the lower sash; while 17 represents the inclined portion of the stop 14 for cooperative engagement with the similarly inclined upper outer edge of the upper rail 10 of the upper sash, when as is obvious, the windows are in closed position.

It is true that I have shown a somewhat similar inclined auxiliary stop in my former application, but such stops in this application are novel in that they are scarfed, the one 14 as at 18 into the head jam 3, and the one 15 as at 19 into the upper face of the sill 4; and either or both may be fastened as by screws or the like as desired.

Now, while I have shown in my former application interlocking engagement of the meeting rails of the two windows, such interlocking arrangement has the property of drawing the rails of the window together when finally closed. In the present structure it is obvious that such means is provided by the engagement of the inclined tongued auxiliary rails 20 and 21, the former fixed as by screws or the like to the upper rail of the lower sash and the latter similarly attached to the lower rail of the upper sash. These auxiliary rails are further novel in that they are scarfed or tongued and grooved into their respective supports, insuring a tight draft-proof connection. It is obvious that these auxiliary rails are of a thickness less than the minimum distance between the rails of the window so as to insure tightly holding the windows, when closed, against the parting strip 5. Furthermore these auxiliary strips being readily removable result in a marked convenience in the construction and assembly of such a window as against any attempt at forming the strips as integral parts of their respective holding members.

Another novel feature of my present window assembly is that of the tongued and grooved connection of the auxiliary window sill 6 to the window sill proper, the upper face of the auxiliary sill being stepped beneath that of the sill proper and provided with a groove 22 in the lower face thereof for tongue and groove connection with the siding or sheathing of the building; and furthermore making it possible to assemble any

number of windows in close juxtaposition with a single auxiliary sill.

A further novel feature of my present assembly is that the entrance to the weight wells are accomplished through a stop and side wall of the window frame; the closure comprising a single unit as shown in Figure 4, embodying a portion 23 of the cut stop and the wedge shaped portion 24 of the side member of the window frame, or bottom of the sashway, and which I propose to hold in position by means of suitable screws 25 through the stop portion thereof.

A still further novel feature of my invention is that clearly illustrated in Figures 2 and 5 of the drawings wherein the cheek rails 26 are made in two cooperative parts, including that portion 26 and that other cooperative portion 27; they being held together when in normal operative position by suitable screws one adjacent the uppermost end of each rail as at 28 and one adjacent the lowermost end as at 29. Just conveniently above the latter are placed removable pins 30 which afford pivotal connection of the parts of the rail when the screws 28 and 29 are removed so that the windows may be tipped upon such pivotal connection downwardly and inwardly as shown in Figure 5 for convenience in cleaning both sides thereof from the interior of the building. In order to provide a weather tight union between the parts 26 and 27 of the rails I have shown them as united by means of a rather distorted, shallow and widened tongue and groove joint, it being shallow for the purpose of readily permitting of the yielding of the parts when the windows are lowered, and insuring a perfect alignment when assembled in normal position by the attaching means previously described.

From the foregoing it is evident that I have devised a novel form of window assembly, the advantage of separable parts, convenience in setting up as well as caring for same, and the possibility of readily producing a mullion window from the use of a plurality of single window frames and the auxiliary sill, being readily apparent to those versed in the art.

Having thus described my invention, what I claim and desire to secure by Letters Patent, is:

A double sash window assembly of the type described having means cooperatively engageable with the sashes for causing them to uniformly impinge the parting strip of the window, said means characterized by being scarfed into the supports therefor, and removably attached to said supports.

In testimony whereof I affix my signature.

PER H. ESBJORNSON.

65