May 10, 1927. 1,627,968

F. W. HAMMER

TORPEDO LAUNCHING MEANS FOR AEROPLANES

Filed Aug. 6, 1924

Fig. 1.

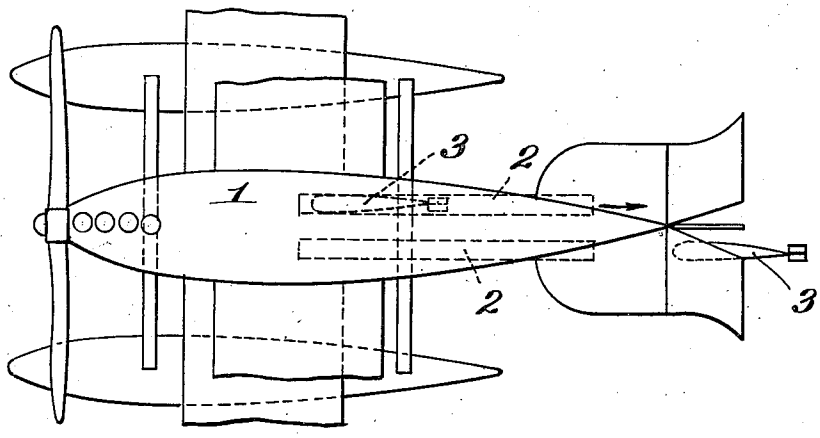

Fig. 2.

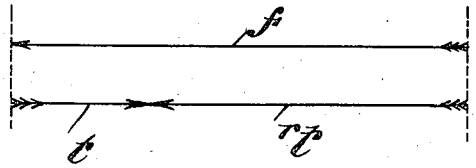

Fritz W. Hammer

Inventor

By his Attorney Adams & Co

Patented May 10, 1927. 1,627,968

UNITED STATES PATENT OFFICE.

FRITZ W. HAMMER, OF LICHTERFELDE, NEAR BERLIN, GERMANY, ASSIGNOR TO F. W. HAMMER CORPORATION, A CORPORATION OF NEW YORK.

TORPEDO-LAUNCHING MEANS FOR AEROPLANES.

Application filed August 6, 1924, Serial No. 730,520, and in Germany October 4, 1923.

The present invention has relation to a novel and improved method of launching torpedoes from aeroplanes, and to means for carrying out the same.

In launching torpedoes from aeroplanes, one method employed has been to discharge the same vertically downward while approaching the object attacked at the high velocity necessarily maintained in heavier-than-air flying machines.

Special steering planes on the torpedo cause it to assume a downwardly slanting forward direction before it strikes the water. This requires a special construction of the launching tube as well as depending upon the use of special apparatus upon the torpedo itself to change its position while falling.

In other cases a forwardly pointing torpedo is discharged forwardly from a launching tube which may be shifted or adjusted in vertical or horizontal plane; and again in some cases the torpedo has been simply released and allowed to drop into the water, pointed forward, while the aeroplane was moving toward the object attacked. The torpedo reaches the water in a direction and with a speed determined by the direction and flying velocity of the aeroplane from which it is launched.

This mode of operation has the advantage of a simplicity, but on the other hand it makes it impossible to enploy any structure under the aeroplane body which might obstruct the free descent of the torpedo. Devices for launching in this manner can therefore only be employed with aeroplanes not provided with the transverse under bracing essential to combined lightness and strength. Inasmuch as the torpedo and its launching means add greatly to the total weight, this impairment of strength is a serious disadvantage.

Another very important disadvantage of the former methods of launching is that the torpedo necessarily partakes of the very high velocity found advantageous in the operation of aeroplanes. This subjects the torpedo to a very violent shock upon striking the water, producing undue strains often leading to damage; and, moreover, the velocity of the torpedo in the water is thus raised beyond that which is suitable for its efficient operation.

The present invention does away with all these disadvantages while making it possible to employ known launching means, but in a new way. It is also to be understood that this invention may be applied to the discharge of bombs and the like, whether intended to fall vertically from the point occupied by the aeroplane at the moment of discharge or otherwise.

The underlying principle of the invention lies in the discharge from the aeroplane either directly backward or in a direction having a material backward component, so that the torpedo or bomb moves forward with a velocity less than that of the aeroplane by an amount equal to the rearward velocity with which it is discharged from the aeroplane. In the case of bombs this rearward velocity may be made equal to the forward velocity of the aeroplane where vertical descent is desired. Indeed it is within the invention to make the rearward discharge velocity greater than the forward velocity of the aeroplane.

In the case of torpedoes, the rearward discharge velocity is considerably less than the forward velocity of the aeroplane, and the torpedo, pointed forward, is discharged backward on an inclined position pointed downward.

The invention is illustrated in the accompanying drawing wherein Figure 1 is a diagrammatic top plan view of one form of aeroplane provided with my invention, and Figure 2 is a mathematical diagram of velocity ratios.

The body of the aeroplane is indicated at 1, and at 2, 2, there are indicated two launching tubes of any appropriate known construction, in one of which a torpedo is indicated, pointing forward. The vertical inclination of the launching tubes cannot, of course, be here shown, but it may be made to suit the conditions to be met and the trajectory desired. The tubes 2 may be fixed or adjustable as desired.

By the use of launching means thus placed, the torpedo 3 may be discharged rearward from the torpedo, unimpeded by transverse bracing means under it; the torpedo being ejected tail first, preferably inclined point down.

In Figure 2, the distance f indicates the velocity of the flying machine in the direction of the accompanying arrow; while t indicates the oppositely directed lower velocity

of discharge of the torpedo from the tube. It is therefore clear that $r\ t$ will represent to resultant or residual forward velocity of the torpedo with relation to the earth's surface.

Any suitable launching tube, whether of a character already well known or otherwise, may be employed without departing from the broad scope of the invention.

What I claim is—

The method of launching a torpedo from an advancing aeroplane which consists in discharging the same tail first in an inclined upward and rearward direction from beneath the aeroplane.

In testimony whereof I have hereto set my hand on this 18th day of July, 1924.

F. HAMMER.