June 16, 1925. 1,542,120

H. WIDRE

ADVERTISING APPARATUS

Filed April 16, 1923 3 Sheets-Sheet 1

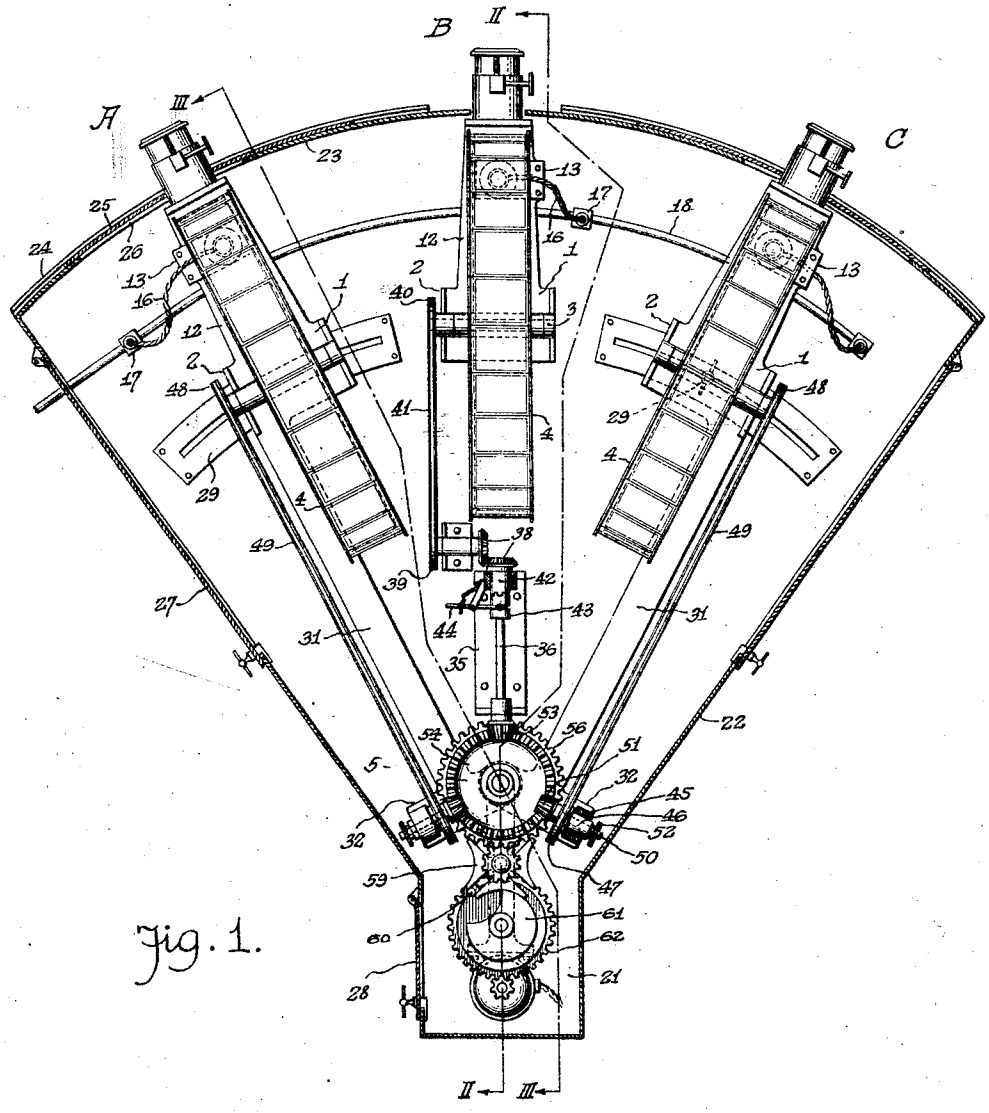

Fig. 1.

Inventor
Harry Widre,

By Bachert & Bachert

Attorneys

June 16, 1925. 1,542,120

H. WIDRE

ADVERTISING APPARATUS

Filed April 16, 1923 3 Sheets-Sheet 2

Fig. 2.

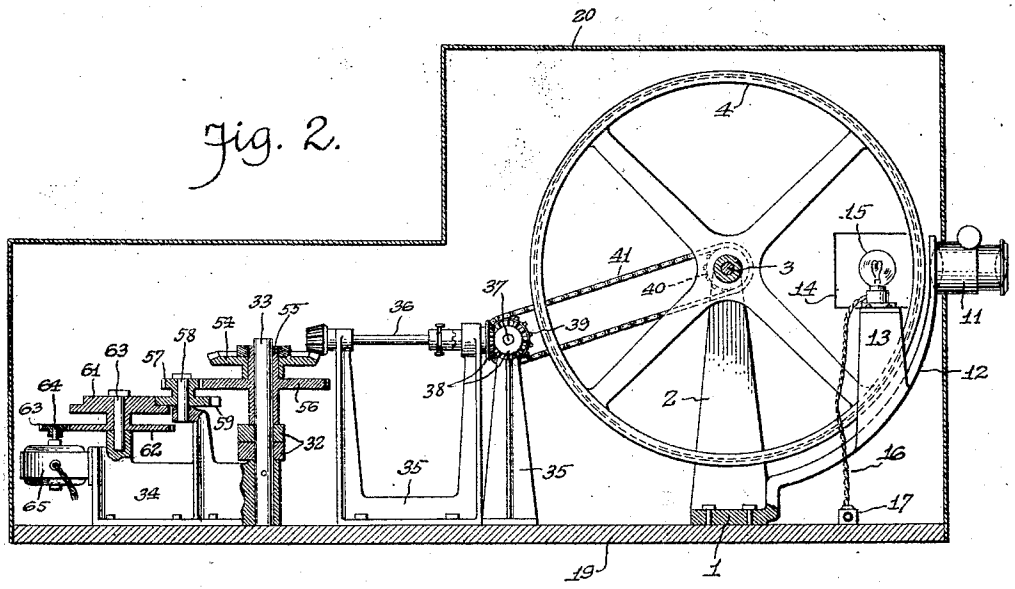

Fig. 3.

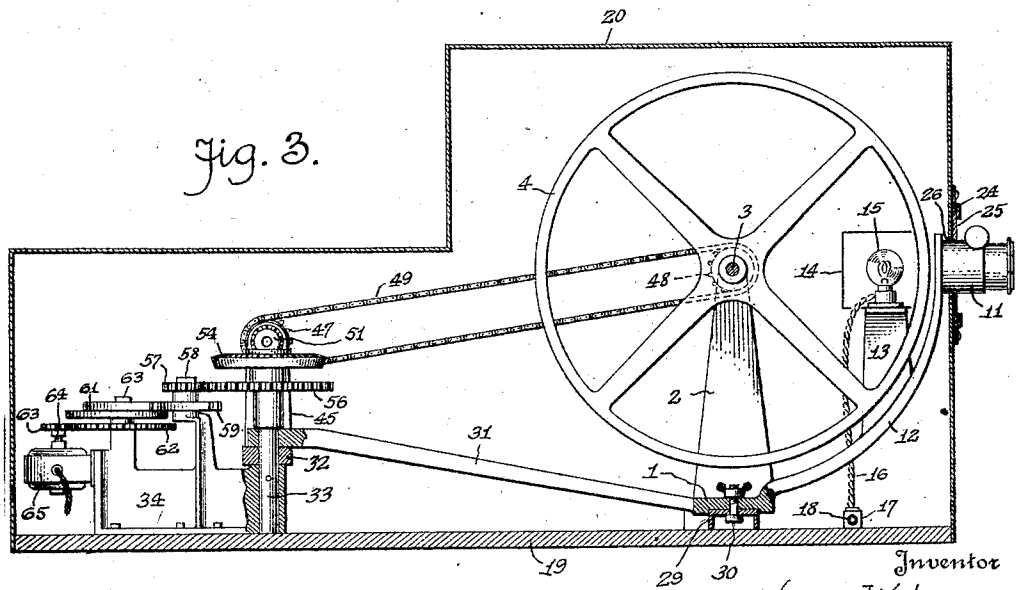

Inventor

Harry Widre,

By Rachlis & Rachlis

Attorneys

June 16, 1925. 1,542,120

H. WIDRE

ADVERTISING APPARATUS

Filed April 16, 1923 3 Sheets-Sheet 3

Fig. 7.

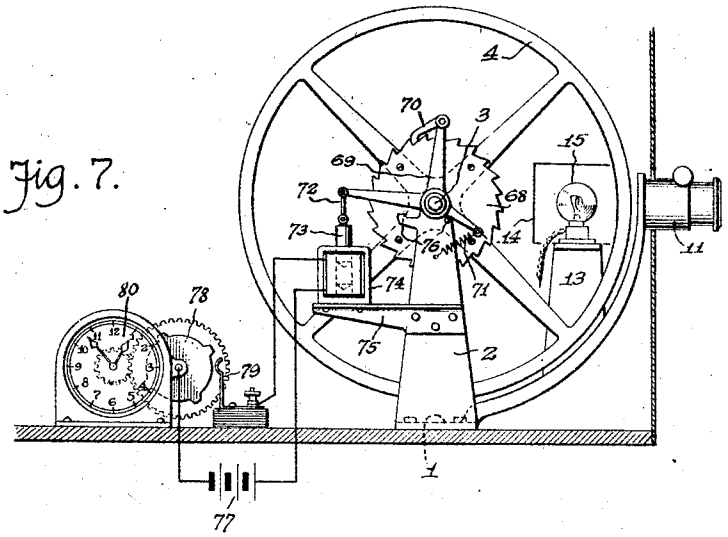

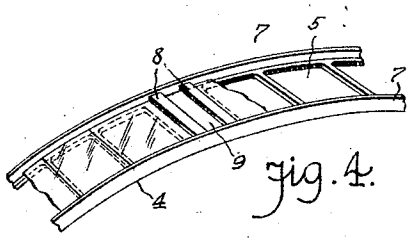

Fig. 4.

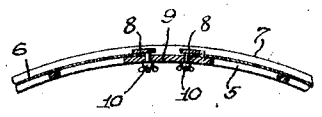

Fig. 5.

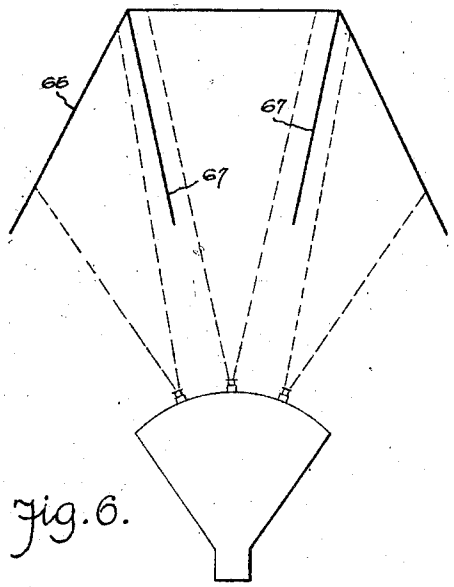

Fig. 6.

Inventor

Harry Widre

By

Attorneys

Patented June 16, 1925. 1,542,120

UNITED STATES PATENT OFFICE.

HARRY WIDRE, OF DETROIT, MICHIGAN.

ADVERTISING APPARATUS.

Application filed April 16, 1923. Serial No. 632,333.

To all whom it may concern:

Be it known that I, HARRY WIDRE, a citizen of Russia, residing at Detroit, in the county of Wayne, State of Michigan, have invented certain new and useful Improvements in Advertising Apparatus, of which the following is a specification, reference being had therein to the accompanying drawings.

This invention relates to an advertising apparatus by which a large number of signs, pictures, or other display matter can be intermittently projected on the screens, walls or other surfaces, and the apparatus has been designed so that it may be mounted on a suitable vehicle for street advertising or may be located in the windows or show cases of buildings for attracting the attention of the public. There are many ways in which the apparatus may be used for displaying advertisements and my invention in its broadest aspect involves an apparatus that is automatic in its action for intermittently displaying advertisements or other matter, the apparatus including a plurality of projecting machines which may be actuated in synchronism from a prime mover. Each projecting machine includes a rotary film, plate, or negative holder adapted to support a large number of negatives which may be intermittently moved into position for projection upon an adjacent surface, as a screen.

My invention also aims to provide a plurality of picture projecting machines wherein the picture negatives are intermittently moved from a single source of power with the machines adjustable relative to the source of power for projecting pictures or signs in desired directions. Provision is also made for operating the machines in synchronism or one machine independent of the others.

My invention further aims to provide an advertising apparatus by which a large volume of advertising matter may be brought to public attention at a minimum expense, and the construction of my apparatus will be hereinafter specifically described and then claimed.

Reference will now be had to the drawings, wherein

Figure 1 is a plan of the apparatus with the housing or hood in horizontal section;

Fig. 2 is a longitudinal sectional view taken on the line II—II of Fig. 1;

Fig. 3 is a similar view taken on the line III—III of Fig. 1;

Fig. 4 is a perspective view of a portion of one of the rotary film holders;

Fig. 5 is a longitudinal sectional view of the same;

Fig. 6 is a diagrammatic view illustrating an arrangement of screens relative to the advertising apparatus, and

Fig. 7 is a side elevation of one of the picture projecting machines illustrating a modified form of operating mechanism for the same.

The advertising apparatus may include a plurality of projecting machines and in the drawings three machines have been shown and generally designated A, B and C, the machine B being stationary and the machines A and C adjustable relative thereto.

The stationary machine B comprises a bearing 1 having opposed arms 2 with the shaft 3 journaled in the upper ends of said arms. Mounted on the shaft 3 is a cylindrical skeleton frame or holder 4 having equally spaced apertures 5 throughout the periphery thereof and the periphery of said holder is channel shaped in cross section so that a film or diapositive 6 may be placed about the holder between the side flanges thereof. The film 6 is drawn taut and its ends held under clamping bars 8 retained on a transverse support 9 by nut equipped bolts 10, said clamping bars constituting fasteners by which the ends of the film may be firmly held against accidental displacement. The pictures or other matter on the films 7 are adapted for matched registration with the apertures 5 of said holder and the film pictures or signs are adapted to be intermittently shifted into alinement with a conventional form of projector 11 carried by the upper end of a third arm 12 forming part of the bearing 1.

At one side of the arm 12 is a bracket 13 for a conventional form of lamp housing 14, said bracket extending into the holder 4, adjacent its inner wall so that a lamp 15 within the lamp housing will be in proximity to the apertures 5 of the film holder as said apertures are shifted to a position of rest between the lamp 15 and the projector 11. The lamp 15 has leading-in conductors 16 from a socket 17 carried by a conduit 18 adjacent the bearing 1, said conduit permitting of leading-in wires being safely carried to the stationary and movable machines of the apparatus.

The bearing 1 of the stationary machine

B is fixed on a floor or platform 19 that may represent the bed or chassis of a vehicle, the floor of a room or the floor of a dark cabinet 20 having a motor compartment 21, diverging walls 22 and an arcuated wall 23, said wall being provided with guideways 24 for slide shutters 25 fixed relative to the projectors 11 of the adjustable machines A and C. The slide shutters 25 are adapted to normally close openings 26 in the wall 23, and the walls 22 are provided with doors 27, while the motor compartment 21 has a door 28. The cabinet 20 provides an enclosure for the apparatus and said compartment may be fire proof to permit of the films or negatives being safely used.

The adjustable projecting machines A and C are very similar to the stationary machine B, with the exception that the bearing 1 of each movable machine is slidable on a curved slotted base or support 29 and adapted to be fixed thereon by a nut equipped bolt 30 which clamps the bearing to the base or support, as best shown in Fig. 3. The bearings of the adjustable machines have rearwardly extending arms 31 with the inner converging ends thereof provided with cross heads 32 arranged so that the inner ends of said heads overlap and may be pivotally held by a fixed post or shaft 33 mounted in a frame 34 fastened to the platform or floor 19. With the adjustable machines A and C pivotally held relative to the stationary machine B, said adjustable machines can be swung in an arc and together with the stationary machine project pictures or signs in diverging directions, thus permitting of separate screens being positioned for the display of the projected pictures or signs. The adjustable machines A and C have leading-in wires and conductors similar to the stationary machine B.

Between the frame 34 and the stationary machine B are bearings 35 for shafts 36 and 37 provided with beveled meshing gear wheels 38. On the shaft 37 is a sprocket wheel 39 longitudinally alining with a sprocket wheel 40 on the shaft 3 of the stationary machine and trained over these sprocket wheels is an endless sprocket chain 41.

The gear wheel 38 of the shaft 36 may be carried by a clutch member 42 loose on the shaft 36 and adapted to be fixed for rotation with said shaft by a shiftable clutch member 43 having an operating lever 44 that may be held in an adjusted position relative to the bearing 35. It is through the medium of the clutch members 42 and 43 that the stationary machine B may be disconnected from the prime mover or source of power employed to operate all of the projecting machines.

On the outer ends of the cross heads 32 are bearings 45 for the hubs 46 of sprocket wheels 47 longitudinally alining the sprocket wheels 48 on the shafts 3 of the adjustable machines A and C. Sprocket chains 49 are trained over the sprocket wheels 47 and 48.

Extending through the hubs 46 of the sprocket wheels 47 are the spindles 50 of beveled gear wheels 51 and said beveled gear wheels may have the hub portions thereof clamped against the sprocket wheels 47 by tightening nuts 52 on the spindles 50. It is by virtue of these nuts that either of the beveled gear wheels 51 may idle and permit of one adjustable projecting machine being used independent of the other.

On the rear end of the shaft 36 is a beveled gear wheel 53 and this wheel, together with the beveled gear wheels 51, meshes with a sun gear 54 having its hub fixed on the hub 55 of a horizontally disposed large gear wheel 56, said gear wheel having its hub 55 loose on the upper end of a post or shaft 33.

The large gear wheel 56 meshes with the small gear wheel 57 rotatable on a shaft 58 supported by the frame 34, said small gear wheel forming part of a radially slotted escapement member 59 adapted to be intermittently rotated by engagement with a pin 60 carried by a pin wheel 61 having its hub portion integral with a horizontally disposed gear wheel 62 loose on a pin or shaft 63 carried by the frame 34. The pin wheel 61 has a hub portion cut away to provide clearance for portions of the escapement member 59 during its movement by the pin 60 entering slots of said member.

The large gear wheel 62 meshes with a small gear wheel 63 mounted on the armature shaft 64 of an electric motor 65 supported from the frame 34 and said electric motor may receive power from an ordinary electric lighting circuit.

From the foregoing it will be observed that when the electric motor 65 is placed in operation that the sun gear 54 will be intermittently rotated and by virtue of the power transmission mechanism between the sun gear and the projecting machines the rotary holders 4 of said machines may be intermittently moved, thus permitting each picture or sign carried by the holders 4 to remain at rest a short interval of time between the lamp and the projector of each machine, so that each picture will be thrown upon screens or surfaces in spaced relation to the cabinet 20.

In Fig. 6 of the drawings I show an arrangement of screens 66 representing surfaces on which pictures or signs may be projected, said screens being disposed at an angle relative to each other and somewhat

isolated by converging partitions 67. It is in this connection that the screens 66 and the partitions 67 may represent a portion of a vehicle body in which the projecting machines may be operated and with the vehicle moving about the streets an extensive advertising campaign may be carried on.

It is obvious that each projecting machine may be used independent of the others, as a unit, and I may use various kinds of mechanism for intermittently actuating the rotary film holder. As an instance of such mechanism there is shown in Fig. 7 an electrically operated and timed ratchet mechanism including a ratchet wheel 68 fixed to the film holder 4. Loose on the shaft 3 of the film holder is a three-arm bell crank 69 having one of its arms provided with a gravity pawl 70 engaging the ratchet wheel 68. Another arm is connected by a coiled retractile spring 71 to one of the arms 2 of the bearing 1. The remaining arm of the bell crank 69 is pivotally connected by a link 72 to the core 73 of a solenoid 74, carried by a bracket 75 attached to the arm 2. This arm may be provided with stops 76 to limit the rocking movement of the bell crank 69.

The solenoid 74 is in circuit with a suitable source of electrical energy 77 and a switch including a rotary contact member 78 and a yieldable stationary contact member 79. The rotary contact member 78 may be driven by a conventional form of clock mechanism 80 and this clock mechanism may be of that form which can be used as a time switch for regulating the time during which the machine is to be used by turning on and off the electrical current at specified times, thus making the machine automatic throughout.

It is thought that the operation and utility of my invention will be apparent without further description, and while in the drawings there are illustrated the preferred embodiments of my invention, it is to be understood that the structural elements are susceptible to such changes, in size, shape and manner of assembling as fall within the scope of the appended claims.

What I claim is:—

1. An advertising apparatus comprising diverging projecting machines, a dark cabinet for said diverging projecting machines, some of said machines being adjustable relative to a common pivot in said cabinet, means for fixing the adjustable machines relative to the pivot, and slidable shutters forming part of said cabinet and through which shutters said machines extend.

2. An advertising apparatus comprising horizontally pivoted projecting machines adapted to be swung in an arc, each machine including a rotary diapositive holder, and means adjacent the pivot of said machines for intermittently rotating the holders of said machines.

In testimony whereof I affix my signature in presence of two witnesses.

HARRY WIDRE.

Witnesses:
ANNA M. DORR,
KARL H. BUTLER.