J. TICHY.

TELEPHONE DISINFECTANT ATTACHMENT.

APPLICATION FILED DEC. 9, 1912.

1,068,949. Patented July 29, 1913.

Fig. 1.

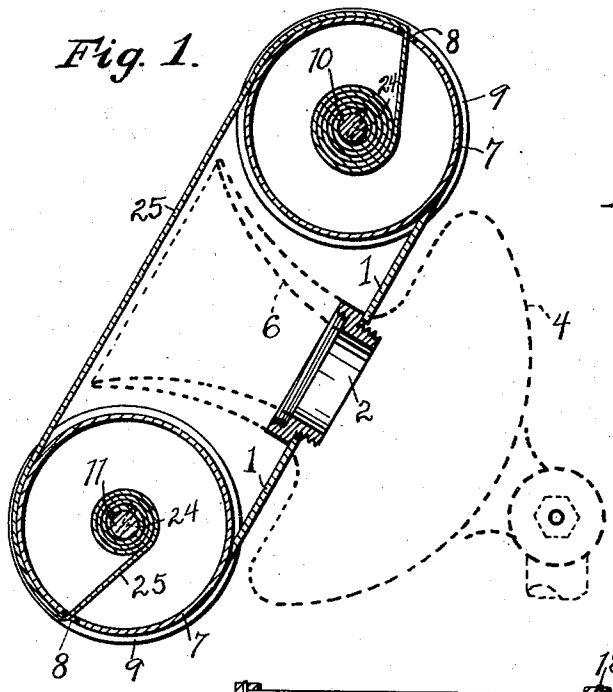

Fig. 3.

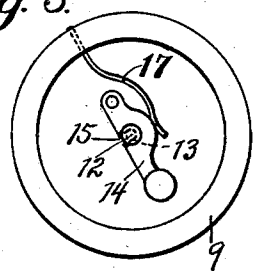

Fig. 4.

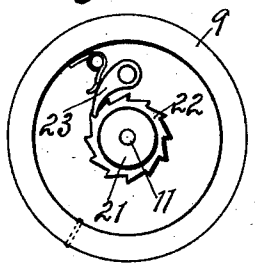

Fig. 2.

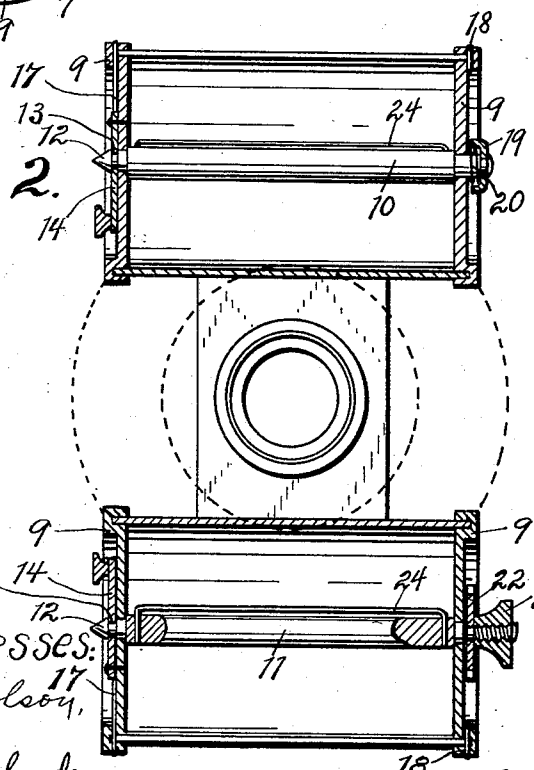

Witnesses:

T Colson,

B. G. Richards

Inventor:

Joseph Tichy,

By Joshua R. H. Potts

his Attorney.

COLUMBIA PLANOGRAPH CO., WASHINGTON, D. C

UNITED STATES PATENT OFFICE.

JOSEPH TICHY, OF CHICAGO, ILLINOIS.

TELEPHONE DISINFECTANT ATTACHMENT.

1,068,949. Specification of Letters Patent. Patented July 29, 1913.

Application filed December 9, 1912. Serial No. 735,792.

To all whom it may concern:

Be it known that I, JOSEPH TICHY, a citizen of the United States, and a resident of the city of Chicago, county of Cook, and State of Illinois, have invented certain new and useful Improvements in Telephone Disinfectant Attachments, of which the following is a specification.

My invention relates to improvements in disinfectant attachments and has for its object the provision of a device of this character which is of improved construction and operation.

The invention consists in the combinations and arrangements of parts hereinafter described and claimed.

The invention will be best understood by reference to the accompanying drawings forming a part of this specification, and in which,

Figure 1 is a sectional view of an attachment embodying my invention, and shown in position of use, Fig. 2, an inclined section of the attachment taken at substantially right angles to that illustrated in Fig. 1. Fig. 3, an end view of one of the housings employed in the construction, and Fig. 4, an end view of the opposite end of said housing.

The preferred form of construction as illustrated in the drawing comprises a suitable supporting member 1 having a central nipple 2 therein. This nipple extends inwardly through the central portion of supporting member 1 and is provided at its inner end with external threads adapted to fit the usual mouth piece socket in the telephone transmitter 4. The outer end of nipple 2 is internally threaded to receive the usual mouth piece 6 and constitute a socket therefor. Two parallel cylindrical housings 7 are secured to the opposite ends of supporting member 1, as shown and each of said housings is provided in its outer side with a longitudinal slot 8, extending the full length of the side of the housing. Each of said housings is provided with removable ends 9 which are recessed in their peripheries to receive housings 7, as shown. Each of said ends is centrally perforated to constitute a mounting for shafts 10 and 11, and each of said shafts is provided with a pointed end 12 adapted to pass through the perforation in the coresponding end 9. Each of the pointed ends 12 is provided with a locking groove 13 adapted to receive a locking lever 14 which is pivoted to the corresponding end 9 and is provided with a recess 15 adapted to engage said ends. Each of the locking levers 14 is yieldingly held in locking position by means of a spring 17, the outer end of spring 17 being passed through the recess in the corresponding end 9 in position to engage slot 8 in the corresponding housing to lock the corresponding end 9 against rotation relatively to its housing. Locking pins 18 are also passed through the recess in the other ends 9 in position to engage the other ends of slots 8 to lock the other ends 9 against rotation as before.

At its end opposite the pointed end 12, shaft 10 carries a cap 19 imprisoning a helical spring 20, said cap and spring being provided to place a frictional resistance on the rotation of shaft 10. Shaft 11 is provided with an operating knob 21 and a ratchet wheel 22 which coöperates with a spring-held pawl 23 to prevent retrograde movement of shaft 11. Each of the shafts 10 and 11 are provided with a wire loop 24 for securing the ends of a paper roll 25 thereto.

In use one end of the paper roll is secured by loop 24 to shaft 10 and said roll rolled thereon. This roll is then placed in position in the lower housing 7, the removable ends and longitudinal slot in said housing greatly facilitating this operation. Then, the free end of the roll is passed over mouth piece 6 and inserted through slot 8, said end having been previously secured to the other shaft 11, the removability of the ends 9 and slot 8 facilitating this manipulation. By this arrangement it will be observed, that the paper strip 25 may be readily passed over mouth piece 6. Paper strip 25 is impregnated with a chemical which will change color when subjected to the action of the human breath, so that when a telephone is used with one portion of the paper strip over the mouth piece, this use is made evident by the change in the color of the paper. The paper is also impregnated with a suitable disinfectant for the annihilation of germs.

While I have illustrated and described the preferred form of construction for carrying my invention into effect, this is capable of variation and modification without departing from the spirit of the invention. I, therefore, do not wish to be limited to the precise details of construction set forth, but

desire to avail myself of such variations and modifications as come within the scope of the appended claims.

Having described my invention what I claim as new and desire to secure by Letters Patent is:

1. A device of the class described comprising a support adapted to be secured to a telephone transmitter; two housings on said support, each of said housings being provided with a longitudinal slot in its outer side and with removable ends; paper roll shafts rotatably mounted in the ends of said housings and provided with locking means for securing said ends in position; and means for rotating one of said shafts, substantially as described.

2. A device of the class described comprising a support adapted to be secured to a telephone transmitter; two housings on said support, each of said housings being provided with a longitudinal slot in its outer side and with removable ends; paper roll shafts in said housing; means for rotating one of said shafts; and a frictional resistance on the other of said shafts, substantially as described.

3. A device of the class described comprising a support adapted to be secured to a telephone transmitter; two housings on said support, each of said housings being provided with a longitudinal slot in its outer side and with removable ends; paper roll shafts rotatably mounted in the ends of said housings and provided with locking means for securing said ends in position; means for rotating one of said shafts; and a frictional resistance on the other of said shafts, substantially as described.

4. A device of the class described comprising a support adapted to be secured to a telephone transmitter, said support being provided with a central nipple, the inner end of which is exteriorly threaded to fit the usual mouth piece socket and the outer end of which is internally threaded to receive the usual mouth piece; two housings on said support, each of said housings being provided with a longitudinal slot in its outer side and with removable ends; paper roll shafts in said housings; and means for rotating one of said shafts, substantially as described.

In testimony whereof I have signed my name to this specification in the presence of two subscribing witnesses.

JOSEPH TICHY.

Witnesses:
JOSHUA R. H. POTTS,
THOMAS W. COLSON.

Copies of this patent may be obtained for five cents each, by addressing the "Commissioner of Patents, Washington, D. C."