United States Patent

Champaigne, Jr.

[15] 3,665,923

[45] May 30, 1972

[54] FLUSHABLE SANITARY NAPKIN

[72] Inventor: **John F. Champaigne, Jr.**, Neenah, Wis.

[73] Assignee: **Kimberly-Clark Corporation**, Neenah, Wis.

[22] Filed: **Feb. 5, 1970**

[21] Appl. No.: **8,838**

[52] **U.S. Cl.** ..... **128/290 W**

[51] **Int. Cl.** **A61f 13/16**

[58] **Field of Search** 128/287, 290

[56] **References Cited**

UNITED STATES PATENTS

3,370,590	2/1968	Hokanson et al.	128/284
3,395,708	8/1968	Hervey et al.	128/284
3,480,016	11/1969	Constanza et al.	128/284
2,295,016	9/1942	Scribner	128/290 R
2,570,011	10/1951	Stamberger	128/287
2,838,048	6/1958	Kowalski	128/290 R
3,044,467	7/1962	Campau	128/290 R
3,067,747	12/1962	Wolterding et al.	128/290 R
3,078,849	2/1963	Morse	128/290 R
3,111,948	11/1963	Burgeni	128/290 R
3,402,715	9/1968	Liloia et al.	128/287
3,463,154	8/1969	Hendricks	128/287
3,521,639	7/1970	Joa	128/290 R
3,542,028	11/1970	Beebe et al.	128/290 R

Primary Examiner—Charles F. Rosenbaum

Attorney—Daniel J. Hanlon, Jr. and Raymond J. Miller

[57] **ABSTRACT**

A flushable sanitary napkin with adhesive attachment means. A major portion of the wrapper enclosing the absorbent pad is a non-woven web of fibers held together with a water-dispersible binder. The napkin has no end tabs but is provided on its bottom side with a pressure sensitive adhesive area for attachment to a suitable undergarment for support.

7 Claims, 5 Drawing Figures

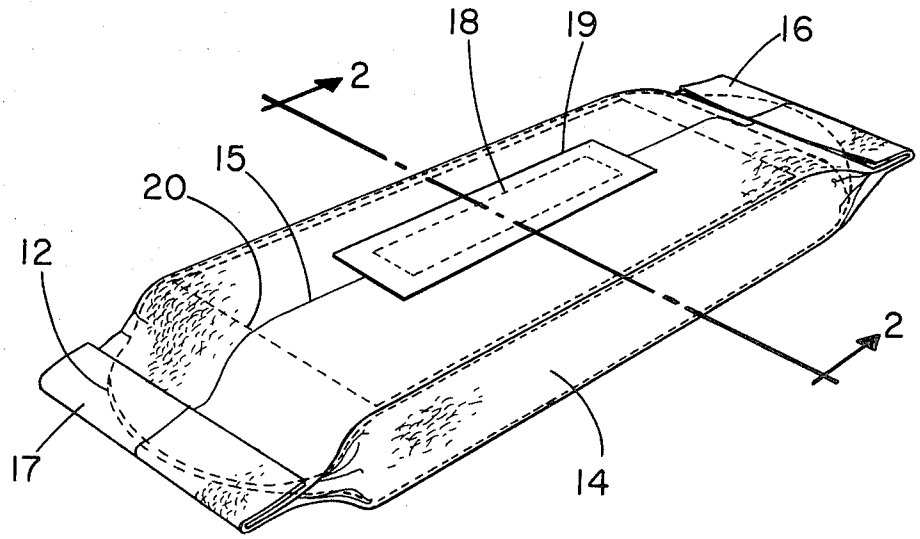

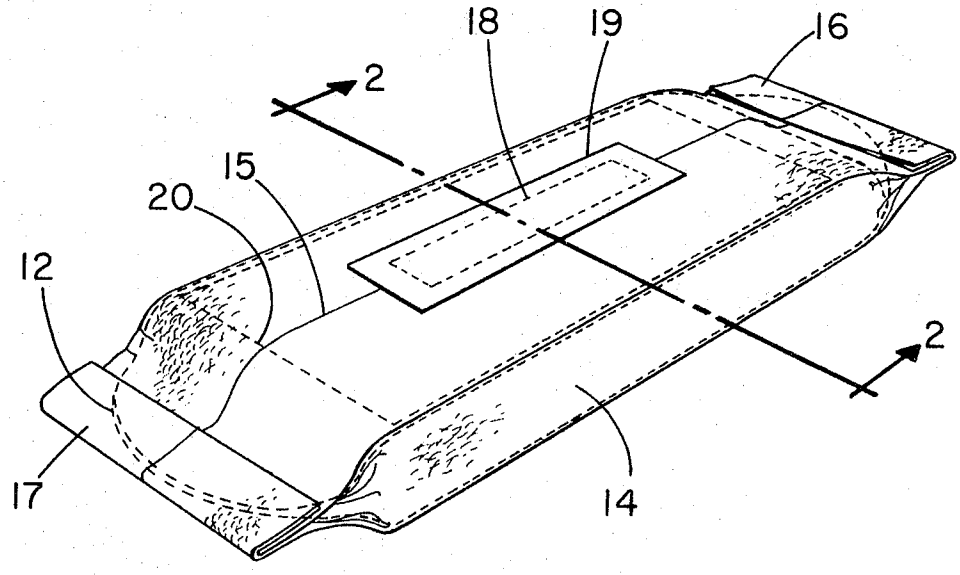

FIG. 1

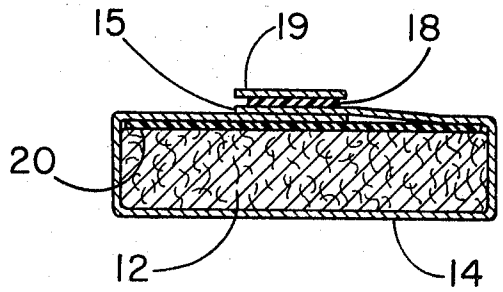

FIG. 2

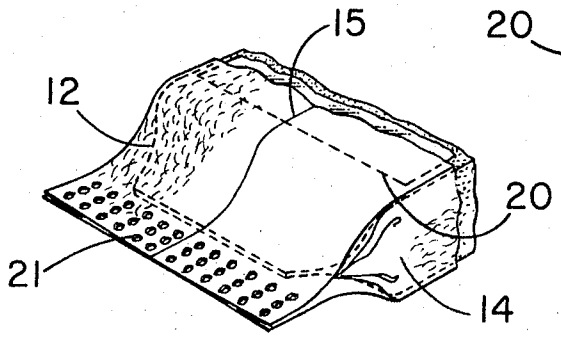

FIG. 3

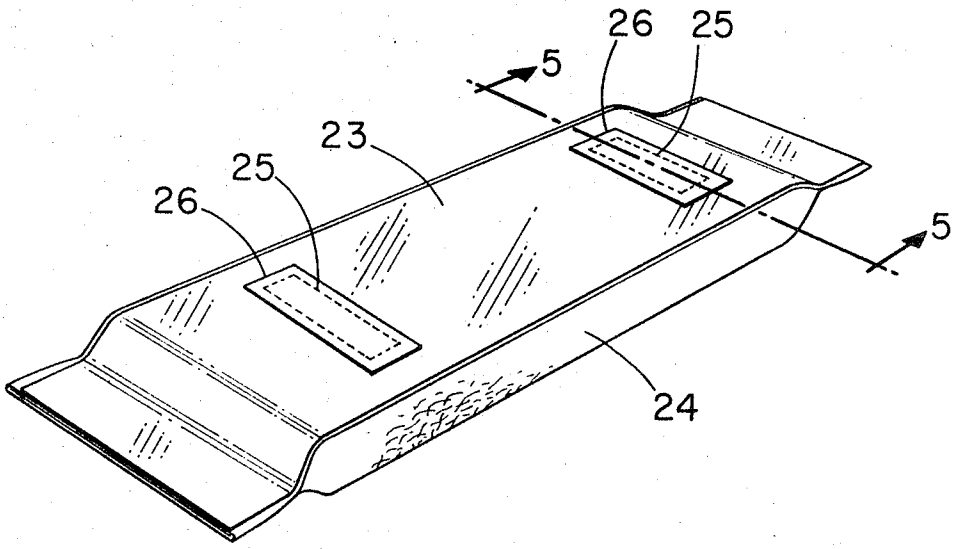

FIG. 4

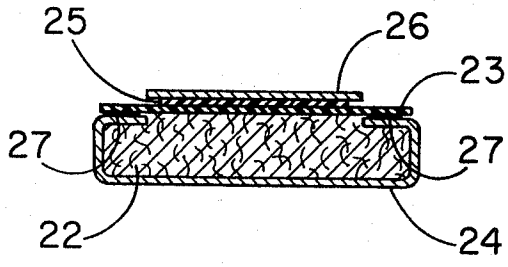

FIG. 5

FLUSHABLE SANITARY NAPKIN

BACKGROUND OF THE INVENTION

In the recently developed art directed toward solving the problem of producing sanitary napkins which are completely flushable in modern sewerage systems, most of the work has been directed toward developing a wrapper material which is strong enough to hold the absorbent elements together in the moist environment encountered during use, and yet which will disintegrate readily when deposited in a water base flushing system. One of the principal difficulties encountered in achieving full flushability arises because most napkins now in vogue require tabs at each end which are attached to a belt or other support device and function to hold the napkin in place during use. In order to make these tabs strong enough to retain the pad securely in place, the adhesive binder in the wrapper and tabs must be sufficiently moisture resistant to remain intact during use. When a binder with the required characteristic is used, the wrapper material becomes so strong that it will not readily disintegrate in water if disposed of in the toilet. In order to overcome this, short tab pads with weaker, more water-sensitive wrappers were developed for use in conjunction with an undergarment as a supplementary support, the pads being held in place by at least one garment attached clasp. Even with this design, however, portions of the wrapper were often so weakened by the fluids encountered during use that the tabs ruptured prematurely and failed to provide their necessary support function. Additional improvement therefore appeared warranted.

In related developments, tabless sanitary napkins are now being produced which are held in position during use by strategically disposed areas of pressure sensitive adhesives. These adhesive areas are usually located on the bottom side of the napkin structure, and function to fasten the napkin to regular undergarments such as panties, briefs, girdles, and the like. The prior art is replete with patents defining napkins of this type. Representative patents include U.S. Pat. Nos. 2,295,016; 2,838,048; 3,044,467; 3,315,677; 3,454,008, 3,463,154; and Swiss Pat. Nos. 295,532; 296,828 and 306,502 among others. While many of these patents state that such napkins are readily disposable, none of them indicate that the napkins are flushable or are designed for flushability. In any event, the construction of all the tabless napkins described in these patents is such that the napkins do not lend themselves to disposal in a toilet, primarily because the pad cannot escape from its enclosing wrapper. Consequently if such disposal were done on a regular basis it could eventually cause plugging or other malfunctioning of the plumbing system.

The present invention is directed to a tabless sanitary napkin suitable for attachment to undergarments by pressure sensitive adhesive, the construction of the said napkin being such that it can be disposed of by flushing without requiring any additional handling or processing.

SUMMARY OF THE INVENTION

The sanitary napkin of this invention comprises the usual elongate pad of highly absorbent material enclosed in an outer wrapper of light-weight fluid pervious material. The wrapper comprises a non-woven fiber web bonded by a water-dispersible binder. In a preferred embodiment, the wrapper is an elongate rectangular sheet folded around the pad with the edges overlapped and sealed by a water-dispersible adhesive similar to that used for binding together the fibers in the non-woven wrapper. The ends of the sheet extend slightly beyond the ends of the pad and are sealed shut by the same or a similar water-dispersible adhesive. Pressure sensitive adhesive in the form of single or multiple strips, patches or the like, is disposed on the back of the pad and covered by a removable protective backing strip. When preparing the napkin for use, all that needs to be done is to remove the protective cover, and the napkin may then be attached to a suitable portion of an undergarment or the like to provide absorbent protection. After use the pad may be safely deposited in a toilet for disposal purposes. The water in the toilet dissolves the water-dispersible binder in the wrapper portion sufficiently to release the absorbent pad components enclosed therein, thus permitting the pad structure to break up readily into its basic fibrous components which can then be flushed away without difficulty. In the preferred embodiment, the only portion of the pad structure which will not disintegrate in a reasonable time is the area in contact with the pressure sensitive adhesive. But these areas are of such small size that they will pass easily through the sewerage system. Most pressure sensitive adhesives are also biodegradable so that eventually they, too, will disintegrate. The pads may also be provided with a conventional baffle of thin polyethylene film which, of course, will not dissolve in water. However, such baffles are generally so small, thin, and flexible that they easily pass through a conventional sewerage system once they are released from the pad structure by the disintegration of the confining wrapper. The baffle may also be made dispersible by making it from a water-soluble polyvinyl alcohol film coated on one side with an insoluble varnish. Such a baffle will eventually disintegrate.

Accordingly, it is an object of this invention to provide a tabless catamenial pad of the type which is adhesively attachable to undergarments and which is safely flushable in conventional water base toilet systems.

Other features, objects and advantages will become apparent by reference to the following specification and accompanying drawings.

BRIEF DESCRIPTION OF THE DRAWINGS

In the drawings:

FIG. 1 is a perspective bottom view of a sanitary napkin made in accordance with the invention.

FIG. 2 is a section taken along line 2—2 of FIG. 1.

FIG. 3 is a fragmentary perspective bottom view of one end of a napkin showing another type of end seal for the wrapper.

FIG. 4 is a perspective bottom view of another embodiment of a napkin in accordance with the invention.

FIG. 5 is a section taken along line 5—5 of FIG. 4.

DESCRIPTION OF THE PREFERRED EMBODIMENT

In the following description, reference should be had to both FIG. 1 and FIG. 2 of the drawing. The perspective view in FIG. 1 shows the bottom side of a tabless sanitary napkin which is comprised of an elongate absorbent core or pad 12 enclosed in a fluid pervious wrapper 14. Wrapper 14 comprises a flat rectangular sheet of non-woven material which encircles pad 12 in conventional tubular style, with overlapped edges of the sheet extending along the bottom face of the pad. The overlying edge portion of the wrapper is indicated as edge 15. The open ends of the tube formed by the wrapper at either end of the pad are flattened, folded back on themselves, and adhesively bonded to form sealed end portions 16 and 17. Wrapper 14 is comprised of a carded web of textile length fibers, such as rayon, bonded by a water-dispersible adhesive, such as a polyvinyl alcohol which is soluble in cold water. The overlap adjacent edge 15, is sealed by a similar water-dispersible adhesive, as are the ends 16 and 17.

An elongate strip of pressure sensitive adhesive 18 (the dotted phantom line 18 in FIG. 1) is disposed centrally on the bottom portion of the enclosing wrapper and is covered by a removable protective strip 19. In the preferred embodiment shown, the napkin structure also has a baffle member of thin impervious plastic film 20, such as polyethylene or the like, interposed between absorbent pad 12 and the bottom portion of outerwrap 14, although such an arrangement is optional.

When the napkin is to be used, it is necessary only to remove protective strip 19 and press the exposed adhesive portion 18 against the crotch area of a panty, girdle, or similar undergarment to maintain the napkin in position where needed until it is finally discarded.

When the used napkin is to be disposed of, it can easily be removed from the supporting garment and, because the

wrapper is held together by a water-dispersible adhesive, can then be dropped into a toilet for disposal. The excess water in the toilet rapidly dissolves the water-dispersible adhesive which binds the fibers in the wrapper together, enabling the flushing action of the toilet to break up the wrapper, release the pad contained therein, and permit the entire napkin structure to disintegrate and be dispersed.

As indicated previously, the pressure-sensitive adhesive areas will not break up at once but these areas are relatively small and should not interfere with disposal since they will eventually degrade. The thin plastic film baffle, when made of a material which will not dissolve, is still flexible and thin enough so that it passes through the plumbing conduits without difficulty. It is, of course, desirable that such baffles be made of a material which will also eventually disintegrate.

While the napkin structure shown in FIG. **1** has the wrapper ends folded back and sealed on themselves with water-dispersible adhesive, other means of sealing the ends may be used as shown in FIG. **3** wherein the ends are simultaneously flattened, cut off, and sealed together without folding back the ends. In this embodiment, the water dispersible adhesive is applied to the wapper ends and dried by a hot pressing action which simultaneously embosses tiny perforations **21** into the pressed area to further aid the bonding action.

While in these preferred embodiments, the overlap seal and end seals employ water-dispersible adhesives, it will be seen that the sealing means can also comprise water-insoluble adhesives which, while holding the sealed areas of the wrapper intact in water, will still permit the major portion of the wrapper to disperse and release the pad components as desired. The small non-dispersible areas are still of flushable size and with a proper choice of adhesives, they too will eventually disintegrate.

FIGS. **4** and **5** illustrate another less desirable but still functional embodiment of the invention.

In this embodiment, the absorbent pad **22** is enclosed by a composite wrapper which comprises the combination of a lower impervious sheet of thin plastic film **23**, and an upper pervious non-woven sheet **24** bonded by a water-dispersible adhesive. This non-woven sheet covers the top of pad **22**, extends down along the sides, and is fastened to the longitudinal edges of film **23** by lines of water-dispersible adhesive **27**. The ends of wrapper **24** and film **23** are pressed together and sealed by a similar adhesive. Disposed near either end of plastic film **23** are patches of pressure sensitive adhesive **25** covered by protective sheets **26**. This pad is used in the same manner as the FIG. **1** pad. When it is disposed of in a toilet, the water dispersible adhesive binding the fibers in the non-woven wrapper and binding the edges and ends of the wrapper to the film dissolves, releasing the absorbent pad components, and permitting them to be disintegrated by the flushing action. Plastic film **23** should, of course, be made thin and flexible enough to collapse and pass through the toilet system conduits without difficulty. If made of polyethylene, it preferably should be less than 1 mil thick.

Preferably, the baffle **23** should be biodegradable or eventually water-soluble. One film of the latter type which may be used is a polyvinyl-alcohol coated on the pad facing side with a thin layer of an insoluble varnish such as linseed oil. Wrapper **24** may also be attached to film **23** by a water-insensitive adhesive, but this, of course, is less desirable.

The water-dispersible adhesive used in the particular embodiments described is a water-soluble polyvinyl alcohol of a type which is about 79–82 percent hydrolyzed and has a viscosity of about 22 cps in a 4 percent water solution at 20° C. It was applied by impregnation of a carded web in an amount of about 10 percent based on the web weight. The carded web comprised 1.5 denier 1 9/16 inches staple length rayon fibers, and the web weighed about 14 grams per square yard.

This web disintegrates readily when dropped in excess water. While it is normally not strong enough to perform satisfactorily with full tab pads or other short tab pads which rely on the wet tensile strength of these tabs for support, the web bonded with water-soluble adhesive does have sufficient strength to retain its fiber binding function, even under the damp conditions encountered in use, when the pad is attached to a suitable undergarment by means of a pressure-sensitive adhesive disposed on the bottom of the napkin as described. This is probably so because the adhesive attachment area is shielded from direct contact with the moisture enabling the web to retain most of its dry strength. It may also retain its integrity so well because shearing type forces are necessary to rupture the sheet rather than direct tensile forces as in a tab supported pad.

In addition to the specific polyvinyl alcohol mentioned above, other cold-water soluble polyvinyl alcohols may be used. For example, polyvinyl alcohols having a percent hydrolysis in the range of about 79 to about 98 are generally cold-water soluble and are suitable for the described use. Viscosities of about 21 to about 28 are preferred. The polyvinyl alcohol may be applied by spraying, impregnating, printing or the like. The amount of polyvinyl alcohol can also vary in the range of about 5 to 15 percent by weight, but should be regulated to provide a suitable softness and hand, as well as strength. Excessive amounts are inclined to become sticky in use, and are thus not as desirable.

While polyvinyl alcohol is preferred as the water-soluble binder, other water-soluble adhesives may be used, including such materials as polyvinyl methylether, glycol cellulose, cellulose glycolate, methyl cellulose and the like. These adhesives may also be modified to make them less water sensitive in the presence of moisture or dampness, the important criteria being that the adhesive should have good dry strength but be sufficiently water-sensitive to lose substantially all of its strength and disperse in excess water.

A carded rayon web was used in the specific examples, but other textile length fibers including both natural and synthetic fibers may be used as long as the binder employed is sufficiently water-sensitive to dissolve and disperse in excess water. While synthetic fiber webs of such construction are dispersible in water, cellulosic fibers are preferred, of course, because they are biodegradable. The usual staple fiber lengths of from about one-half to 3 inches are useful, although the longer lengths tend to break up more slowly and are less desirable. In addition to carding, other known methods of forming non-woven webs of this general type may be used.

The structure of the absorbent pad itself is not critical as long as it is made up of the usual absorbent materials which break up and disintegrate easily in excess water. Among these are wood pulp fluff, cotton fibers, absorbent rayon and regenerated cellulose fibers, multiple plies of cellulose wadding and the like or combinations thereof. Supplemental elements such as compressed pad sections, waxed side strips and the like are also contemplated.

The pressure sensitive adhesive used for attachment may be any one of a number of well-known conventional types and may be in the form of a two-sided tape or may be directly applied to the wrapper. It may be in the form of a single elongate strip or in separate strategically located patches.

What is claimed is:

1. In a tabless sanitary napkin comprising an absorbent pad enclosed in a fluid pervious wrapper and having pressure sensitive attachment means on the bottom side thereof, the improvement in which the pervious wrapper means for said pad comprises a non-woven web of staple length fibers bonded to each other by a water-dispersible adhesive, said non-woven web being further characterized by insufficient wet tensile strength to provide end support for said pad.

2. The napkin of claim **1** in which said wrapper comprises an elongate rectangular sheet enveloping said pad with the edges overlapping on the bottom side thereof and with said overlap being sealed by a water-dispersible adhesive.

3. The napkin of claim **2** in which the ends of said wrapper are sealed by means of a water-dispersible adhesive.

4. The napkin of claim **3** in which said ends are flattened and folded back on themselves to form said sealed end.

5. The napkin of claim 3 in which said ends are pressed together and embossed to form said sealed end.

6. The napkin of claim 1 in which the fluid pervious wrapper covers the top and sides of said pad, a thin fluid impervious film covers the bottom of said pad and the edges and ends of said wrapper are attached to the edges and ends of said film.

7. The napkin of claim 6 in which the edges and ends of said wrapper are sealed to the edges and ends of said film by a water-dispersible adhesive.

* * * * *