United States Patent [19]

Nadeau

[11] **Patent Number: Des. 293,738**

[45] **Date of Patent: ** Jan. 19, 1988**

[54] **CARRYING CASE FOR TOY ARTICLES OR THE LIKE**

[75] Inventor: **Richard P. Nadeau,** Frankfort, N.Y.

[73] Assignee: **Zorcom Enterprises,** Utica, N.Y.

[**] Term: **14 Years**

[21] Appl. No.: **761,029**

[22] Filed: **Jul. 31, 1985**

[52] **U.S. Cl.** **D3/73;** D3/74

[58] **Field of Search** D3/30.1, 36, 72-75, D3/35; 190/118, 119; 206/569; D19/36; D21/189; 434/85

[56] **References Cited**

U.S. PATENT DOCUMENTS

D. 200,881	4/1965	Anderson	D3/73
D. 232,231	7/1974	Langieri	D3/73
D. 279,728	7/1985	Kurihara	D3/73
4,318,471	3/1982	Hutton	D3/73
4,513,974	4/1985	Lin	D3/73

OTHER PUBLICATIONS

Best Products 1982-83, p. 455, Item No. 14.

Primary Examiner—George P. Word
Attorney, Agent, or Firm—James & Franklin

[57] **CLAIM**

The ornamental design for a carrying case for toy articles or the like, substantially as shown and described.

DESCRIPTION

FIG. **1** is a perspective view of a carrying case for toy articles or the like showing my new design;
FIG. **2** is a rear perspective view thereof;
FIG. **3** is a side elevational view thereof;
FIG. **4** is a top plan view thereof;
FIG. **5** is a bottom plan view thereof; and,
FIG. **6** is a perspective view thereof, in the open position.

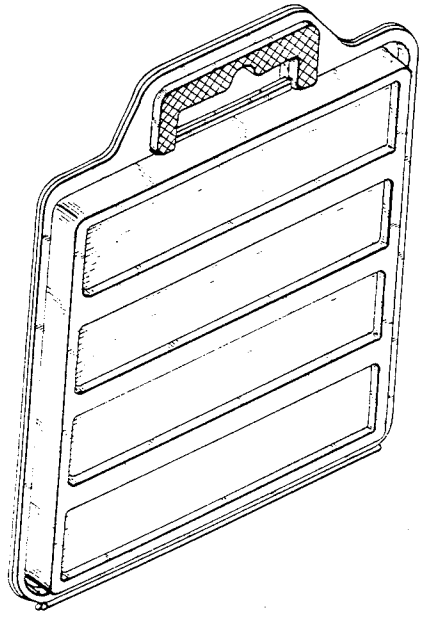

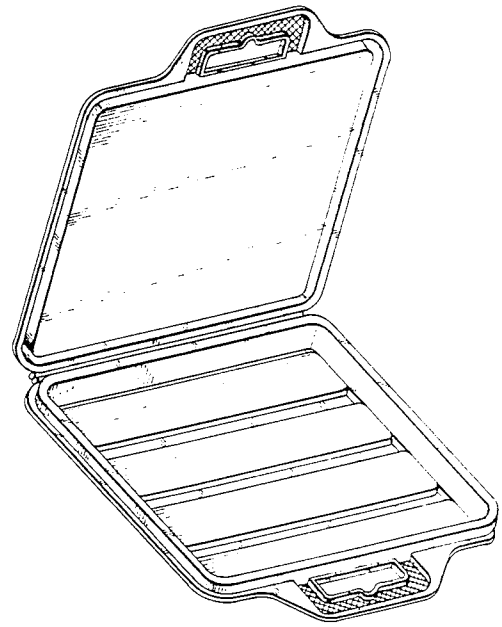

FIG. 1

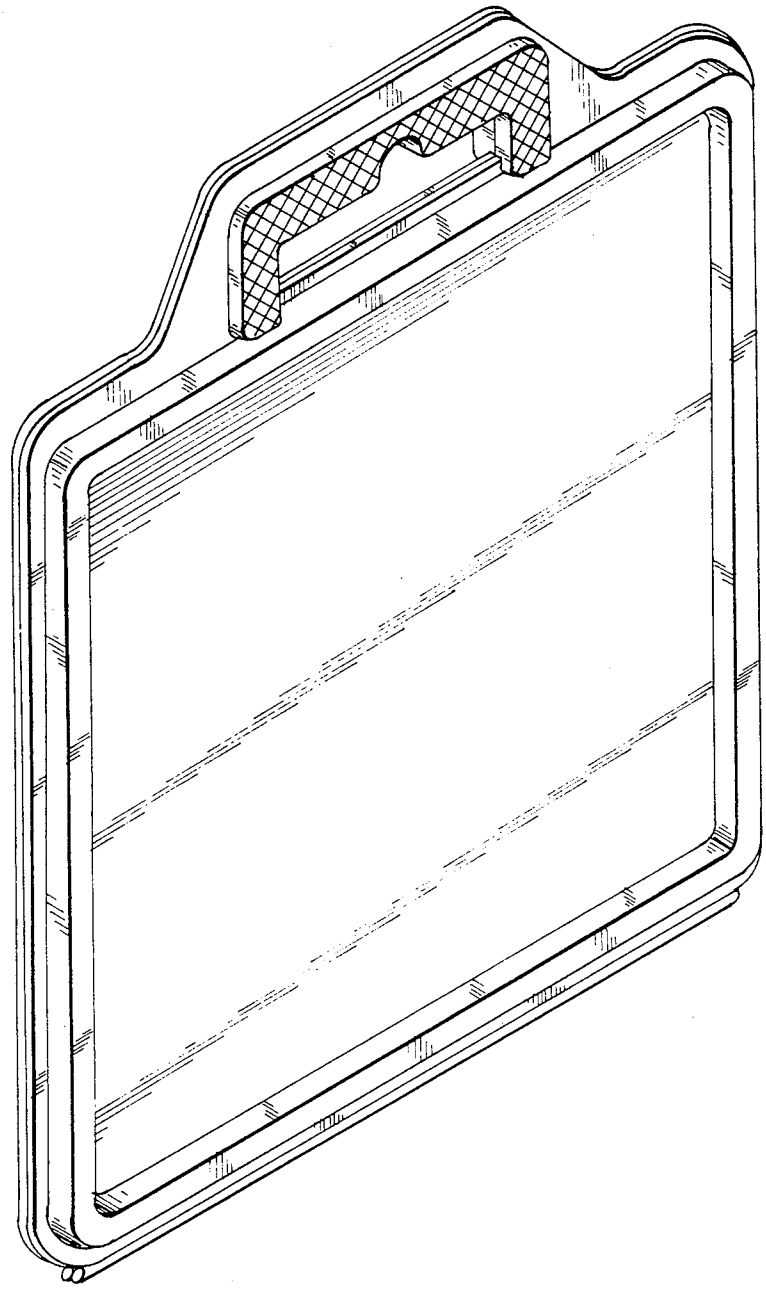

FIG. 2

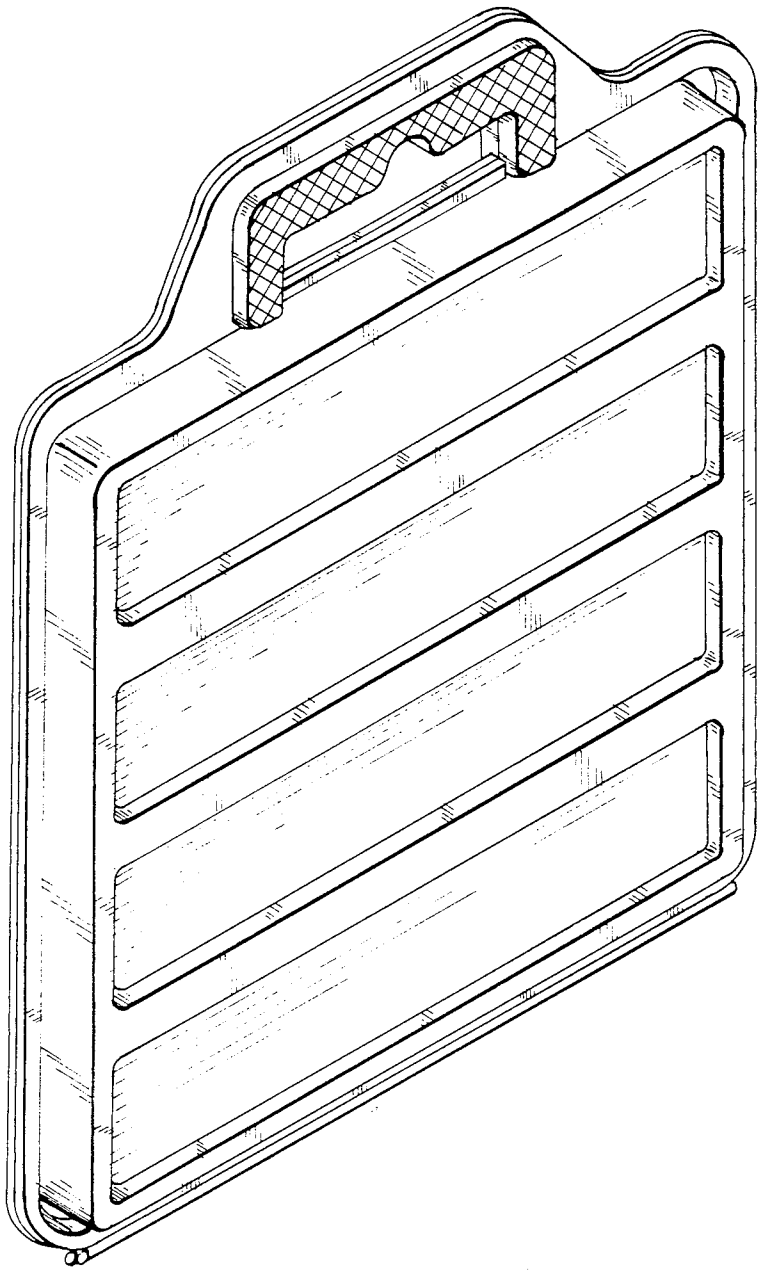

FIG. 3



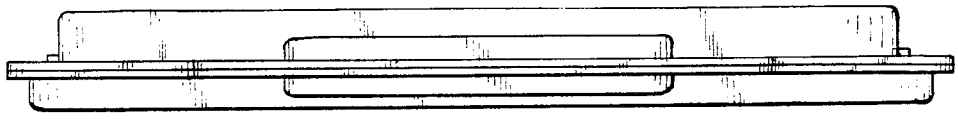

FIG. 4

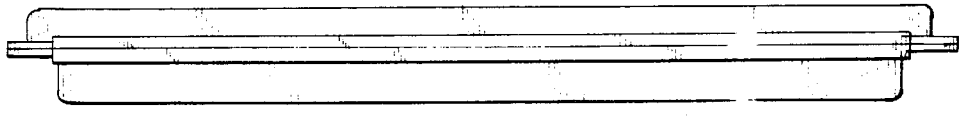

FIG. 5

FIG. 6

