Dec. 7, 1937. W. H. ENGEL 2,101,170

SHEETER

Filed March 25, 1935 3 Sheets-Sheet 1

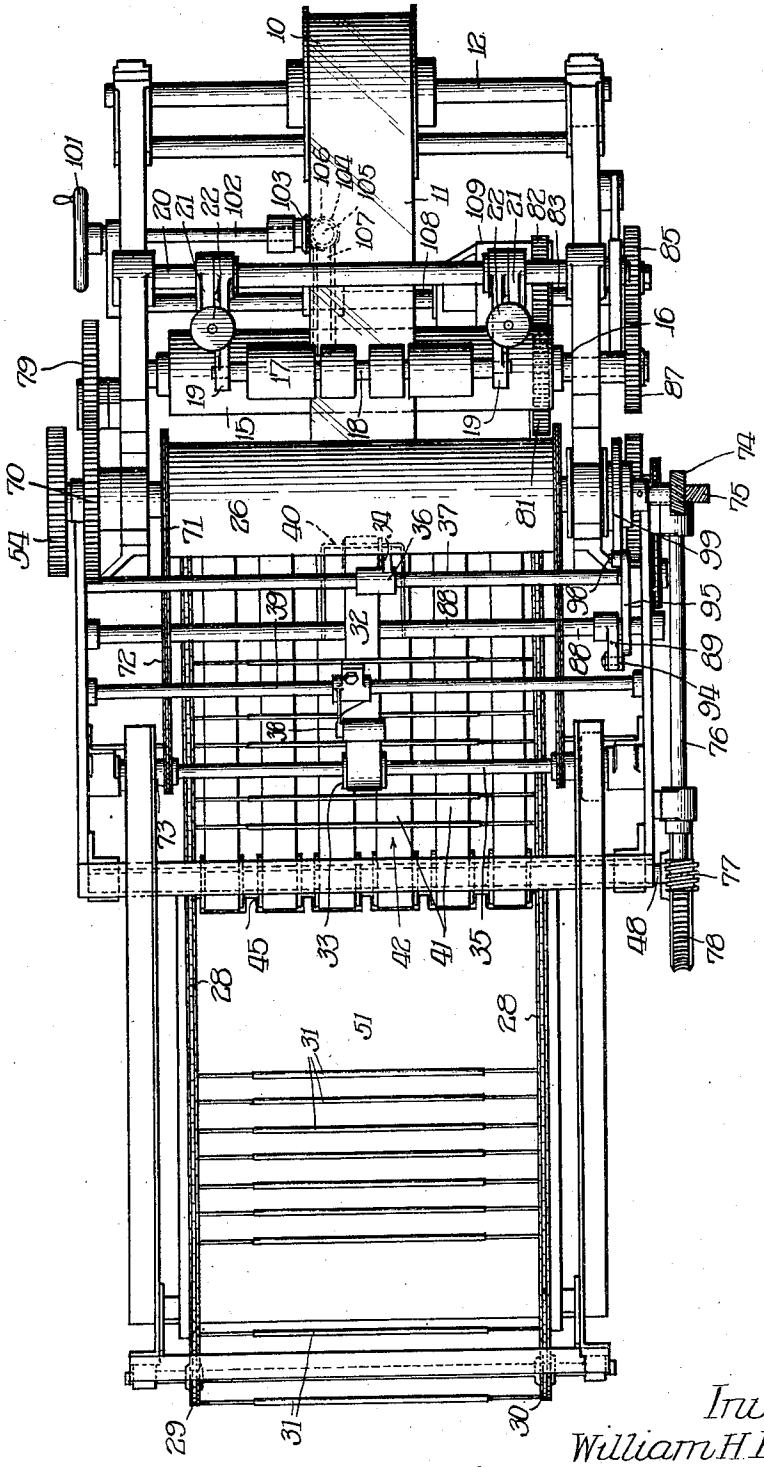

Fig. 1

Inventor:
William H. Engel,
By Cromwell, Frost & Warden attys.

Dec. 7, 1937. W. H. ENGEL 2,101,170

SHEETER

Filed March 25, 1935 3 Sheets-Sheet 2

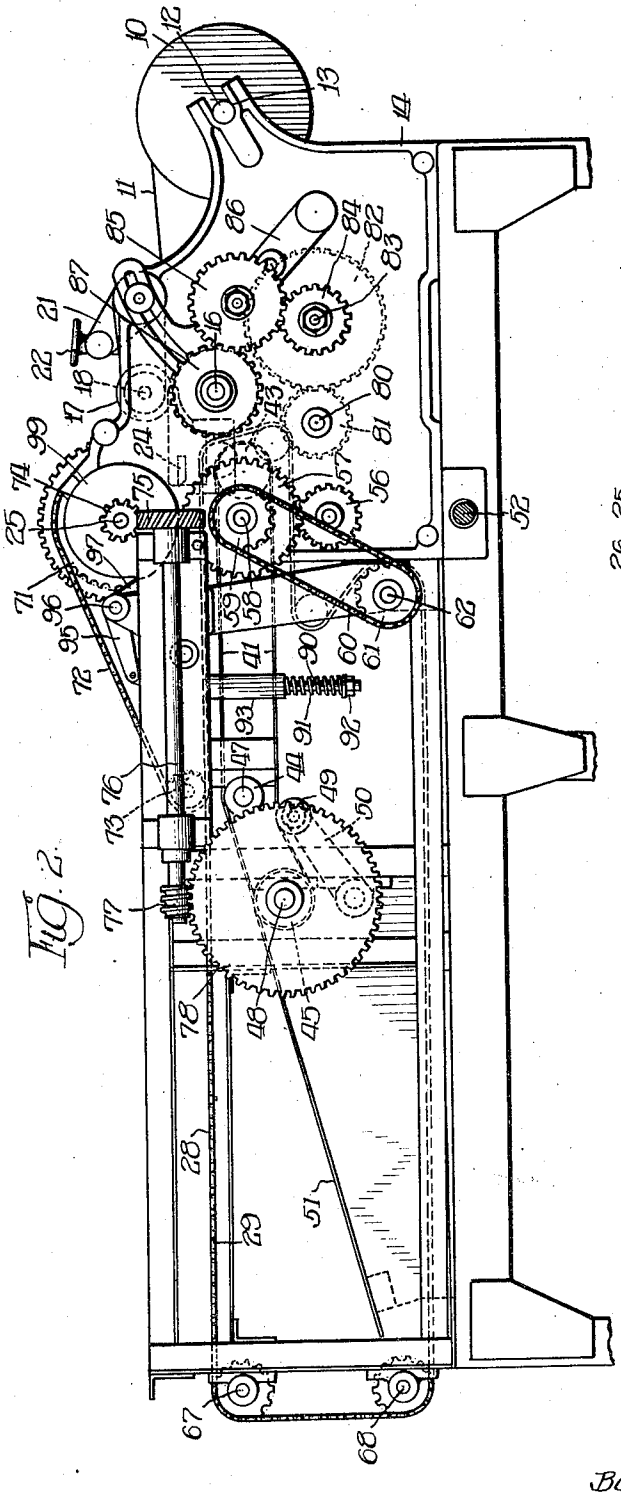

Fig. 2.

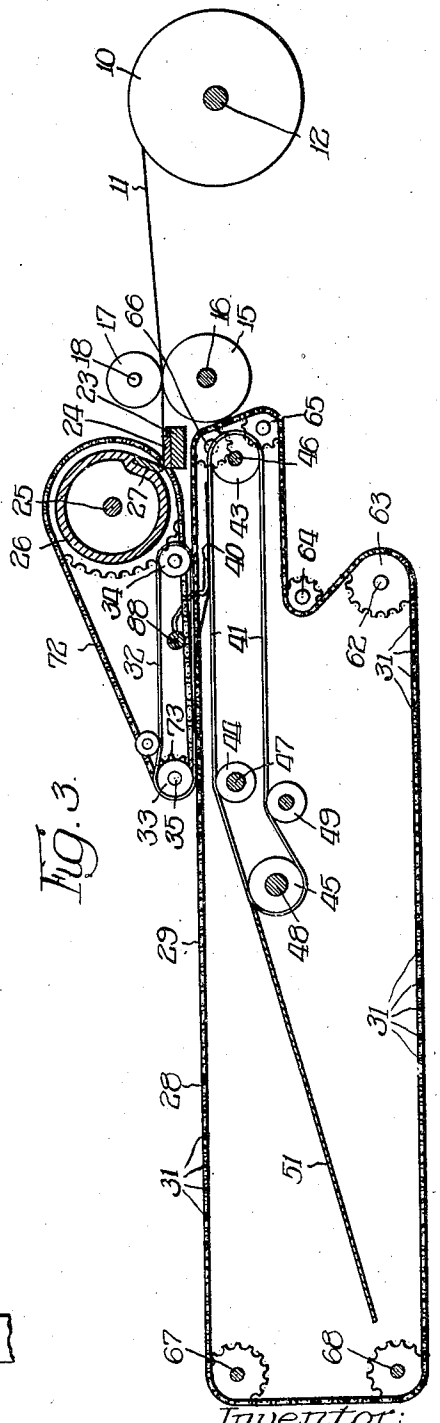

Fig. 3.

Inventor:
William H. Engel,
By Cromwell, Greist & Warden
Attys

Dec. 7, 1937. W. H. ENGEL 2,101,170

SHEETER

Filed March 25, 1935 3 Sheets-Sheet 3

Fig. 4.

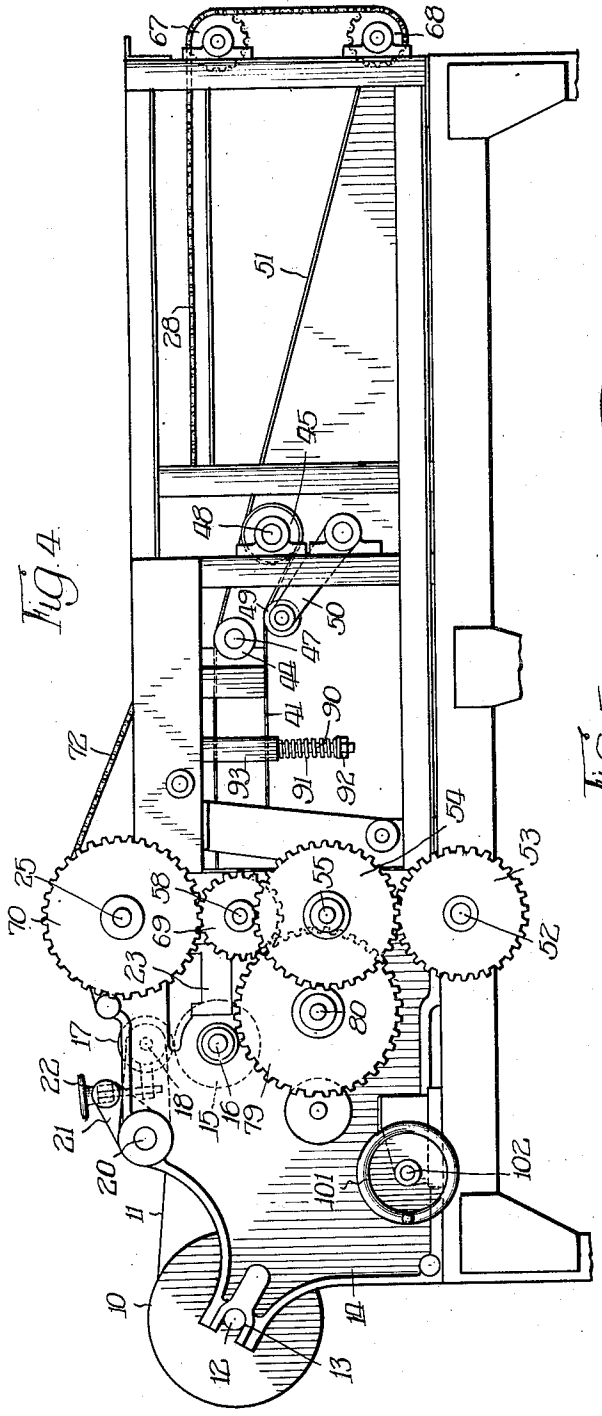

Fig. 5.

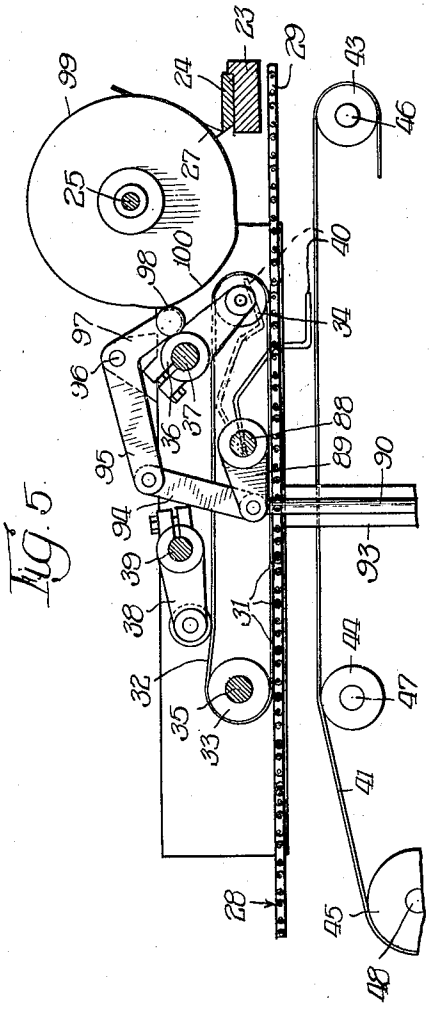

Inventor:
William H. Engel,
By Cromwell, Greist & Warden attys

Patented Dec. 7, 1937 2,101,170

UNITED STATES PATENT OFFICE

2,101,170

SHEETER

William H. Engel, Mount Vernon, Ohio, assignor to Shellmar Products Company, Mount Vernon, Ohio, a corporation of Delaware

Application March 25, 1935, Serial No. 13,007

11 Claims. (Cl. 271—76)

The present invention relates to the cutting of sheets from a continuous web of material, and has particular reference to improvements in mechanism for handling such sheets subsequent to their being severed from a continuous web.

Paper, cellulose materials and the like, customarily are manufactured in roll form. That is, a continuous web is produced and sold to manufacturers of various commodities in roll form. It is necessary to cut the rolled material into individual sheets for use as wrappers and the like. In many cases it is desirable to print the material. When this is done the continuous web is run through a printing machine, and the individual sheets may be cut just after the wrapper has been printed, thereby delivering the wrappers in sheet form, or the printed web may be rerolled and severed into individual sheets thereafter.

A principal object of the present invention is the provision of an improved sheeting machine for conversion of a continuous web of paper, transparent cellulose sheeting and the like, into individual sheets.

An additional object is to provide a machine for the effect of handling individual sheets severed from a roll by a rapidly operating cutting mechanism.

A further object is the provision of a cutting and delivery mechanism for sheets of thin, easily flexed material, such as transparent cellulose sheeting.

These and other objects will be apparent from a consideration of the following specification and by reference to the accompanying drawings, in which—

Fig. 1 is a top view of a device constructed in accordance with my invention;

Fig. 2 is a side view of the device shown in Fig. 1;

Fig. 3 is a somewhat diagrammatic view of the cutting and delivery mechanism of the device shown in Figs. 1 and 2;

Fig. 4 is a side view of the device shown in Fig. 1 taken from the side of the machine opposite to that of Fig. 2; and

Fig. 5 is a somewhat diagrammatic view of the striker bar and operating mechanism therefor.

As shown in the drawings, a roll 10 of a web 11 composed of a thin and easily flexed material, such as transparent cellulose sheeting, is mounted on a shaft 12 journaled at 13 in the main frame structure 14. The web 11 passes from the roll 10 through a set of draw rolls including a relatively large feed roll 15 which is mounted on shaft 16 and an upper contact roll 17. The contact roll 17 is mounted on shaft 18 and the latter is mounted, preferably in roller bearings, in arms 19. These arms are rotatably mounted on a first shaft 20 extending across the frame structure. To provide for adjustment of the contact roll, arms 21 are fixed to shaft 20 and carry adjustment screws 22, the threaded ends of which are engaged with rotatable arms 19. By rotation of the adjustment screws 22 in one direction the arms 19 are raised away from the drive roll, while rotation of the adjustment screws in the opposite direction results in the lowering of the contact roll into engagement with the drive roll. In this manner the pressure of the rolls may be accurately fixed as desired.

After passing between the drive and contact rolls, the web 11 travels over a flat knife-supporting bar 23 upon which is mounted a knife 24. A rotatable shaft 25 is mounted in the frame structure adjacent and slightly in advance of knife 24 and carries a cutting roll 26. Mounted on the cutting roll and in substantially tangential relation thereto is a cutting knife 27. Upon rotation of the cutting roll in a clockwise direction the cutting knife 27, which extends slightly beyond the periphery of the rolled pieces in cutting relation to the stationary knife 24, thereby acts to sever a sheet from the web 11.

Beneath the stationary knife 24 is provided a conveyor, indicated generally at 28, which consists of opposed continuous chains 29 and 30 having spaced series of transverse rods 31 extending therebetween. The conveyor 28 travels in a horizontal direction away from the vicinity of the cutting knife 24. As a sheet protrudes through the space between the cutting knife 24 and the roll 26 prior to the cutting operation, the forward end of the sheet is picked up by the rods 31 and carried upwardly. The severance of the sheets by the cutting knives permits a continuance of this forward motion, but ordinarily before the cutting operation the sheets will be caught between these rods and the upper conveyor tape 32. Conveyor tape 32 passes about rolls 33 and 34. Roll 33 is mounted on shaft 35 and roll 34 is mounted on a swing arm 36 carried on shaft 37. Regulation of the position of swing arm 36 on the shaft regulates the pressure exerted between the conveyor tape 32 and the end of the sheet cut between this conveyor in the rods 31. Tension on the tape 32 may be controlled by regulation of the swing arm 38 carried on shaft 39. The conveyor 28 and the tape 32 are driven at a speed which is in excess of the speed

of the web 11, whereby to produce a tension upon the web.

After severance of the individual wrapper from the web the trailing end of the wrapper is engaged by a striker bar 40 which moves the trailing end of the severed sheet downwardly into engagement with a third conveyor indicated generally at 41. The conveyor 41 consists of a series of continuous tapes 42 mounted about rolls 43, 44 and 45. These rolls are respectively mounted on shafts 46, 47 and 48. The conveyor system 41 is driven at a much slower speed than the conveyor system 28 and as the striker bar 40 engages the trailing end of the severed sheets between the striker bar and the conveyor 41, it will be seen that the severed sheets are retarded in movement sufficiently to be trailed from engagement between the rods 31 and the conveyor 32. To properly adjust the tension of the tapes of the conveyor system 41 there is provided an idler roller 49, the shaft of which is mounted on swing arms 50. Adjacent the forward end of travel of the conveyor system 41 the direction of the tapes is changed from a horizontal path of travel to an inclined path of travel.

As soon as the striker bar 40 strikes down the trailing end of the severed sheets and disengages said sheets from between conveyor systems 28 and 32, it moves back to the position shown in dotted lines in Fig. 5, whereby to receive beneath it the next sheet passing between the cutting knives and the operation described is repeated.

As the conveyor system 41 travels at a very slow speed the action of the striker bar 40 and the conveyor systems 28 and 32 results in formation of a series of overlapped individual sheets, and these sheets are progressed towards the inclined platform 51. If desired, the sheets may be allowed to slide downwardly so that their forward edges will strike a resistant surface and cause the sheets to become substantially superimposed. In other instances, it will be desired to provide a transverse conveyor for conveying the severed and overlapped sheets to a source of disposal. However, the severed sheets may be readily removed from the inclined platform 51 and disposed of as convenient.

Any convenient driving mechanism may be employed for the structure described. In the embodiment shown in the drawings, a main drive shaft 52 is actuated by any suitable means, such as a motor. A gear 53 secured to the drive shaft engages gear 54 on shaft 55. On the opposite end of shaft 55 is provided a gear 56 which drives gear 57 mounted on shaft 58. Shaft 58 carries a sprocket 59 and the latter drives a chain 60 which in turn drives sprocket 61, the latter being mounted on a shaft 62 which carries on each of its ends a sprocket 63 for driving the chains 29 and 30 of the conveyor system 28. This conveyor system includes shafts 64, 65, 66, 67 and 68 bearing sprocket wheels on their opposite ends for guidance of the chains 29 and 30.

Shaft 58 also carries a gear 69 which meshes with and drives gear 70 on shaft 25 of the cutting roll. The cutting roll has a sprocket 71 which drives the conveyor sytem 32 by means of chain 72 and sprocket 73 which is secured to shaft 35 of the roll 33. It will be observed that the sprocket wheel 71 is of substantial diameter and that the sprocket wheel 73 is relatively small in size, whereby the speed of the conveyor 32 is substantially greater than the speed of the web 11. Shaft 25 also carries, on the opposite side of the machine from sprocket 71, a helical gear 74 which drives a helical gear 75 mounted on the longitudinally extending shaft 76. The opposite end of shaft 76 carries a worm 77 which drives gear 78 on shaft 48 of the roll 45. The considerable reduction produced in this drive causes the conveyor system 41 to move at a very slow speed as compared with the speed of the conveyor systems 32 and 28.

Gear 69 also meshes with gear 79 mounted on shaft 80. A second gear 81 on shaft 80 meshes with and drives gear 82 on shaft 83. Gear 84 on shaft 83 drives an idler gear 85 mounted on a single arm 86. Gear 85 drives gear 87 which is attached to shaft 16 of the feed roll 15. By changing the size of gears 84 and 85 it will be seen that the speed of the draw roll with respect to the speed of the other mechanism of the machine may be changed. This permits the use of the machine for cutting sheets of various lengths.

The striker wire 40 is mounted on a transverse shaft 88 and a crank arm 89 also is rigidly fixed to the shaft 88. Pivotally attached to the crank arm 89 is a downwardly extending rod 90 which bears a spring 91 on its ends. The lower end of the spring 91 presses against nut 92 while the upper end of the spring presses against the lower end of housing 93 through which the rod 90 passes. The spring tends to move the rod 90 downwardly and therefore presses the striker bar or wire 40 toward the position shown in dotted lines in Fig. 5. The crank arm 89 also has pivotally attached to it a link 94 which is connected at its upper end to one arm of a bell crank 95, the latter being pivotally mounted at 96 and having its other arm 97 provided with a roller 98. Roller 98 bears against a cam 99 which is carried on and rotates with shaft 25 of the cutting roll. The cam 99 is provided with an outwardly extending portion 100 which engages roller 98 and rotates the arm 95 of the bell crank upwardly, thereby moving the striker wire, through link 94 and arm 89, into the position shown in full lines in Fig. 5. As soon as the hump 100 is rotated out of contact with the roller 98 the latter reverses the movement of the crank arm by reason of the tension produced by spring 91. That is, the roller 98 is maintained in constant contact with the outer surface of the cam by reason of the tension or down pull exerted by the spring 91. It will be understood that the hump 100 on the cam 99 is positioned in such a manner as to cause the striker wire 40 to be depressed at the proper time to engage the trailing end of a severed sheet, the forward end of which is carried by the conveyor systems 28 and 32.

In order that the machine may be employed in the cutting of sheets from rolls of material upon which is printed spaced designs, I have provided a differential mechanism operated by the hand wheel 101. This hand wheel is carried by shaft 102 to the opposite end of which is attached bevel gear 103. Gear 103 meshes with a similar bevel gear 104 on the vertical shaft 105. The upper end of shaft 105 is provided with a worm 106 which engages and drives a worm wheel 107 attached to shaft 108. The shaft 108 is connected to a conventional differential mechanism 109 provided with drive gear 82. Shaft 83 extends from the differential to gear 84. By operation of hand wheel 101 in one direction, this conventional differential drive mechanism acts to speed up the draw rolls with respect to the cutting rolls. Rotation of the hand wheel in the opposite direction will retard the feeding mechanism with re-

spect to the cutting unit. Thereby, the proper relation between the feeding and cutting units may be maintained to sever the wrap at the desired point between adjacent printed designs on the web.

The device has been described with respect to an embodiment in which the printed web in roll form is cut into individual sheets. In operation the roll is mounted in the device and the forward end of the web is passed through the feed rolls and into the cutting unit. Except during the cutting moment a space exists between the stationary cutting knife and the cutting roll which allows free movement of the forward end of the web therethrough. The mechanism is so timed that this advancing in of the web is caught above one of the series of rods **31** on conveyor **28**. These rods and the tape **32** operate at a higher speed than the traveling web and thereby produce a forward tension on the sheet. After the cutting moment, the severed sheet is free to travel forward at an increased speed with the conveyors **28** and **32**, thereby producing a space between the severed sheet and the forward end of the web extending through the cutting unit. The striker mechanism then extends through the space in conveyor **28** between adjacent series of rods **31** and engages the trailing end of the severed sheet sufficiently to cause the severed sheet to be drawn out of its releasable engagement with the conveyors **28** and **32**.

It is preferred that the rods **31** be rotatable and covered with a material such as rubber. The conveyors **28** and **32** may be properly adjusted to exert sufficient frictional engagement on the forward end of the sheet to convey it along at an increased rate of travel but insufficient to prevent ready release of the sheet when the striker mechanism operates.

Where a printed roll having spaced designs is cut into sheet form there often occurs a discrepancy between the speed of the feeding and the cutting rolls, whereby the web is severed along a line in proper position with respect to the printed designs. By proper manipulation of the differential mechanism the cutting unit may be readjusted to sever the web along a proper line between printed designs, and such adjustment is made independently of the operation of the sheet-handling mechanism.

The action of the conveyor systems and the striker wire is such as to permit of operation of the device at high speeds. Even at such speeds the cutting and delivery is highly satisfactory. Many modifications and changes in the structure described herein may be made without departing from the scope of the invention. For instance, the driving mechanism may be changed variously. The rods **31** preferably are made rotatable and may be covered with rubber to provide an advantageous contact with the sheets of material. All of such changes and modifications are intended to be included in the appended claims.

I claim:

1. In a device of the type described having means for advancing a continuous web of material and a cutting unit in the path of travel of said web for severing individual sheets therefrom, the combination of a relatively high speed conveyor system engaging the forward edge of sheets extending through said cutting unit, a relatively slow speed conveyor adjacent and beneath said cutting unit, and a striker operable to press the trailing end of a sheet in said relatively high speed conveyor system against said relatively slow speed conveyor to disengage said sheet from the relatively high speed conveyor.

2. In a device of the type described having means for severing sheets from a traveling web, means acting on the forward end of said sheets for advancing the same at relatively high speed, a relatively slow moving conveyor, and means acting on the trailing end of said sheets for depositing the same on said conveyor.

3. In a device of the type described having means for severing sheets from a traveling web, means acting on the forward end of severed sheets for advancing the same, and means acting on the trailing end of said sheets for causing release of the sheets from said advancing means.

4. In a device of the type described, means acting on the forward end of a sheet for advancing the sheet, and means acting on the trailing end of the sheet for releasing the sheet from said advancing means.

5. In a device of the type described, upper and lower conveyors traveling at a relatively high speed for engaging the forward portion of a sheet therebetween with sufficient friction to progress the sheet, a lower conveyor traveling at a relatively slow speed, and means for pressing the trailing end of said sheet against said relatively slow moving conveyor with sufficient frictional engagement to withdraw the forward end of said sheet from the relatively high speed conveyors.

6. In a device of the type described having means for severing sheets from a traveling web, a continuous conveyor traveling at relatively high speed and being provided with spaced series of transverse bars for engaging the forward portion of severed sheets, an upper continuous conveyor for holding said sheets in releasable frictional engagement with said transverse bars, a lower conveyor traveling at slow speed, and a striker member for striking the trailing end of a sheet carried by said bars downwardly against said slow moving conveyor with sufficient friction to cause said sheet to be withdrawn from said bars.

7. In a device of the type described having means for severing sheets from a traveling web, a conveyor for the severed sheets, and a striker member for striking the trailing portion of severed sheets downwardly onto said conveyor.

8. In a device of the type described having means for severing sheets from a traveling web, conveyor mechanism for delivering said sheets, including continuous driven chains having rotatable transverse rods extending therebetween in spaced series, an upper conveyor for maintaining sheets in releasable frictional engagement with said rods, and means for releasing said sheets from engagement with said rods.

9. In a device of the type described having means for severing sheets from a traveling web, continuous chains having spaced series of rotatable rods extending therebetween, means for driving said chains at a relatively fast speed, an upper continuous driven tape adjacent the path of travel of said rods for maintaining a sheet in releasable frictional engagement with said rods, a lower and slow traveling conveyor, a striker member, resilient means for bracing said striker member toward upraised position, and cam-operated means for causing said striker to strike the trailing end of a sheet engaged with said rods downwardly against said slow moving conveyor to withdraw said sheet from said bars.

10. In a device for handling sheets, a conveyor mechanism, means carried by the conveyor for frictionally engaging the forward portion of

sheets fed thereto, and intermittently operating means for engaging the trailing portions of said sheets with greater friction than said first named engaging means to withdraw said sheets therefrom.

11. In a device for handling sheets, a conveyor mechanism, means carried by said conveyor for engaging the forward portion of sheets fed thereto, a striker member positioned adjacent the path of travel of said conveyor, and means for operating said striker means against the trailing portion of a sheet carried by said engaging means to withdraw said sheet at a predetermined point.

WILLIAM H. ENGEL.