AUSTRALIA

Patents Act 1990

674027

PATENT REQUEST : PATENT OF ADDITION

We, being the person identified below as the Applicant, request the grant of a patent to the person identified below as the Nominated Person, for an invention described in the Australian Patent Application No. 51006/93.

Full application details follow:

[71/70] Applicant/Nominated Person:

Smith & Nephew Richards, Inc.

Address:

1450 Brooks Road, Memphis, Tennessee 38116, United States of America

[54] Invention Title:

Acetabular cup body prosthesis

[72] Name(s) of actual inventor(s):

SCHRYVER, Jeff
SHEA, Jeff
RYAN, Dawn Michelle

[74] Address for service in Australia:

DAVIES COLLISON CAVE, Patent Attorneys, of 1 Little Collins Street, Melbourne, 3000, Victoria, Australia. Attorney Code: DM

BASIC CONVENTION APPLICATION(S) DETAILS:

[31] Application No.	[33] Country	Code	[32] Date
07/938,421	United States of America	US	31 August, 1992

AUSTRALIAN PATENT OFFICE 13

PARENT INVENTION DETAILS:

[61]	Application No.	Patent No.
	10909/92	661293

11 October, 1996

Peter H. Huntsman
A member of the firm of DAVIES COLLISON CAVE
for and on behalf of the applicant

AUSTRALIA

PATENTS ACT 1990

NOTICE OF ENTITLEMENT

We, **Smith & Nephew Richards Inc.**, the applicant/Nominated Person in respect of Application No. 51006/93 state the following:-

The Nominated Person is entitled to the grant of the patent because the Nominated Person derives title to the invention from the inventors by assignment.

The Nominated Person is entitled to claim priority from the application listed in the declaration under Article 8 of the PCT because the Nominated Person is the assignee of the applicants in respect of the application listed in the declaration under Article 8 of the PCT.

DATED this TWENTY NINTH day of MARCH 1995

.....

a member of the firm of
DAVIES COLLISON
CAVE for and on behalf
of the applicant(s)

(DCC ref: 1725864)

AU9351006

(12) PATENT ABRIDGMENT (11) Document No. AU-B-51006/93
(19) AUSTRALIAN PATENT OFFICE (10) Acceptance No. 674027

(54) Title
ACETABULAR CUP BODY PROSTHESIS

International Patent Classification(s)
(51)[5] A61F 002/34

(21) Application No. : 51006/93 (22) Application Date : 31.08.93

(87) PCT Publication Number : WO94/05234

(30) Priority Data

(31) Number	(32) Date	(33) Country
938421	31.08.92	US UNITED STATES OF AMERICA

(43) Publication Date : 29.03.94

(44) Publication Date of Accepted Application : 05.12.96

(61) Related to Addition(s) : 10909/92

(71) Applicant(s)
SMITH & NEPHEW RICHARDS INC.

(72) Inventor(s)
JEFF SCHRYVER; JEFF SHEA; DAWN MICHELLE RYAN

(74) Attorney or Agent
DAVIES COLLISON CAVE , 1 Little Collins Street, MELBOURNE VIC 3000

(56) Prior Art Documents
AU 41305/93 A61F 2/34
US 4770661

(57) Claim

1. An acetabular cup prosthesis, comprising:

a) an acetabular cup body having an inner concave surface, an outer convex surface, and an annular base that defines a base plane;

b) a polymeric cup liner that registers with and affixes to the cup body at the cup body concave surface;

c) wherein the cup body concave surface has polished inner surface means that faces the liner for retarding liner debris generation, and including a polished surface having a roughness of less than eight (8) micro-inches.

OPI DATE 29/03/94 APPLN. ID 51006/93
AOJP DATE 23/06/94 PCT NUMBER PCT/US93/08295

AU9351006

CT)

(51) International Patent Classification 5 :
A61F 2/32

A1

(11) International Publication Number: WO 94/05234

(43) International Publication Date: 17 March 1994 (17.03.94)

(21) International Application Number: PCT/US93/08295

(22) International Filing Date: 31 August 1993 (31.08.93)

(30) Priority data:
07/938,421 31 August 1992 (31.08.92) US

(71) Applicant: SMITH & NEPHEW RICHARDS INC. [US/US]; 1450 Brooks Road, Memphis, TN 38116 (US).

(72) Inventors: SCHRYVER, Jeff ; 28 Summer Grove Road, Cordova, TN 38018 (US). SHEA, Jeff ; 623 South Yates, Memphis, TN 38120 (US). RYAN, Dawn, Michelle ; 4138 Garden Birch Cove, Memphis, TN 38120 (US).

(74) Agent: KRIEGER, Paul, E.; Pravel, Hewitt, Kimball & Krieger, Tenth Floor, 1177 West Loop South, Houston, TX 77027 (US).

(81) Designated States: AU, CA, JP, UZ, European patent (AT, BE, CH, DE, DK, ES, FR, GB, GR, IE, IT, LU, MC, NL, PT, SE).

Published
With international search report.
Before the expiration of the time limit for amending the claims and to be republished in the event of the receipt of amendments.

674027

(54) Title: ACETABULAR CUP BODY PROSTHESIS

(57) Abstract

An improved acetabular cup prosthesis (10) has a cup body (17) with correspondingly shaped inner convex and outer concave surfaces. A polymer liner (15) fits and attaches to the cup (10) at the concave surface. The inner convex surface is highly polished and mirror-like for retarding debris generation with the polymer liner and allowing optical pattern inspection. A plurality of bores (18) can be provided, extending between an inner concave surface and an outer convex surface, wherein the bores (18) can function as drill guides for providing alignment in the drilling of surgical openings after the acetabular cup body (10) is placed in a patient. A plurality of pegs or spikes (52) have proximate end portions (55) that have connection members for forming connections with the bores, and distal end portions (51) that can register into the drilled surgical openings.

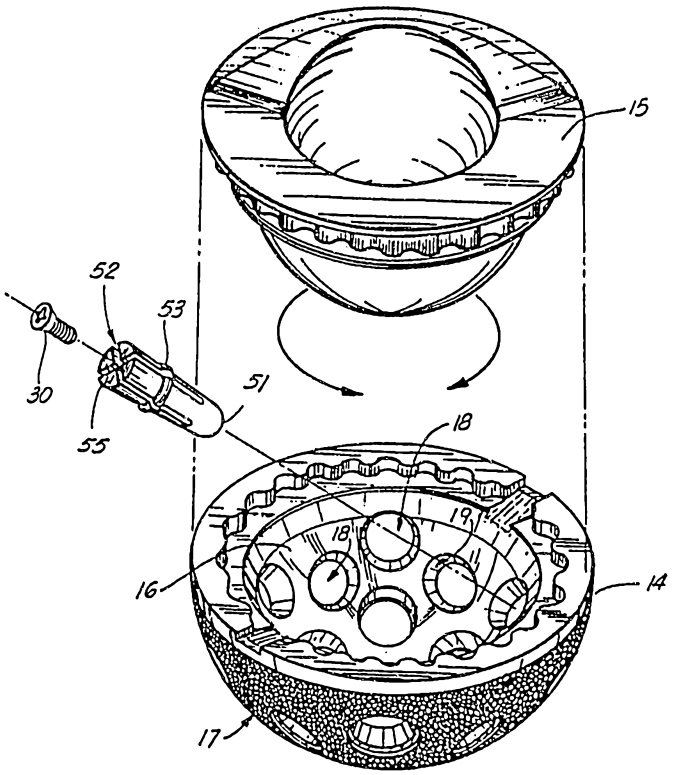

ACETABULAR CUP BODY PROSTHESIS

The present invention relates to acetabular prosthetic devices and more particularly to an improved acetabular prosthesis (and method of surgically implanting), wherein the prosthesis has a cup or shell with an inner concave surface that has a mirror-like polished surface.

Our Australian Patent 661293 describes and claims such an acetabular cup prosthesis. The shiny polished inner, concave surface faces a cup liner (e.g. polymeric) so that relative motion between the liner and shell will generate minimal liner debris. The polished shell concave surface has a roughness of less than sixteen (16) micro inches preferably about eight (8) micro inches. The body or shell can include radially extending bores therethrough that can be used as drill guides by a surgeon after the acetabular cup or shell has been placed in the patient's acetabulum. Holes can be drilled surgically into the underlying bone tissue using

AUSTRALIAN PATENT OFFICE 23

the drill guide openings so that one or more pegs for improved anchoring can be placed into the bores and affixed rigidly to the acetabular cup using an interference or wedge fit. The prosthesis (including cup or shell and rigidly affixed pegs) is thus anchored into the underlying surgical openings.

The present invention is an improvement or development of the acetabular cup prosthesis described and claimed in our Australian Patent 661293.

According to a first aspect of the present invention, there is provided an acetabular cup prosthesis, comprising:

a) an acetabular cup body having an inner concave surface, an outer convex surface, and an annular base that defines a base plane;

b) a polymeric cup liner that registers with and affixes to the cup body at the cup body concave surface;

c) wherein the cup body concave surface has polished inner surface means that faces the liner for retarding liner debris generation, and including a polished surface having a roughness of less than eight (8) micro-inches.

According to a second aspect of the present invention, there is provided an acetabular cup prosthesis, comprising:

a) an acetabular cup body having an inner concave surface and an outer convex surface;

b) a plurality of openings that extend between the inner and outer surfaces along

AUSTRALIAN PATENT OFFICE RB

lines that converge substantially near the center of curvature of the inner concave surface, the openings forming elongated bores surrounded by a bore wall portion of the acetabular cup body;

c) one or more peg members, each being insertable into and registering respectively with one of the openings, each peg member having a first proximate end portion having means thereon for forming a substantially rigid connection with the acetabular cup body at one of the openings and with the bore wall that enables load transfer between the cup body and peg members without substantial rotational or translational movement between the cup body and each peg member, and a second distal end portion adapted to extend into the underlying tissue after the cup body has been implanted in a patient; and

d) wherein the cup body concave surface has polished inner surface means that is adapted to face a cup liner for retarding liner debris generation, and including a polished surface having a roughness of less than eight (8) mirco inches.

Advantageously, the polished inner surface has a roughness of four (4) micro inches or less, preferably between one (1) and four (4) micro inches.

The polished inner concave surface of the cup body is the contact interface between the preferred metallic cup body and the cup polyethylene or other polymer liner. The surface finish has numerous advantages.

First, it provides a low friction and low abrasion surface for distributing the contact forces between the preferred polyethylene liner (UHMWPE) and the cup body or shell. This

reduces the abrasive generation of polyethylene or other polymer debris resulting from motion between the liner and shell.

This motion may come from a variety of mechanisms which include Poisson volumetric distortion of the polyethylene resulting in localized expansion and contraction of the surface of the liner against the shell as a result of loading of the femoral head in the liner, and the micro-motion which occurs from forces from the femoral head pushing the liner within and around the confines of the shell interior.

The mirror finish allows the use of optical non-contact inspection of the interior of the shell surface for checking the geometric correctness of the shell. The use of non-contact optical inspection methods allow complete checking of whole two and three dimensional surfaces at one time. The usual method of optical three-dimensional inspection is to project a regular pattern of light onto the surface which is to be inspected. The resultant two dimensional projection of the scene may be used to give highly accurate total surface measurement. Distortions in the regular pattern indicate distortions in the part surface and indicate deviations from the desired part geometry. This method is ineffective on highly smooth surfaces since the projected light of the regular pattern bounces off the measurement target and no two dimensional mapping is possible. In this device idea the highly smooth surface (which is smooth due to the requirements of paragraph 1 above) is further polished to act as a reflective mirror. This surface mirror then is used as a lens to view a two-dimensional pattern such as a grid drawn on a white sheet of paper or a series of concentric rings. Distortions in the viewed image then are a result of distortions of the lens and hence the surface which is desired to be measured. It is thereby possible to inspect the highly

AUSTRALIAN PATENT OFFICE RB

smooth surface of the acetabular device due to this polishing.

The method of inspection may be both by trained human inspectors and by image analysis performed by capturing the reflected image by a video camera, digitizing the image, and using computer analysis to measure the amount of deviation of the pattern from the allowed surface geometry tolerance.

The advantages of this smooth and polished surface is therefore to provide non-contact, and therefore non-destructive (non-scratching), measurement of the interior of an acetabular device. The inspection methods require a surface which allows a reflective resolution sufficient to provide adequate reflective image quality for analysis. Our current inspection limits require a surface finish of less than eight (8) micro-inches to accomplish this quality of resolution.

In a preferred embodiment, the acetabular cup body of the first aspect of the invention further comprises an array of openings over the cup body and a plurality of peg members removably connectable with the cup body at the openings. Each of the openings may define a smooth welled bore, which may define a drill guide. Each of the openings may thus have a generally cylindrically shaped bore portion, which advantageously includes the generally cylindrical portion and a generally frustro-conical portion.

The plurality of openings advantageously extend between the inner and outer surfaces of the cup body along radial lines that merge substantially at a center of curvature of the inner

AUSTRALIAN PATENT OFFICE 13

concave surface of the cup body.

The peg members can be easily installed from the concave side of the acetabular cup body notwithstanding the fact that the acetabular cup body has already been placed in operative position in the patient's acetabulum. Each peg member is preferably generally cylindrical, but advantageously the plurality of peg members includes a proximal section of larger diameter and a distal section of smaller diameter.

In the preferred embodiment of the first aspect of the invention and in the second aspect of the invention, the acetabular cup body can be placed in its desired position in the acetabulum by the surgeon. The peg members (as described more fully herein) are then added to the cup body and attached to the prosthesis in a rigid fashion. Each peg member protrudes through the acetabular cup body from the concave inner surface and into the underlying bone tissue of the acetabulum to provide a mechanical locking of the acetabular cup (including peg members) into the pelvis. The surgeon can use a pre-drill before placing the peg member or spike wherein the opening or bore in the acetabular cup body functions as a drill guide. Peg members can be selectively placed so that they are not aligned with each other but are at angles to each other which aids in the mechanical stability of the acetabular cup body.

The peg members may feature a taper or wedge lock, barb lock, or knurl lock, to form an interference fit, or compression friction lock, and a rigid connection with the acetabular cup body at the openings. This arrangement assures a rigid connection between each peg

member and the cup body so that the peg member and cup body move together, rather that relative to one another. Relative motion causes possible contact between a peg member and the polymeric cup liner, creating the problem of liner debris generation. The peg members are preferably smooth along the distal portion thereof so that movement of the peg member and cup body as a unit will not disrupt adjacent bone tissue.

The acetabular cup body preferably has the inner concave surface and the outer convex surface of corresponding curvature. The acetabular cup body is preferably of a metallic material at least adjacent the aforementioned openings.

The cup body or shell can be spherical in form, or not spherical in form (such as e.g., an egg-shaped cup or shell).

Embodiments of the present invention will now be described, by way of example only, with reference to the accompanying drawings in which:-

FIGURE 1 is a side sectional view of a first embodiment of the apparatus of the present invention;

FIGURE 2 is a perspective view of the first embodiment of the apparatus of the present invention;

FIGURE 3 is an exploded perspective view of the first embodiment of the apparatus of the present invention;

RB

FIGURES 4 - 4A are fragmentary views of the first embodiment of the apparatus of the present invention;

FIGURES 5A - 5C are bottom, side, and top views of peg portion of the first embodiment of the apparatus of the present invention;

FIGURES 6A - 6C are bottom, side, and top views of another peg as used with the first embodiment of the

AUSTRALIAN PATENT OFFICE RB

apparatus of the present invention;

FIGURES 7A - 7C are bottom, side, and top views of a spike member as used with the first embodiment of the apparatus of the present invention;

FIGURES 8, 9, 10, and 11 are peg members used with the first embodiment of the apparatus of the present invention including respectively thread lock, barb lock, taper lock, and knurl lock embodiments thereof;

FIGURES 12A - 12D are top views of locking pin members used with the taper locking embodiment of the spike;

FIGURE 13 is a perspective fragmentary view of the first embodiment of the apparatus of the present invention illustrating the peg locking screw portion thereof;

FIGURE 14 is a perspective fragmentary view illustrating an interface of the peg locking screw with one of the pegs of FIGURES 5A - 5C;

FIGURE 15 is a partial sectional view illustrating the peg of FIGURE 10;

FIGURE 16 is a perspective view of a second and preferred embodiment of the apparatus of the present invention;

FIGURE 17 is a fragmentary view illustrating a peg member used with the second embodiment of the apparatus of the present invention;

FIGURE 18 is a fragmentary view illustrating the closure member portion of the second embodiment of the apparatus of the present invention; and

FIGURE 19 is a fragmentary sectional view illustrating the second embodiment of the apparatus of the present invention;

FIGURE 20 is a another fragmentary sectional view illustrating the second embodiment of the apparatus of the present invention;

FIGURE 21 is a another fragmentary sectional view illustrating the cup portion of the second embodiment of the apparatus of the present invention;

FIGURE 22 is a fragmentary sectional view of the

second embodiment of the apparatus of the present invention illustrating the cup and cup liner connection;

FIGURE 23 is a schematic diagram of the grid used to inspect the polished surface for distortions;

FIGURE 24 is a second embodiment of a test grid pattern used to inspect the highly polished surface portion of the acetabular cup prosthesis of the present invention;

FIGURE 25 is a schematic diagram of a test grid showing no surface defects; and

FIGURE 26 is schematic diagram showing local defects for a polished surface that has been inspected using the grid.

In Figure 1 there can be seen a sectional view of the first embodiment of the apparatus of the present invention designated generally by the numeral 10. In FIGURE 1, there can be seen a hip prosthesis member 11 mounted in a femur 12 of a patient. The hip prosthesis 11 includes an upper ball portion 13 that registers with the acetabular prosthetic apparatus 10 of the present invention.

The acetabular prosthesis 10 includes a cup or shell prosthesis body 14, preferably of a metallic material with a plastic liner 15 portion. The metallic cup body 14 includes an inner concave surface 16 and an outer convex surface 17. The surfaces 16, 17 are spaced apart, defining the thickness of the cup or shell 14. The cup body 14 provides a three-dimensional surface that is sintered to the outside surface 17 (such as sintered beads). The inner concave surface 16 is then machined after sintering to a polished mirror finish having a surface roughness of less than eight (8) micro-inches. Another type of roughened outer surface 17 could be provided such as plasma sprayed metal, plasma sprayed hydroxyl apatite, or a mechanically textured or roughened surface. The shell or cup body 14 could have an exterior surface optimized for use with bone cement.

A plurality of openings 18 in form of preferably elongated bores extend between the inner concave surface 16 and the outer convex surface 17. These openings are in the

AUSTRALIAN PATENT OFFICE

form of bores having a bore wall 19 as seen in Figure 3. The openings 18 can function as drill guides for the surgeon. Therefore, once the metallic cup body 14 portion of the acetabular cup prosthesis 10 is placed in position in the patient's acetabulum as shown in Figure 1, the surgeon can simply drill through any one of the plurality of bores forming an opening in the underlying bone tissue designated generally be the numeral 20.

When the surgeon places the cup body 14 in the position shown in Figure 1, the plurality of bores 18 can act as a drill guide for the surgeon. The bore 19 walls of each opening 18 define a cylindrically shaped guide for a correspondingly sized drill. These openings allow the surgeon to form surgical openings in the underlying bone tissue 20.

A selected surgically formed opening 18 is then occupied by a peg (and not necessarily each opening 18), such as one of the pegs 25 - 29, as seen in Figures 1 - 3 and 4A. In the preferred embodiment, each of the pegs 25 - 29 extends into the bone tissue at a different angular position with respect to the other pegs to provide a rigid anchor for the cup 14. Pegs 25-29 can be polymer, metal, or resorbable polymer.

Once the pegs 25 - 28 are placed into operative position, a strong connection is formed between the outer surface of each peg 25 - 28 and the walls 19 of each opening or bore 18. In Figures 5A - 5C, 6A - 6C, 7A - 7C, and 8 - 11, various embodiments of the pegs, their respective attachments to the cup body 14 are illustrated.

In Figure 8, peg 25A includes a proximate end portion 31 and a distal end portion 38A and a central longitudinal axis 34. A smaller diameter section 33 connects with a larger diameter section 32 that is covered with an external spiralling thread 39. The thread 39 bites into and interfaces with the cup body 14 at the wall 19 of each opening 18. The opening or bore 18 wall 19 can also be internally threaded to engage the thread 39.

In Figure 9, peg 25B is provided with a proximate end 31, a distal end 38, a smaller diameter section 33, and a larger diameter section 32 that carries a plurality of annular barb rings 40. When the peg 25B is forced into the opening 18, the barbs 40 form a tight fit with the cup body 14 at the wall 19 of each opening 18.

In the embodiment of Figures 10, 11, and 15, pegs 25C, 25D provide a proximate, larger diameter 41 end portion, a smaller generally cylindrical distal end portion 44, and a transitional frustro-conical section 42, and a curved end 43. Similarly, peg 25D has a proximate, larger diameter 45 portion, a curved annular transition section 46, a smaller and generally cylindrical section 47, and a curved end portion 48. The large diameter section 41 and the frustro-conical portion 42 can also be seen in Figure 15 in a partial sectional view. The larger diameter and frustro-conical sections 41, 42 surround an internally threaded bore 68 which accepts set screw 30. The screw 30 is sized to expand the enlarged 41 and frustro-conical 42 sections slightly when the peg 25C is placed in position within one of the bores 18 which would be similar in shape to the outside surface of frustro-conical portion 42 and enlarged portion 41.

When the set screw 30 is fully threaded into the threaded opening 68, so that the external thread 67 of the set screw 30 engages the internal thread 68 of the bore, a taper lock connection or interference fit is formed between the peg 25C and the wall 19 of opening 18. Internal threads 68 in Figure 15 can also be used as an extraction or holding means for placing and removing the peg 25c. Peg 25c would be used then without a screw 30.

The set screw 30 can have different tooled sockets, as shown in Figures 12A - 12D. In Figure 12A, a set screw 30A includes a square tooled socket 63. In Figure 12B, the set screw 30B has a X-shaped slot 64 for receiving a Phillips-type screwdriver, for example. In Figure 12C, the set screw 30C has a single transverse slot 65 and in the

embodiment of Figure 12B, the set screw 30B has an hexagonal tool socket 66. Other tooled sockets could be employed.

In Figures 4 - 4A, the pegs 25C can be shown extending from the convex 17 surface of cup body 14 and into a surgically formed opening 70 which is formed by the drill that penetrates the opening 18. In such a situation, the surgeon simply uses the opening 18 as a drill guide for a similarly shaped drill when forming surgical opening 70.

In Figures 5A - 5C, an alternate construction of the peg is illustrated, designated generally by the numeral 50A. Peg 50A includes a rounded or hemispherical distal end portion 51 and a proximate end portion 52 that includes a pair of longitudinally extending slots 49, forming four peg sections 55.

In the embodiments of Figures 6A - 6C, the peg 50B provides a hemispherical distal tip 51 and a single longitudinally extending transverse slot 49 forming two peg sections 55. Enlarged annular shoulder 53 and smaller diameter recess 54 are also provided in each of the embodiments of Figures 5A-5C and 6A - 6C.

In the embodiment of Figures 7A - 7C, a spike-shaped peg 56 is provided having a pointed tip portion 57, and a plurality of beveled surfaces 58 that connect with a cylindrical peg body portion that includes an enlarged annular section 60 and a smaller diameter constricted section 59. The proximate 61 end portion of the peg includes a longitudinally extending Y-shaped slot 62, as seen in Figures 7B and 7C.

Figures 16-22 illustrate a second and preferred embodiment of the apparatus of the present invention designated generally by the numeral 70. Acetabular cup apparatus 70 includes a cup body 71 to which can be removably affixed a plastic cup liner 72 made of polyethylene for example. Liner 72 has an inner concave surface 73 and an external convex surface 74. Liner 72 is in the form of a hemispherical member having an annular

base 75 with a plurality of curved members extending around the periphery of liner 72 at base 75 and which interface with a similarly shaped circumferentially recess formed on cup body 71 to prevent rotation of liner 72 with respect to body 71. The cup body 71 is preferably metallic having an annular base 76 that defines a plane. The cup body 71 has an inner concave surface 77 and an external convex surface 78. The cup body 71 concave surface 77 is a shiny polished surface that faces the convex surface 74 of polymeric liner 72. The polished concave surface 77 has a roughness of less than eight (8) micro-inches. Advantageously, the polished inner surface has a roughness of four (4) micro inches or less, preferably between one (1) and four (4) micro inches. Such a highly polished surface 77 appears mirror-like. The polished concave surface 77 inhibits polymer liner debris generation.

External surface 78 can be covered with a plurality of small metallic beads or the like forming a bone ingrowth surface 79. The apex 80 of cup body 71 has a through opening 81 that has an internal thread 82 for attachment thereto of a tool for inserting and/or removing the cup body 71 from its position in the acetabular bone tissue of a patient.

A plurality of four openings 84, 85, 86 and 87 are provided preferably in one quadrant 88 of cup body 71. Each opening 84-87 has an internal opening configuration that includes a larger diameter generally cylindrically shaped opening portion 91 and a smaller diameter opening portion 92 (Figure 20). The larger and smaller diameter sections 91, 92 are interfaced by an annular shoulder 93. The smaller diameter section 92 can be tapered from a point of maximum diameter adjacent annular shoulder 93 to a point of minimal diameter adjacent the annular shoulder 89. A second larger diameter cylindrical section 90 meets outer edge 94 of each opening 84-87.

Pegs 95 can be selectively fitted into any one of the openings 84-87 during use. Each peg 95 has a tapered section 96 that includes a larger diameter circular base 97 defining a proximate end portion of peg 95. Distal end

RB

portion 98 of peg 95 is generally cylindrical and smooth, and includes a curved or hemispherical smooth tip 99.

In Figure 20 force arrows are used to demonstrate that the above-described connection between each peg 95 and the cup body 71 is a substantially rigid connection that produces load transfer between each peg member and the cup body of tension loads, compression loads, axial torsion loads, and bending moment loading. Thus, the peg 95 does not rotate nor back out with respect to the opening 85-87.

The force arrow 117 is an angled force having both a bending force component (Fb) designated as 118 and a compression force component (Fc) designated as 119. The force arrows 120 and 124 show shear forces at the interface between peg 95 and cup body 71 at a selected opening 84 - 87. The force arrows 121A,B are force arrows that are resisting the shear forces and the force arrows 122A,B are resisting bending forces.

A closure member 100 is shown in Figures 18-19 and includes a larger section 101 and a smaller diameter section 102. Annular shoulder 103 forms an interface between the larger 101 and smaller 102 diameter sections. Closure member 101 has an enlarged circular base 104 defining its proximate end portion during use and a smaller circular flat distal end 105.

The larger diameter section 101 of closure member 100 can have a beveled annular wall 106 for forming a wedge type fit with the larger diameter section 91 of a particular selected opening 84-87. In this manner, the closure member 100 can be placed in any one of the selected openings 84-87 and pressed into the selected opening 84-87 by the user even after the cup body 71 has been placed into operative position. The user simply presses the closure member 100 into one of the selected openings 84-87 by accessing the cup body 71 from the concave 77 side.

The surgeon can close any one of the selected openings 84-87 using the closure member 100 after the cup body 71

has been placed in the desired operative position and anchored into position using one or more of the pegs 95. The closure member 100 may be placed in the shell 71 before implantation, such as during manufacturing, and then selectively removed by the surgeon before use of the shell 71. Each closure member 100 occupies a position in its selected opening 84-87 and between the convex 78 and concave 77 surfaces of shell or cup body 71.

Each of the openings 84-87 has a generally cylindrical smaller diameter section 92 that can act as a drill guide for the surgeon so that drilled openings can be made into the underlying bone tissue after the acetabular cup body 71 has been placed into position. This allows one or more pegs to be placed into one or more of the selected openings 84-87. Any of the selected openings 84-87 that are not selected can be plugged using the closure member 100. This prevents the flow of the polyethylene liner into any of the openings 84-87 that are not occupied by a peg 95. The closure member 100 friction fits into the above-mentioned larger diameter portion 91 of the openings 84-87.

In Figure 22, the connection between cup 71 and liner 72 is illustrated with greater detail. Liner 72 can be rotated as shown by arrows 107 in Figure 16 until the raised portion 75A of base 75 is in a selected position. The liner 70 is then fitted to the cup 71 by engaging the annular recess 116 of the cup 71 with the annular corrugated shoulder 108 of the liner 72. Shoulder 108 has an inclined annular shoulder that forms an acute angle of between about eighty and eighty five degrees with the flat upper surface 111 of annular base 75 of liner 72.

The surface 111 is flat so as to register with the surface of base 76 of cup 71. The numeral 112 in Figure 22 designates the angle between surface 111 and inclined annular wall 109. A recess 116 has a corresponding shape and size to the annular corrugated shoulder 108. The angle 113 formed between inner inclined annular surface 114 and annular surface 115 is the same angular measure as angle

112.

This configuration of annular shoulder 108 and recess 116 provides a snap or interference fit between the liner shoulder 108 and the cup 71 at recess 116 which helps secure the liner 72 to the cup 71 during use.

Figures 23-26 illustrate grid charts 200, 205 that can be drawn on a white sheet of paper for example and used to inspect the highly polished inner concave surface 16 of acetabular cup body 14 for defects. In Figure 23, a grid 200 is in the form of a plurality of concentric rings 201, 202, 203, etc. A central opening 204 allows the user to visually inspect the inside surface 16 of the cup body 14 when the flat grid 200 is placed on top of the cup body 14 with the print of chart 200 facing the mirror like polished concave surface 16. In this fashion, the user simply views the lined pattern of the concentric rings 201-203 of grid chart 200 as reflected off the mirror surface of the inside, concave surface 16 of the cup body 14.

In Figure 24, a generally rectangularly shaped test grid 205 is shown. In Figure 25, a reflective pattern for the test grid 205 is shown as pattern 206, showing no defects. In Figure 26, another test grid pattern reflection 207 is shown that notes two local defects 208, 209.

Figure 23 illustrates a method of inspection that may be by trained human inspectors, simply looking through the central opening 204. When such human inspection is employed, the inspector simply looks through the opening 204 when the grid chart 200, 205 is placed against the concave 16 side of acetabular cup body 14.

Another method of inspection may be by image analysis performed by capturing the reflected image with a video camera, digitizing the image and using computer analysis to measure the amount of deviation of the pattern from the allowed surface geometry tolerance. Thus, the surface 16 defines a mirror that is used as a lens to view a two dimensional pattern such as the grid patterns 200, 205

drawn for example on a white sheet of paper. Distortions in the viewed image are then a result of distortions of the lens surface 16 and hence the surface which is desired to be measured.

The following Table 1 lists part numbers and corresponding par descriptions as used herein and in the drawings:

TABLE 1 - PARTS LIST

PART NUMBER	PART DESCRIPTION
10	acetabular cup apparatus
11	hip prosthesis member
12	femur
13	ball portion
14	cup body
15	plastic liner
16	inner concave surface
17	outer convex surface
18	openings
19	bore wall
20	bone tissue
25-29	pegs
25A-D	pegs
30	set screw
31	proximate end
32	larger diameter section
33	smaller diameter section
34	longitudinal axis
38	distal end of peg 25B
38A	distal end of peg 25A
39	thread
40	annular barb rings
41	larger diameter end
42	frustro-conical section
43	curved end
44	distal end portion
45	larger diameter end
46	transition section

47	smaller diameter section
48	curved portion
49	slot
50A	peg
51	hemispherical end
52	proximate end
53	annular shoulder
54	annular recess
55	peg sections
56	peg
57	pointed tip
58	beveled surface
59	smaller diameter section
60	annular shoulder
61	proximate end
62	slot
70	acetabular cup apparatus
71	cup body
72	cup liner
73	concave surface
74	convex surface
75	annular base
75A	raised portion
76	annular base
77	concave surface
78	convex surface
79	bone ingrowth surface
80	apex
81	opening
82	threaded portion
84	opening
85	opening
86	opening
87	opening
88	quadrant
89	shoulder
90	larger diameter cylindrical section

91	larger diameter cylindrical section
92	smaller diameter section
93	annular shoulder
94	annular edge
95	peg
96	tapered section
97	base
98	distal end of peg
99	hemispherical tip
100	closure member
101	larger diameter section
102	smaller diameter section
103	annular shoulder
104	larger base
105	distal end of closure member
106	beveled annular wall
107	curved arrow
108	annular corrugated shoulder
109	angled annular sidewall
110	upper flat surface
111	upper surface of annular base
112	angle
113	angle
114	inner inclined annular surface
115	annular surface
116	annular recess
117	force arrow
118	force component, bending
119	force component, compression
120	force arrow, shear
121A,B	force arrows
122A,B	force arrows
123	force arrows
124	force arrow, shear
125	force arrows, torsion
200	circular grid pattern chart

201	concentric ring
202	concentric ring
203	concentric ring
204	central opening
205	rectangular grid pattern chart
206	reflective pattern - test grid
207	reflective pattern - test grid
208	defect
209	defect

Because many varying and different embodiments may be made within the scope of the inventive concept herein taught, and because many modifications may be made in the embodiments herein detailed in accordance with the descriptive requirement of the law, it is to be understood that the details herein are to be interpreted as illustrative and not in a limiting sense.

~~What is claimed as invention is:~~

AUSTRALIAN 3 PATENT OFFICE

THE CLAIMS DEFINING THE INVENTION ARE AS FOLLOWS:

1. An acetabular cup prosthesis, comprising:

a) an acetabular cup body having an inner concave surface, an outer convex surface, and an annular base that defines a base plane;

b) a polymeric cup liner that registers with and affixes to the cup body at the cup body concave surface;

c) wherein the cup body concave surface has polished inner surface means that faces the liner for retarding liner debris generation, and including a polished surface having a roughness of less than eight (8) micro-inches.

2. The acetabular cup prosthesis of Claim 1 further comprising an array of openings over the cup body and a plurality of peg members removably connectable with the cup body at the openings.

3. The acetabular cup prosthesis of Claim 2 wherein each of the openings defines a smooth walled bore.

4. The acetabular cup prosthesis of Claim 3 wherein the bore defines a drill guide.

5. The acetabular cup prosthesis of Claim 1, wherein the cup body has inner and outer concave and convex surfaces that are of corresponding curvature.

6. The acetabular cup prosthesis of Claim 2, wherein each of the openings has a generally cylindrically shaped bore portion.

7. The acetabular cup prosthesis of Claim 6, wherein each of the openings includes the generally cylindrical portion and a generally frustro-conical portion.

8. The acetabular cup prosthesis of Claim 2, wherein the plurality of peg members are

AUSTRALIAN PATENT OFFICE KB

each generally cylindrically shaped in configuration.

9. The acetabular cup prosthesis of Claim 2, wherein each of the plurality of peg members includes a proximal section of larger diameter and a distal section of smaller diameter.

10. The acetabular cup prosthesis of Claim 2, wherein the acetabular cup body is of a metallic material adjacent the openings.

11. An acetabular cup prosthesis, comprising:

a) an acetabular cup body having an inner concave surface and an outer convex surface;

b) a plurality of openings that extend between the inner and outer surfaces along lines that converge substantially near the center of curvature of the inner concave surface, the openings forming elongated bores surrounded by a bore wall portion of the acetabular cup body;

c) one or more peg members, each being insertable into and registering respectively with one of the openings, each peg member having a first proximate end portion having means thereon for forming a substantially rigid connection with the acetabular cup body at one of the openings and with the bore wall that enables load transfer between the cup body and peg members without substantial rotational or translational movement between the cup body and each peg member, and a second distal end portion adapted to extend into the underlying tissue after the cup body has been implanted in a patient; and

d) wherein the cup body concave surface has polished inner surface means that is adapted to face a cup liner for retarding liner debris generation, and including a polished surface having a roughness of less than eight (8) mirco inches.

12. The acetabular cup prosthesis of any preceding claim, wherein the polished surface is a polished mirror surface.

AUSTRALIAN PATENT OFFICE RB

13. The acetabular cup prosthesis of any preceding claim, further comprising grid means for inspecting the polished inner surface for defects.

14. The acetabular cup prosthesis of Claim 13, wherein the grid means is a grid comprised of a plurality of concentric rings.

15. The acetabular cup prosthesis of claim 13 or claim 14 wherein the polished inner surface defines a lens to view the grid means.

16. The acetabular cup prosthesis of any preceding claim, wherein the polished inner surface has a roughness of four (4) micro inches or less.

17. The acetabular cup prosthesis of claim 16, wherein the polished inner surface has a roughness of between one (1) and four (4) micro inches.

18. The acetabular cup prosthesis of claim 11 or any claim dependent therefrom which includes a polymeric cup liner that registers with the cup body at the inner concave surface.

19. The acetabular cup prosthesis of any one of claims 1 to 10 and 18 wherein the polymeric cup liner is of polyethylene.

DATED this 11th day of October, 1996.

SMITH & NEPHEW RICHARDS, INC.
By its Patent Attorneys
DAVIES COLLISON CAVE



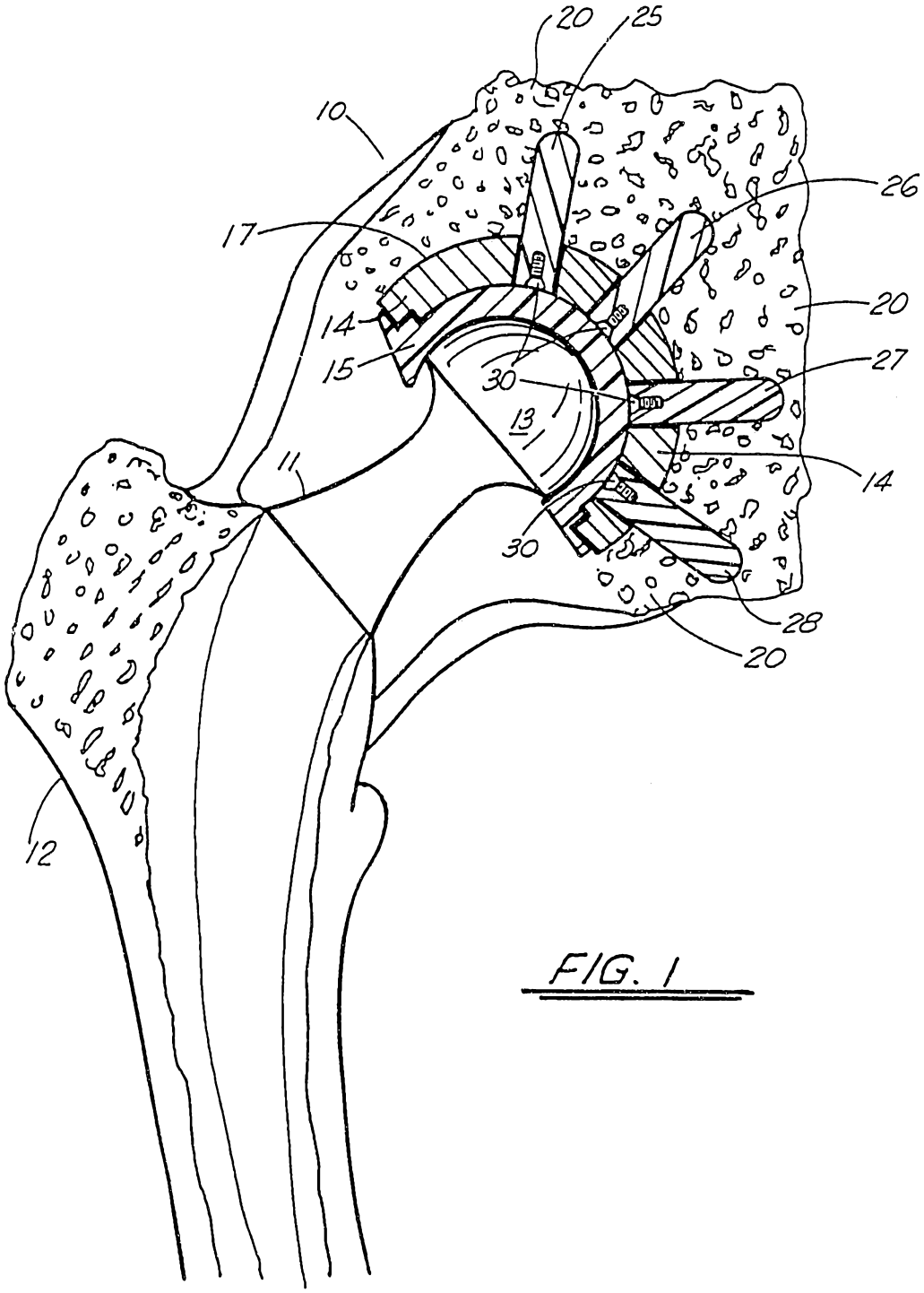

FIG. 1

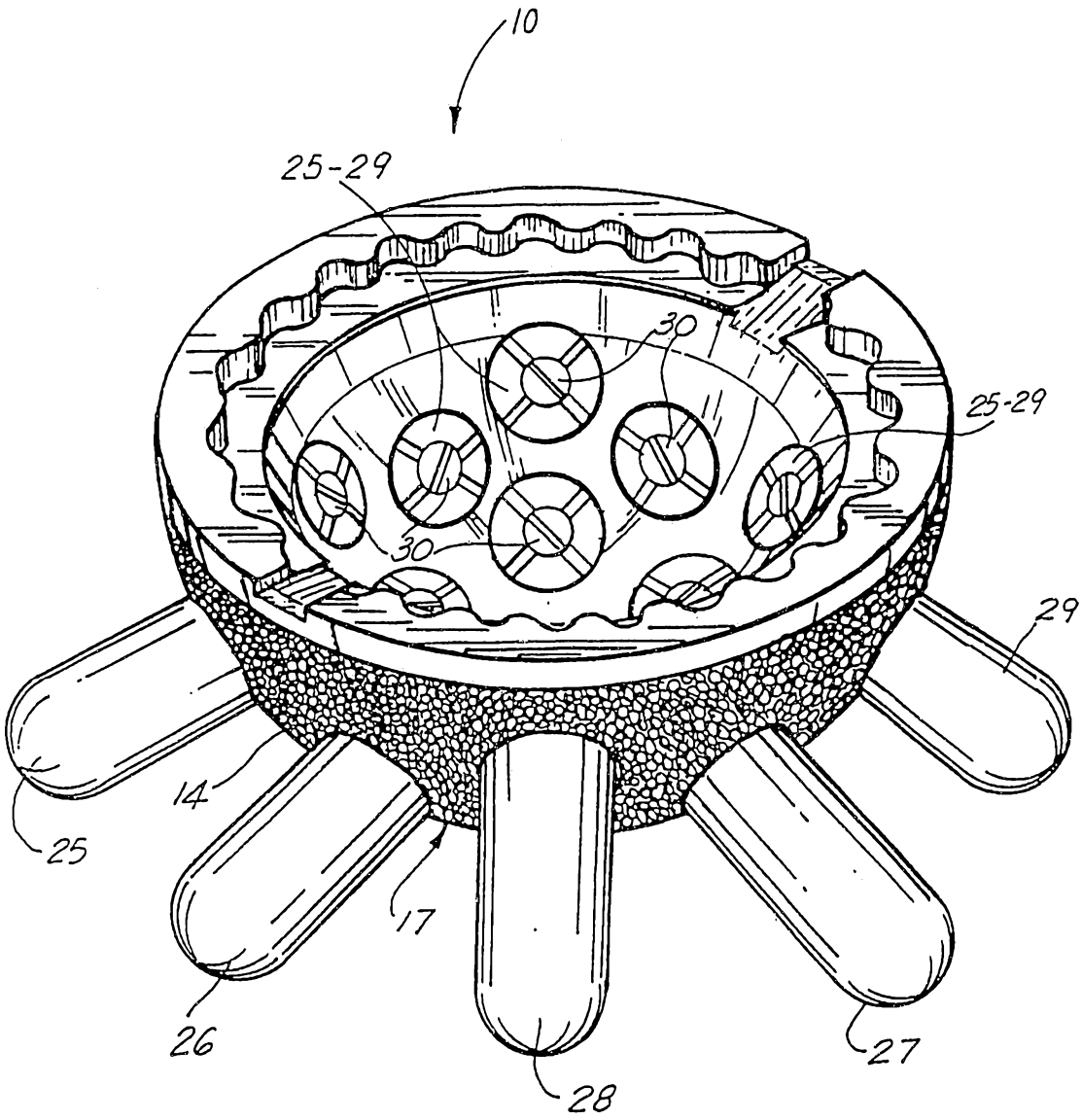

FIG. 2

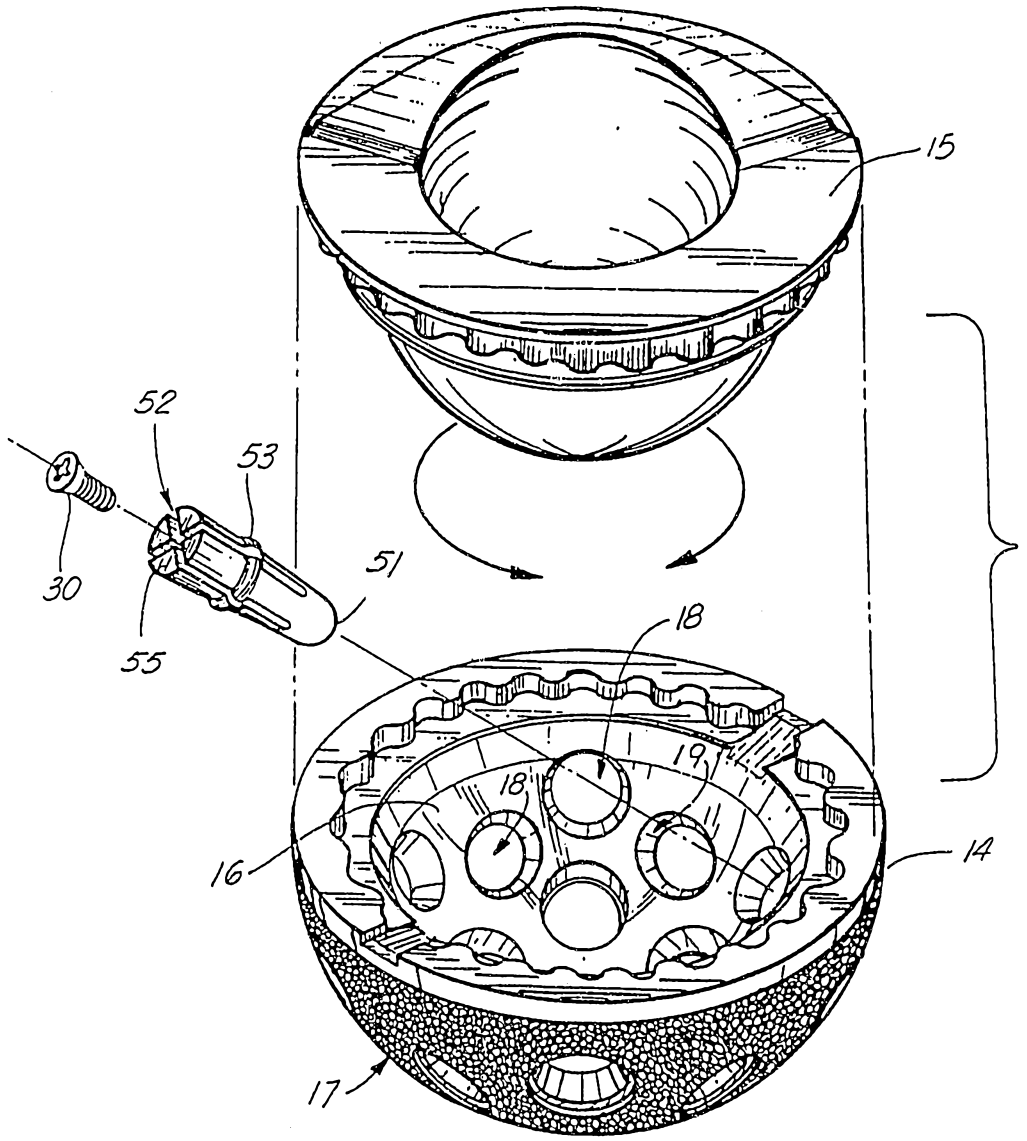

FIG. 3

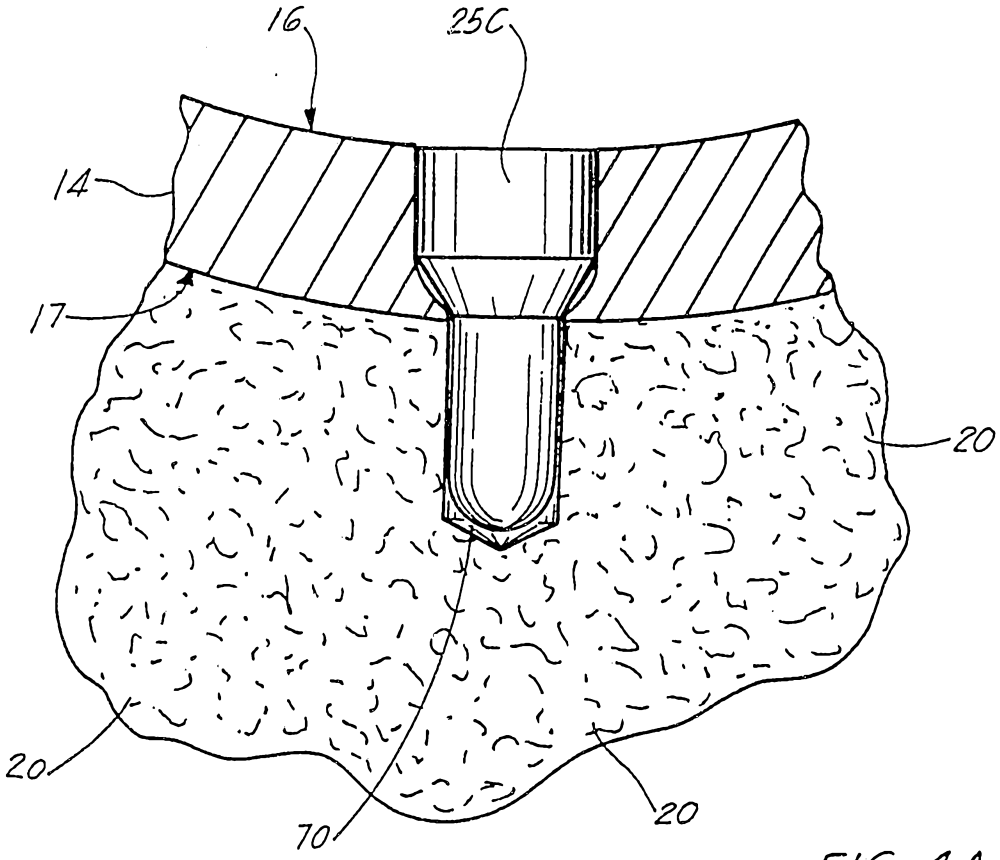

FIG. 4A

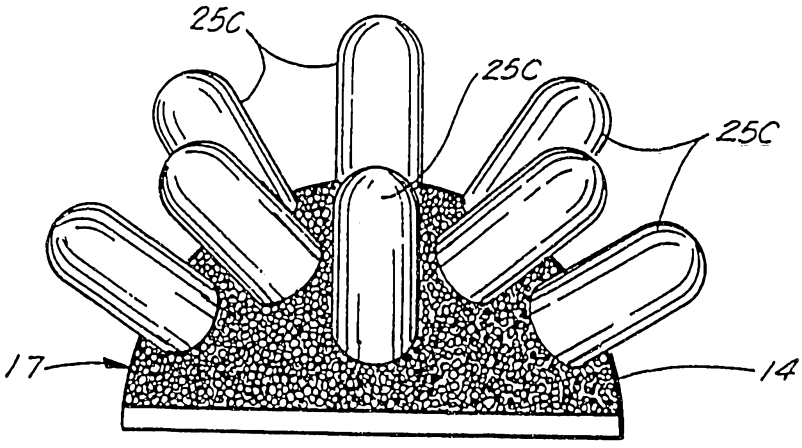

FIG. 4

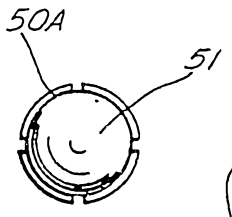

FIG. 5A

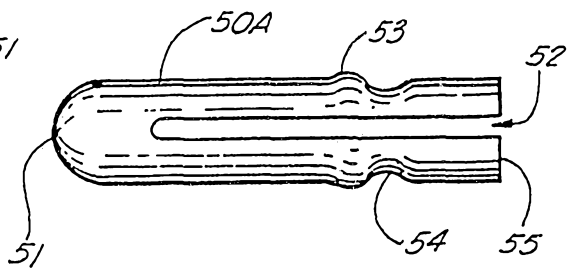

FIG. 5B

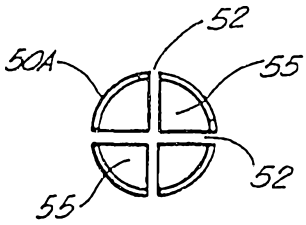

FIG. 5C

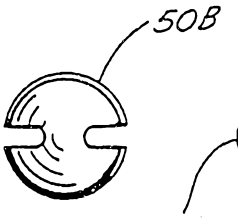

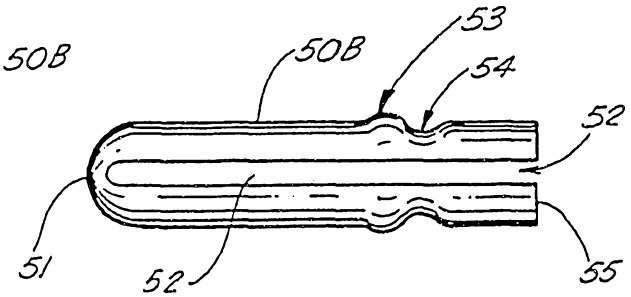

FIG. 6A FIG. 6B

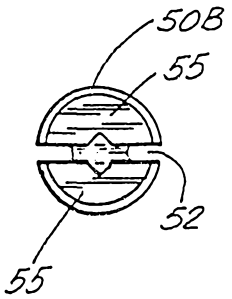

FIG. 6C

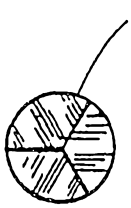

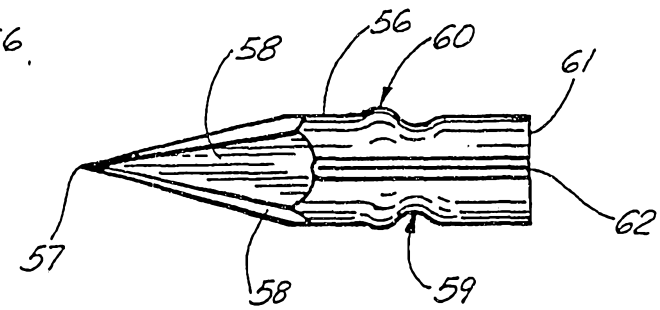

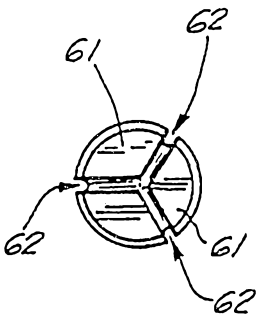

FIG. 7A FIG. 7B FIG. 7C

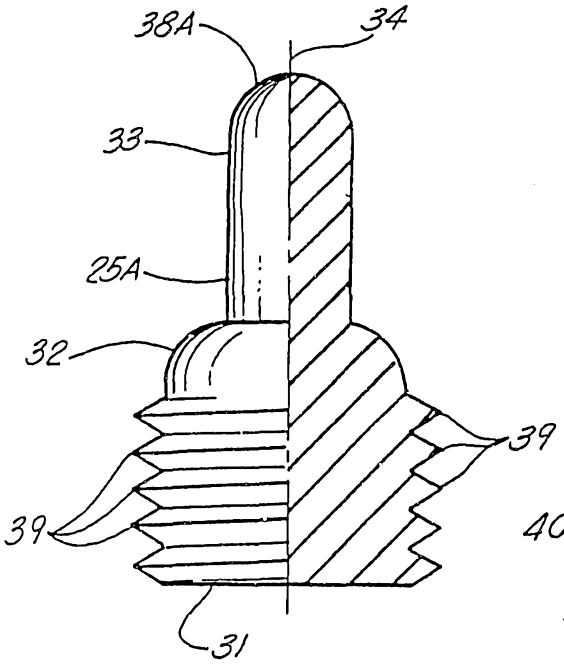

FIG. 8

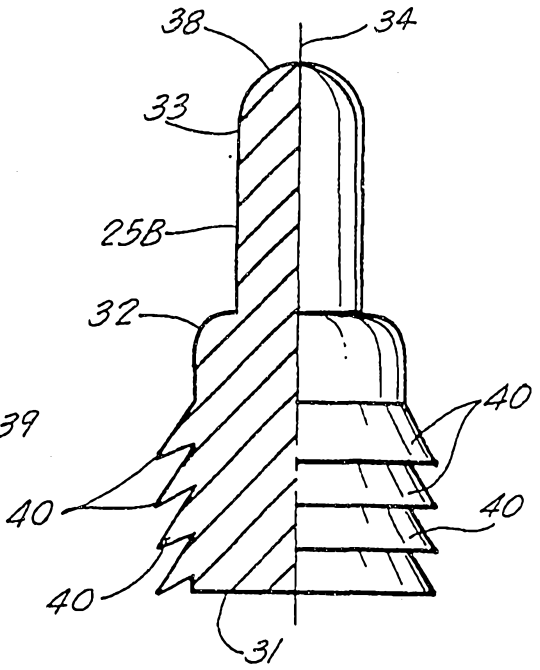

FIG. 9

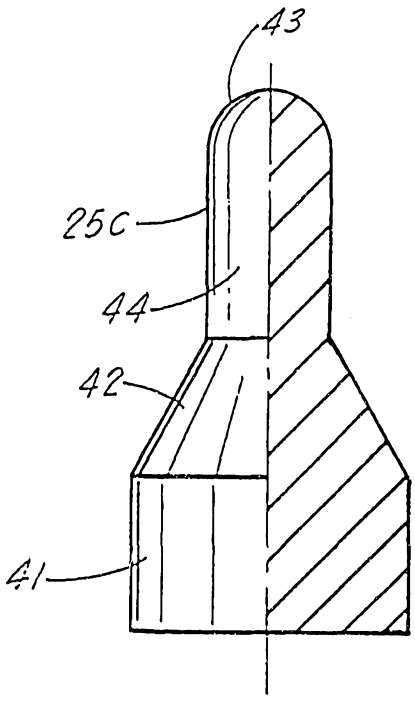

FIG. 10

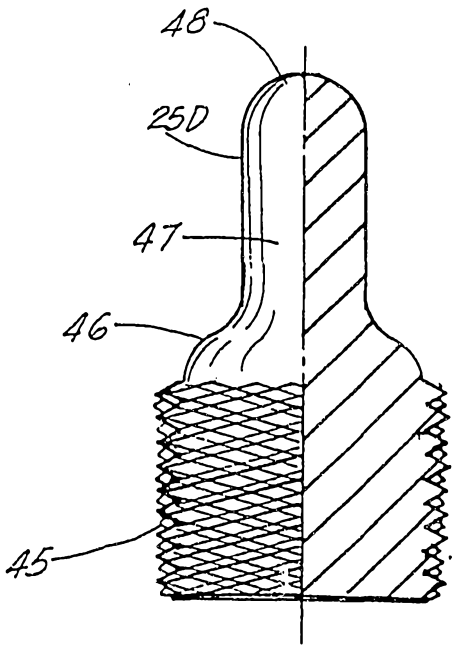

FIG. 11

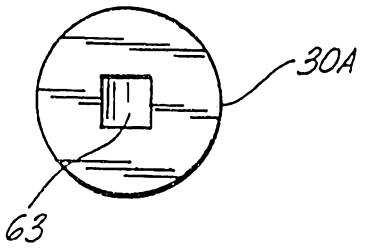

FIG. 12A

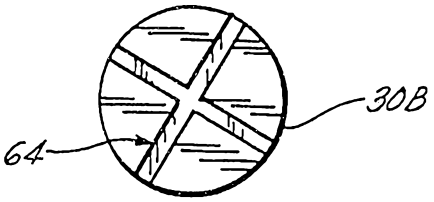

FIG. 12B

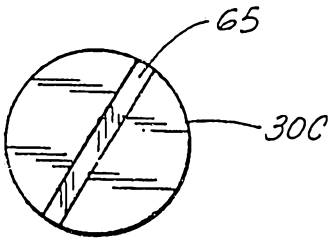

FIG. 12C

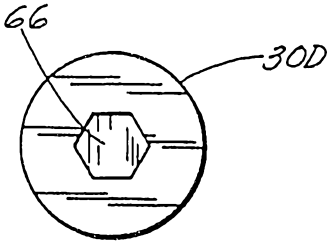

FIG. 12D

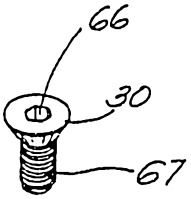

FIG. 13

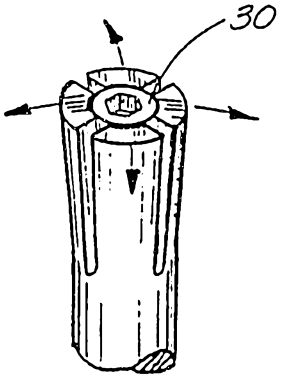

FIG. 14

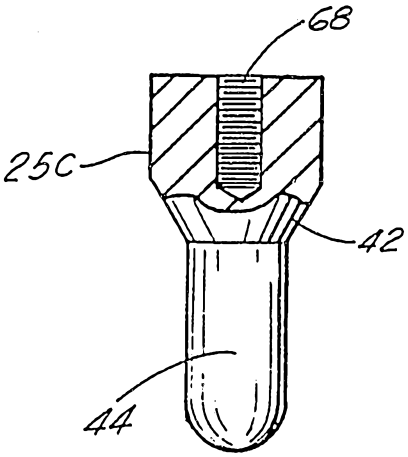

FIG. 15

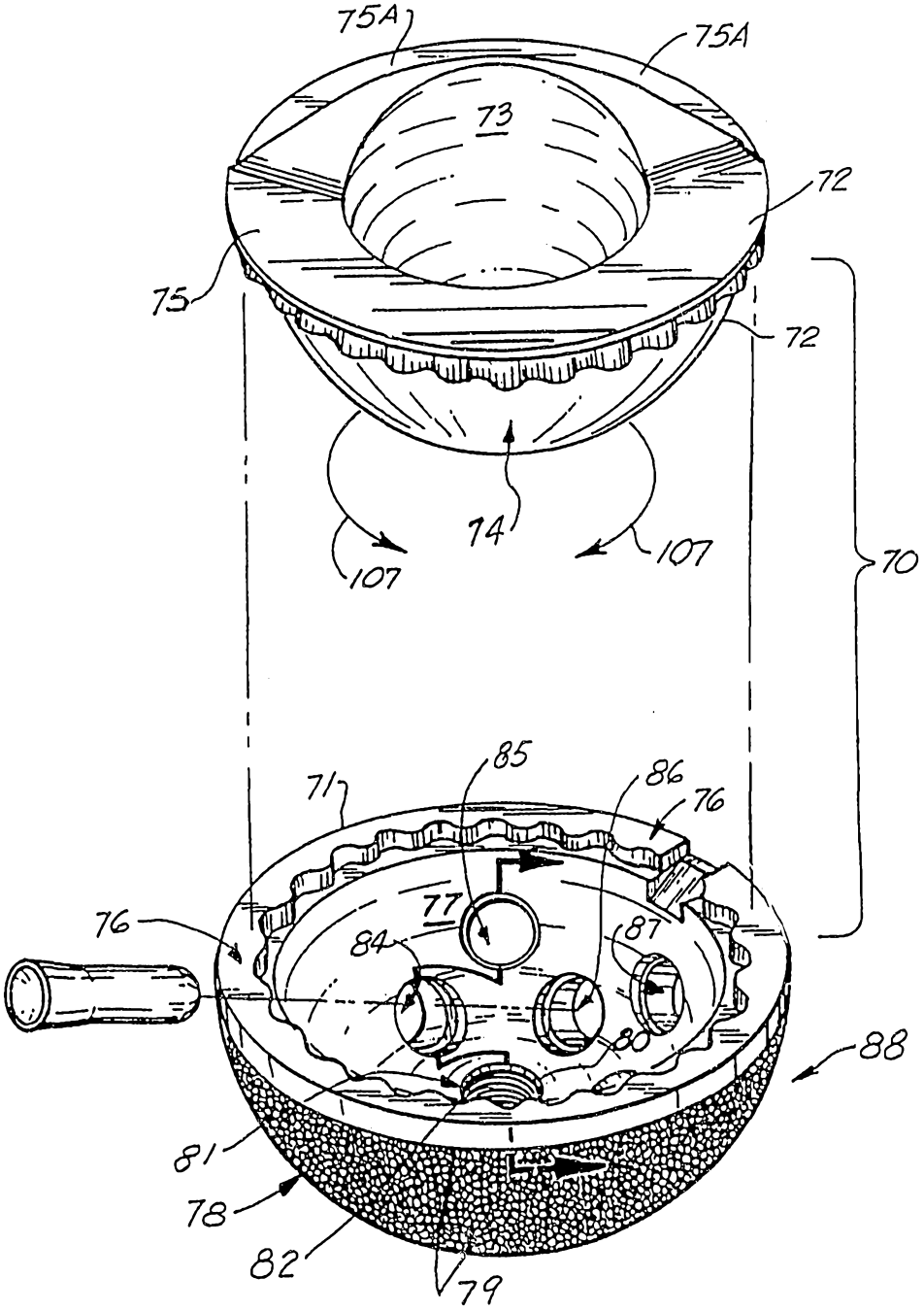
75A
75A
73
72
75
72
74
107
107
70
71
85
86
76
77
76
84
87
80
88
81
78
82
79

FIG. 16

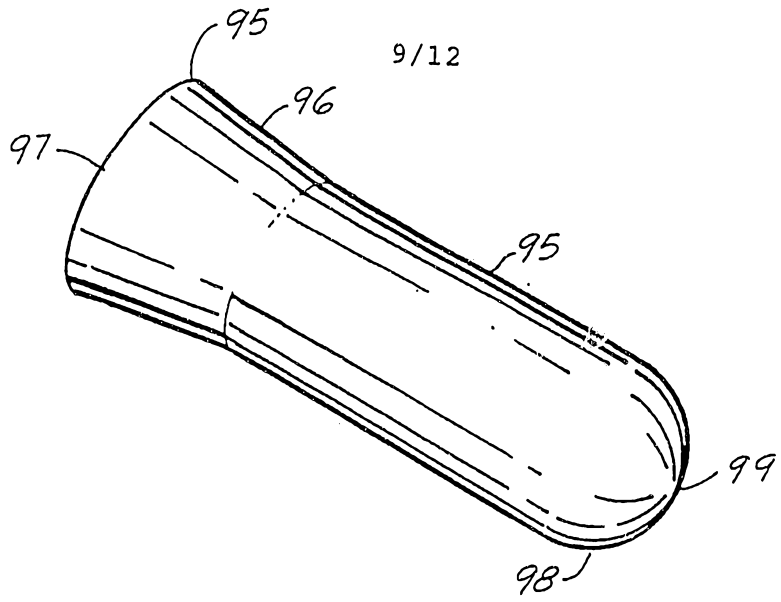

FIG. 17

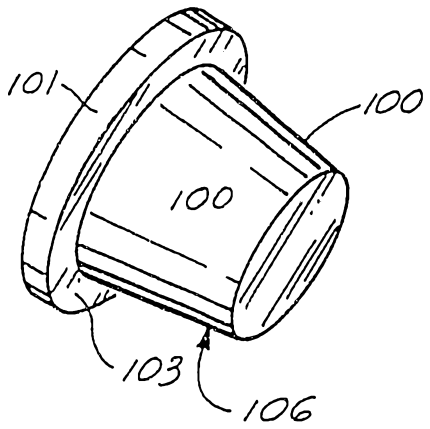

FIG. 18

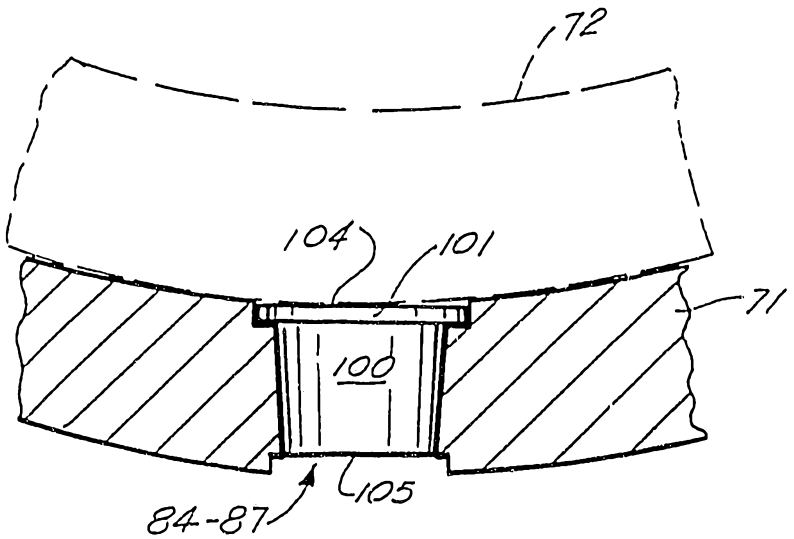

FIG. 19

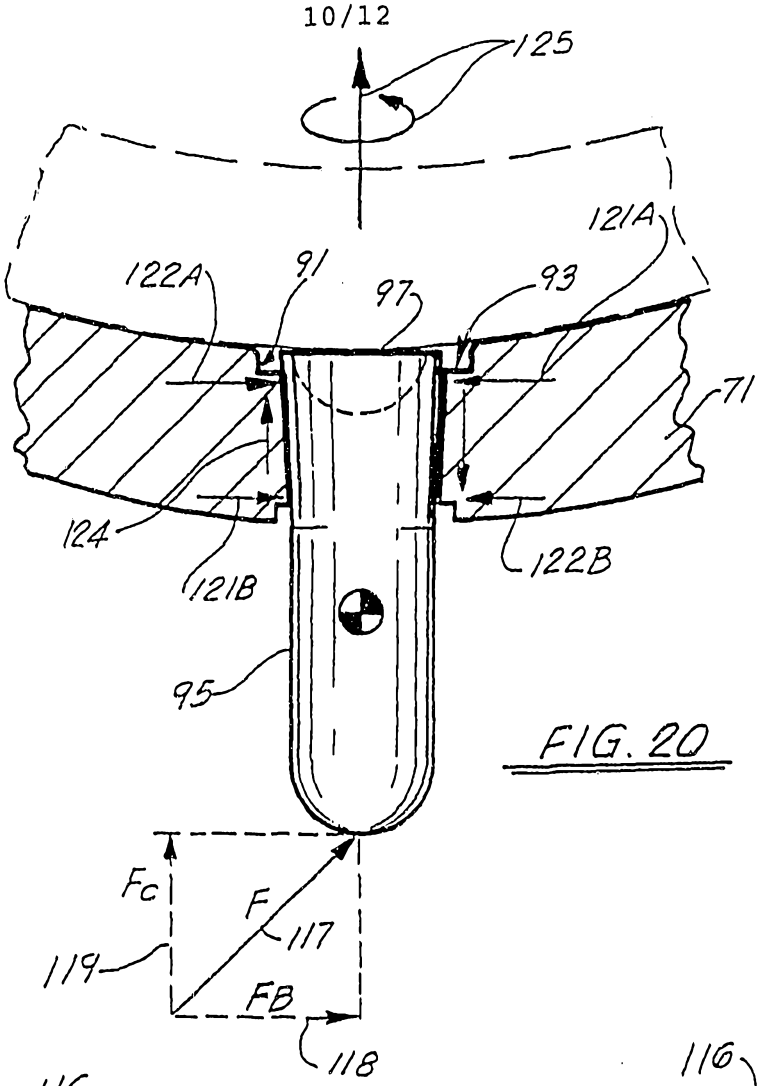
125
121A
122A
91
97
93
71
124
121B
122B
95
Fc
F
117
119
FB
118

FIG. 20

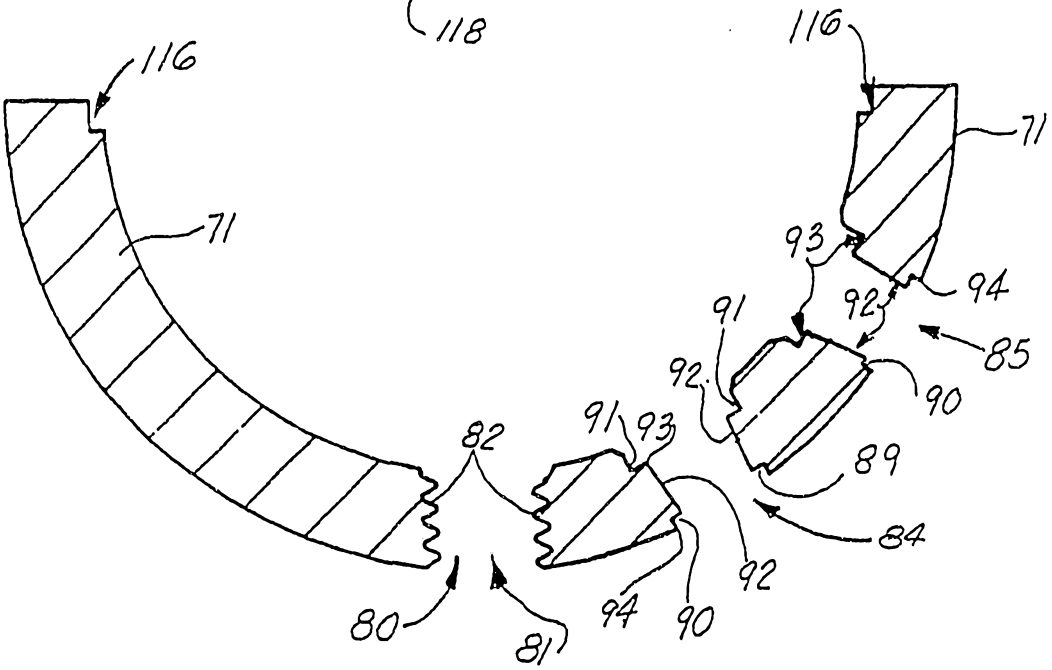
116
71
116
71
93
94
91
92
85
92
90
91
93
82
89
84
92
80
81
94
90

FIG. 21

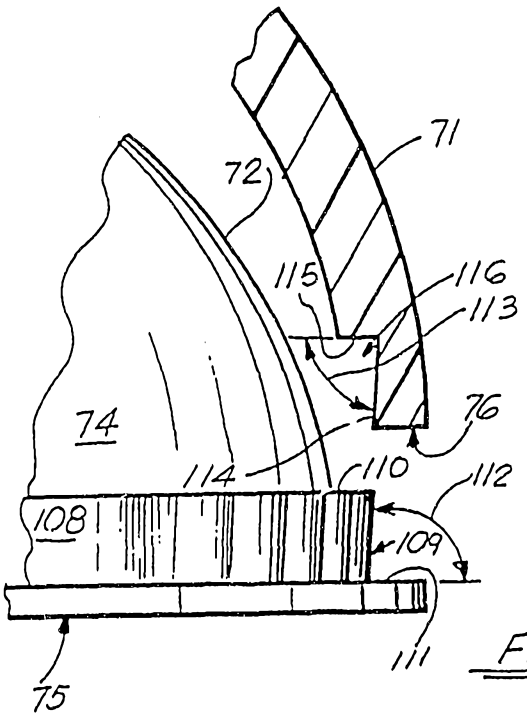
71
72
115
116
113
74
76
114
110
112
108
109
111
75

FIG. 22

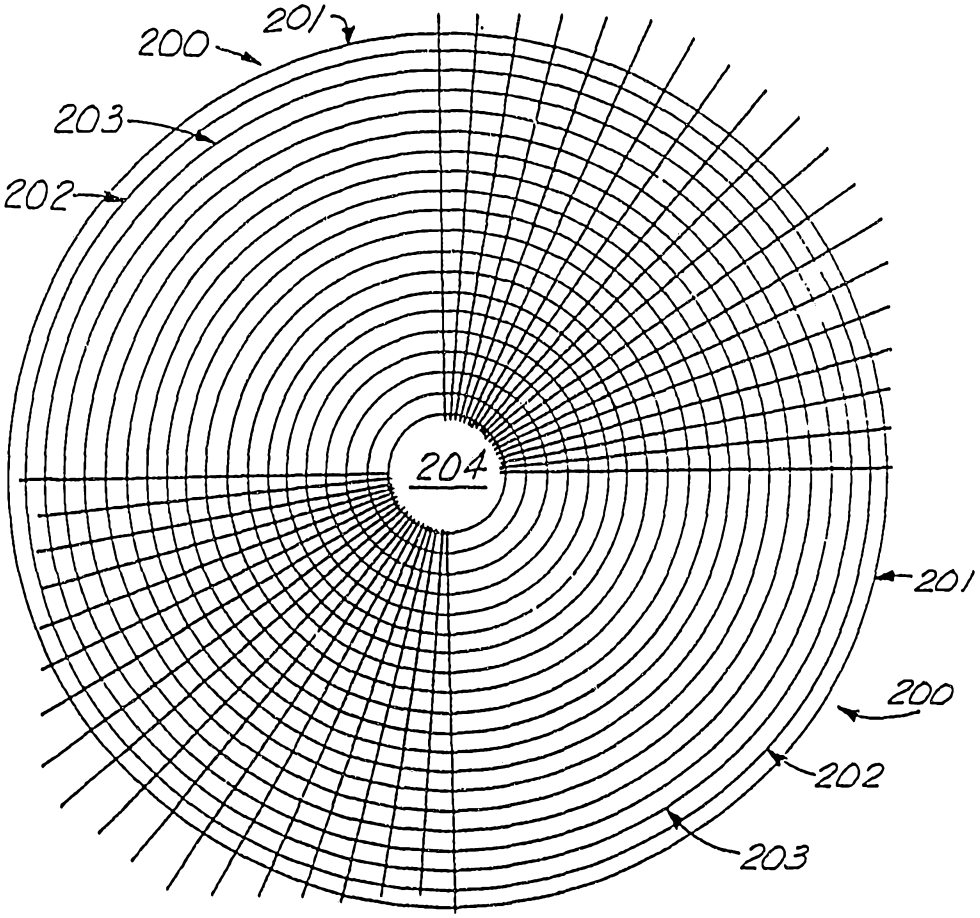
201
200
203
202
204
201
200
202
203

FIG. 23

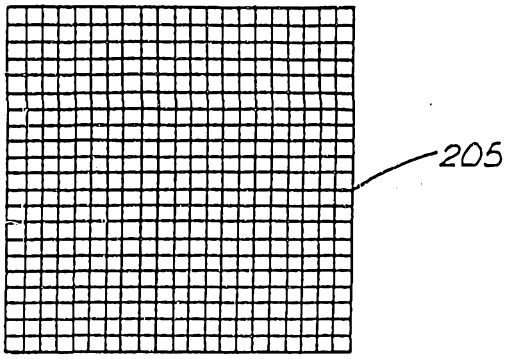

FIG. 24

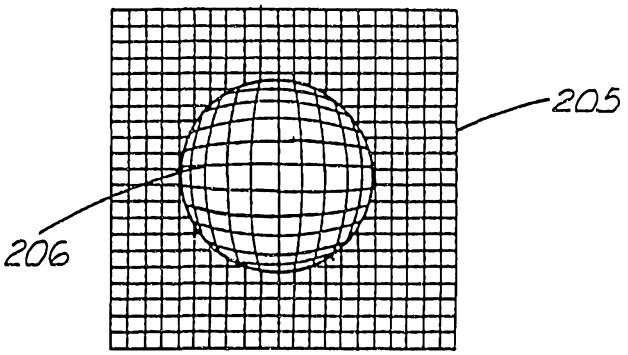

FIG. 25

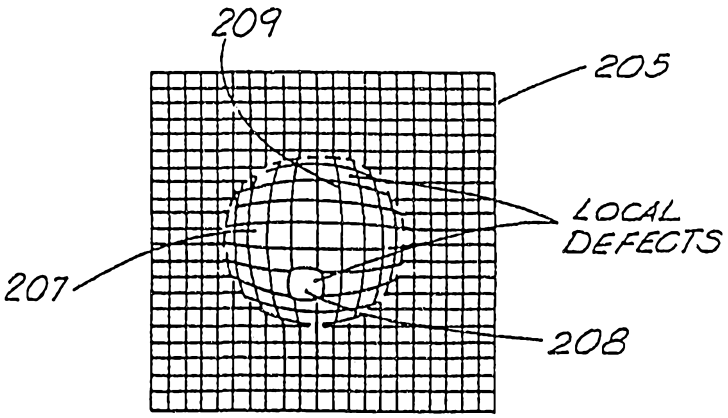

FIG. 26

INTERNATIONAL SEARCH REPORT

International application No.
PCT/US93/08295

A. CLASSIFICATION OF SUBJECT MATTER

IPC(5) :A61F 2/32
US CL :623/22

According to International Patent Classification (IPC) or to both national classification and IPC

B. FIELDS SEARCHED

Minimum documentation searched (classification system followed by classification symbols)

U.S. : 623/16, 18-20, 22, 23, 66

Documentation searched other than minimum documentation to the extent that such documents are included in the fields searched

Electronic data base consulted during the international search (name of data base and, where practicable, search terms used)

C. DOCUMENTS CONSIDERED TO BE RELEVANT

Category*	Citation of document, with indication, where appropriate, of the relevant passages	Relevant to claim No.
A	US, A, 4,770,661 (Oh) 13 September 1988, see entire document.	1-20
A	US, A, 4,676,798(NOILES) 30 June 1987. See entire document.	1-20

☐ Further documents are listed in the continuation of Box C. ☐ See patent family annex.

*	Special categories of cited documents:	"T"	later document published after the international filing date or priority date and not in conflict with the application but cited to understand the principle or theory underlying the invention
"A"	document defining the general state of the art which is not considered to be part of particular relevance	"X"	document of particular relevance; the claimed invention cannot be considered novel or cannot be considered to involve an inventive step when the document is taken alone
"E"	earlier document published on or after the international filing date	"Y"	document of particular relevance; the claimed invention cannot be considered to involve an inventive step when the document is combined with one or more other such documents, such combination being obvious to a person skilled in the art
"L"	document which may throw doubts on priority claim(s) or which is cited to establish the publication date of another citation or other special reason (as specified)	"&"	document member of the same patent family
"O"	document referring to an oral disclosure, use, exhibition or other means		
"P"	document published prior to the international filing date but later than the priority date claimed		

Date of the actual completion of the international search	Date of mailing of the international search report
12 November 1993	12 JAN 1994
Name and mailing address of the ISA/US Commissioner of Patents and Trademarks Box PCT Washington, D.C. 20231	Authorized officer FOR ISABELLA, DAVID
Facsimile No. NOT APPLICABLE	Telephone No. (703) 308-3060

Form PCT/ISA/210 (second sheet)(July 1992)*