E. E. LATHAM & R. BINNS.

MACHINES FOR GRINDING CALENDER-ROLLS.

No. 193,715. Patented July 31, 1877.

Fig. 1.

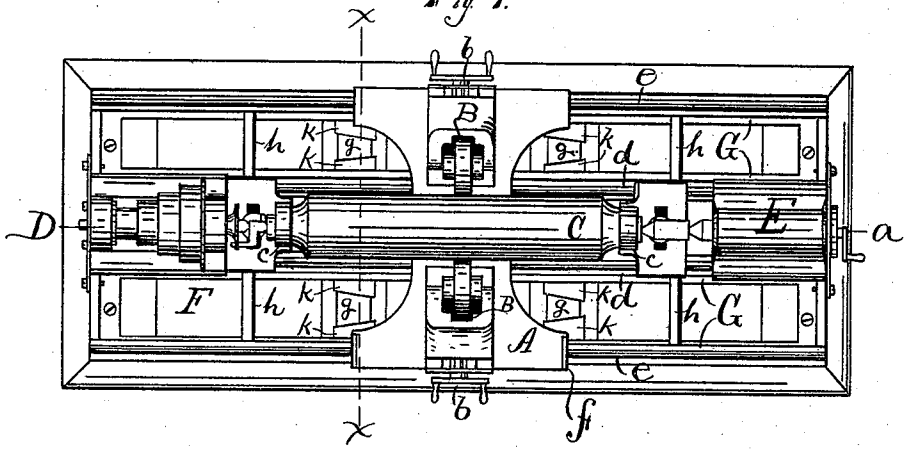

Fig. 2.

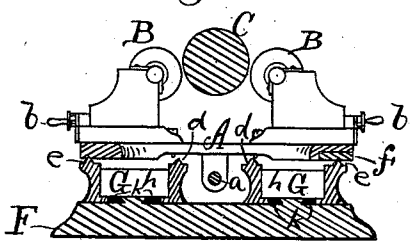

Witnesses:
H. J. Gale
Charles E. Mitchell

Inventor
Eugene E. Latham
Robert Binns,
By James Shepard atty.

N. PETERS, PHOTO-LITHOGRAPHER, WASHINGTON, D. C.

UNITED STATES PATENT OFFICE.

EUGENE E. LATHAM AND ROBERT BINNS, OF SOUTH WINDHAM, CONN.

IMPROVEMENT IN MACHINES FOR GRINDING CALENDER-ROLLS.

Specification forming part of Letters Patent No. **193,715**, dated July 31, 1877; application filed June 30, 1877.

To all whom it may concern:

Be it known that we, EUGENE E. LATHAM and ROBERT BINNS, both of South Windham, in the county of Windham and State of Connecticut, have invented certain new and useful Improvements in Machine for Grinding Calender-Rolls, of which the following is a specification:

Our invention consists in the peculiar construction and combination of parts, as hereinafter described and claimed.

In the accompanying drawings, Figure 1 is a plan view of a machine which embodies our invention, and Fig. 2 is a transverse section of the same on line *x x* of Fig. 1.

The invention has for its objects the grinding of calender and other rolls with great accuracy and by less labor than heretofore.

As in other machines for a like purpose, we employ a carriage, A, moving on ways, and operated by an automatic feed-screw, *a*. Said carriage is also provided with two grinding-wheels, B B, each provided with adjusting-screws *b b*. The roll C (the object to be ground) is placed on its own bearings, in proper supports *c c*, between the head and tail blocks D and E of a lathe, and rotary motion imparted to the roll and a traveling movement to the carriage, all in a well-known manner; but, unlike all prior machines, we construct the ways of the lathe and the V's of the carriage as follows, viz:

We first make a strong iron bed, F, which we call the main bed, and then two skeleton-beds, G G, the upper side of which contains the ways *d e*, the way *d* being for the head and tail block to slide upon, and the way *e* for the carriage A. The ways are all planed up as straight as is practicable, and then these skeleton-beds are set upon the main bed F, parallel to each other, and secured thereto at each end. The carriage A is constructed with a V at one end, formed in the solid metal of said carriage, and of an angle to correspond with the sides of the ways *e*. At the opposite end of the carriage a like V is formed in a shoe, *f*, upon which that end of the carriage rests. This shoe is so confined by lugs at each end that it must move endwise with the carriage, but is not confined so but that the carriage may move sidewise independent of the shoe, so as to compensate for any variation of distance between the ways *e e* at points along the length of the beds.

We place studs or projections *g* on the main bed F, and between the rails containing the ways *d* and *e*, said rails being rigidly connected together by proper stays *h h*. These studs are placed at different points along the length of the beds—say, in a full-sized machine, about once in two feet. The sides of these studs are inclined, as shown, to correspond to the inclined sides of the wedges *k k*, the straight sides of the wedges being in contact with the rails of the skeleton-beds G G, upon which the ways are formed. By loosening the inner one of the wedges *k*, and driving the outer one farther in, the way *e* may be sprung outward. By loosening the outer one of the wedges, and driving in the inner wedge, the way *e* may be sprung inward, the two rails of the skeleton-beds G G being connected by stays, as before described, so that springing one rail near one of the stays necessarily springs the other with it.

To prepare the machine for grinding rolls, a roll, C, is properly placed in the ordinary manner, and the carriage brought toward one end of the lathe, with the grinding-wheels B B opposite one end of the roll C, the lathe set in motion to rotate said roll, and the grinding-wheels adjusted until they both just come in contact with it. The carriage is then moved along, and in case either grinding-wheel ceases to remain in contact with the roll, a deviation from a straight line is detected. The carriage is, of course, governed mainly by the way upon which the solid V rides, which we will suppose is on the front side of the machine. In case the rear grinding-wheel is the one out of action, then the wedges K are adjusted to spring the front way outward toward the front until the rear grinding-wheel is again in contact with the roll. In the act of springing the way sidewise, the carriage moves slightly on the shoe *f*, so as not to raise that end, whereas in case both ends of the carriage were provided with a solid V without the shoe, the springing of one of the ways *e* without also springing its fellow would have a tendency to make one end of the carriage rise upward on the inclined sides of the way and V, and thereby throw one grinding-wheel out of or into con-

tact with the roll, so that the deviation from a straight line in the way could not be accurately tested by contact of both grinding-wheels; but with the shoe the carriage always remains in the same plane under the various changes in spreading or contracting the ways *e*. The carriage is moved on, and, if any deviation is detected, the front way is straightened by springing it through the medium of the wedges until both wheels remain in contact with the roll during the movement of the carriage back and forth from one end to the other of said roll, which will indicate that the front one of the ways *e* is straight. Both of the wedges in each pair should be driven in snugly, so as to prevent the way afterward springing in either direction. After straightening the front way the carriage may then be changed end for end, so that the solid V rides upon the rear way, and that may be straightened in like manner when the machine is in a condition to be set to work, and the roll will be ground automatically and with great accuracy.

In order to more conveniently reverse the carriage, the nut through which the feed-screw passes may be made detachable from the carriage.

We have herein specified wedges as the means of springing the rails; but it is evident that the same result may be accomplished by a main bed, skeleton-beds, and screws or cams for springing the skeleton-beds to straighten the ways in the manner described.

It is well known that it is impracticable to plane a long way perfectly straight, and the same arrangement of main bed, skeleton-beds, and means for springing the latter upon the former, may be advantageously employed in other than grinding-lathes for the purpose of straightening the ways, and, if desired, an indicator which will greatly multiply all deviation from a straight line may be employed to detect the irregularities.

We claim as our invention—

1. The main bed F, in combination with the skeleton-beds G G, bearing-ways *e e*, and mechanism for springing the latter upon the former, and retaining the same in place when so sprung, substantially as described, and for the purpose set forth.

2. The main bed F, skeleton-beds G G, bearing-ways *e e*, wedges *k k*, or the equivalent of said wedges, in combination with the carriage A and shoe *f*, operating together substantially as described, and for the purpose specified.

EUGENE E. LATHAM.
ROBERT BINNS.

Witnesses for Latham:
J. W. JOHNSON,
JOHN F. LAFLIN.

Witnesses for Binns:
HUBER CLARK,
MILO B. SHARP.