Sept. 13, 1960 A. R. BUNTING 2,952,456

COLLATING MACHINE

Filed May 22, 1959 4 Sheets-Sheet 1

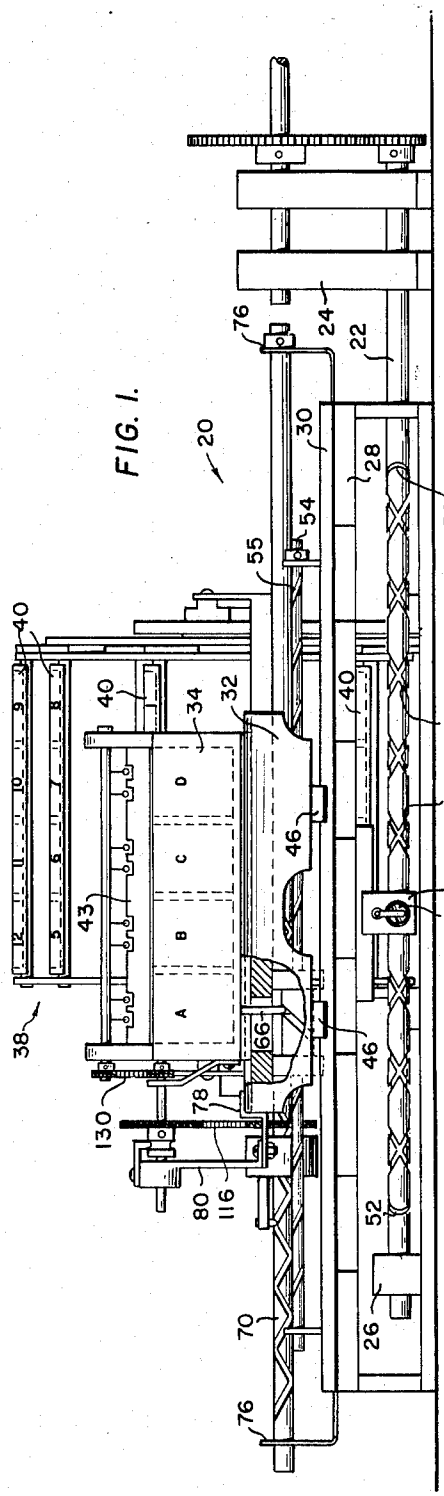

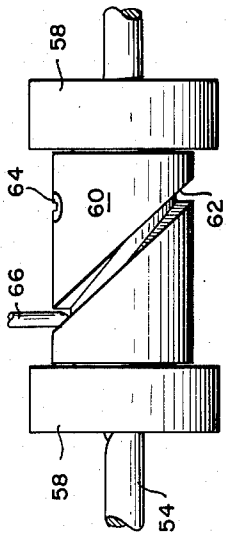

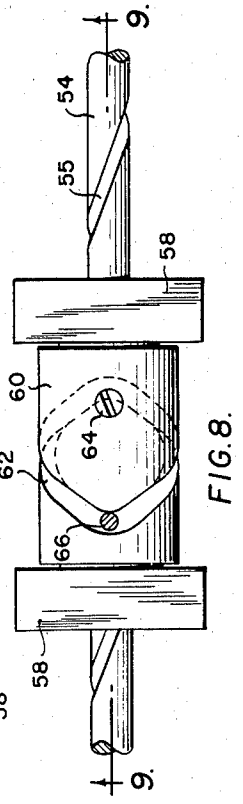

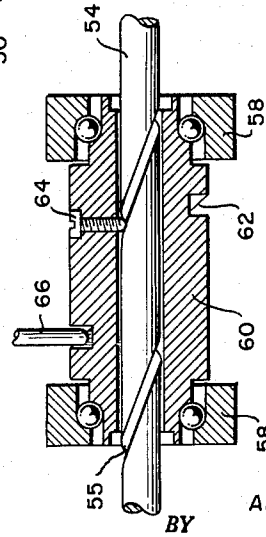

INVENTOR.
ALWYN R. BUNTING
BY
B. L. Zangard
ATTORNEYS

Sept. 13, 1960 A. R. BUNTING 2,952,456

COLLATING MACHINE

Filed May 22, 1959 4 Sheets-Sheet 2

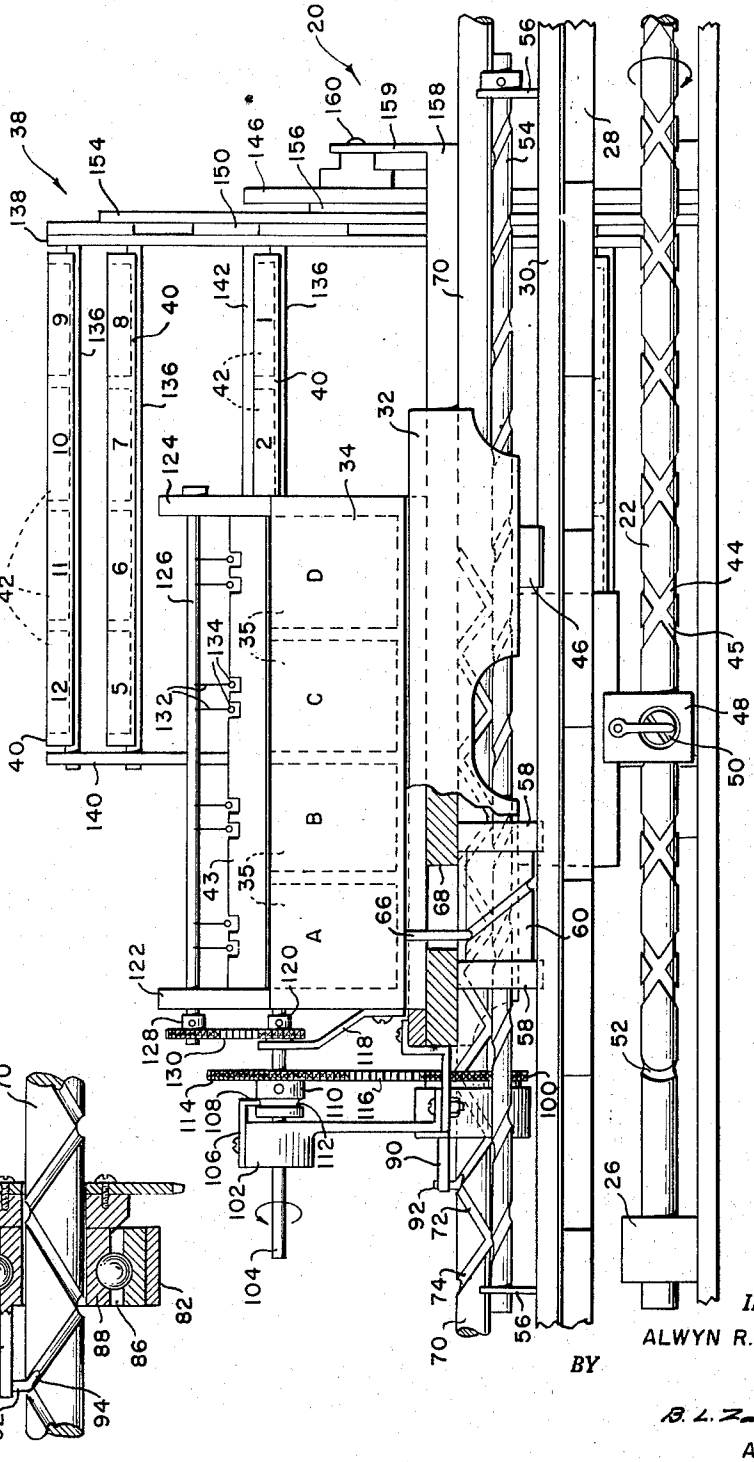

FIG. 2.

FIG. 3.

INVENTOR.
ALWYN R. BUNTING
BY
B. L. Zampiel
ATTORNEYS.

Sept. 13, 1960 A. R. BUNTING 2,952,456

COLLATING MACHINE

Filed May 22, 1959 4 Sheets-Sheet 3

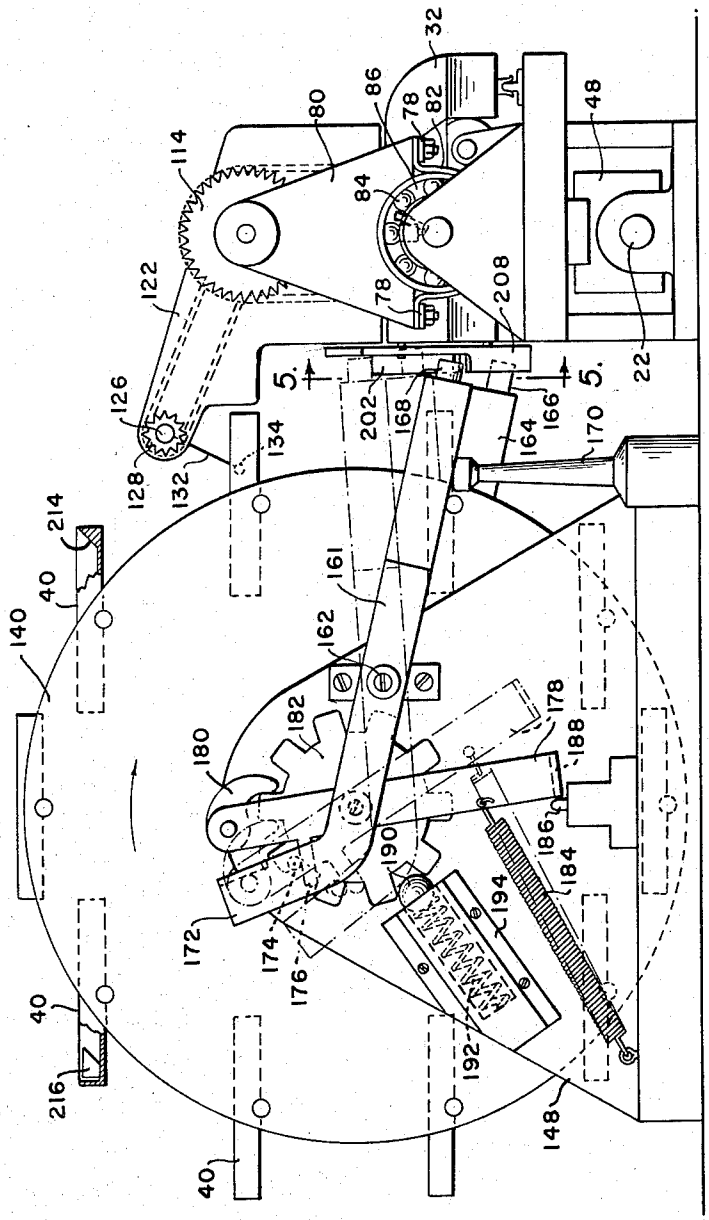

FIG. 4.

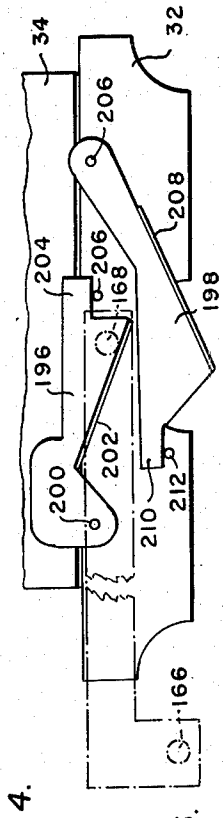

FIG. 5.

INVENTOR.
ALWYN R. BUNTING

BY

B. C. Zangerle
ATTORNEYS

Sept. 13, 1960 A. R. BUNTING 2,952,456

COLLATING MACHINE

Filed May 22, 1959 4 Sheets-Sheet 4

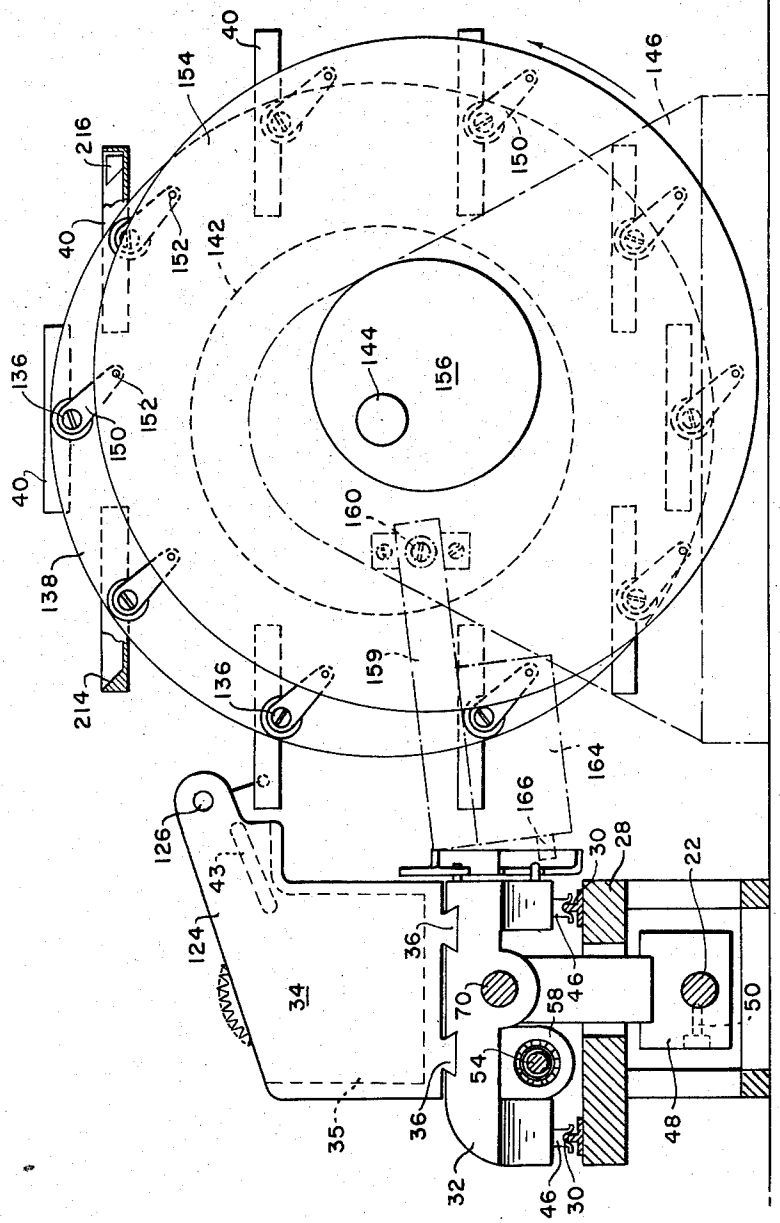

FIG. 6.

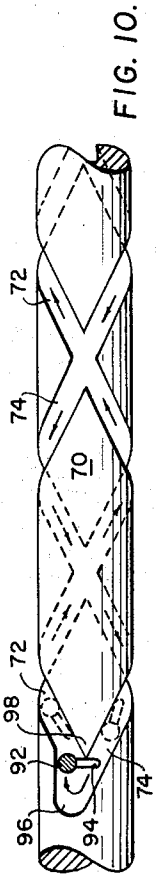

FIG. 10.

INVENTOR.

ALWYN R. BUNTING

BY

B. L. Zangwill

ATTORNEYS.

United States Patent Office 2,952,456
Patented Sept. 13, 1960

2,952,456

COLLATING MACHINE

Alwyn R. Bunting, 214 80th St., Virginia Beach, Va.

Filed May 22, 1959, Ser. No. 815,236

24 Claims. (Cl. 270—58)

(Granted under Title 35, U.S. Code (1952), sec. 266)

The invention described herein may be manufactured and used by or for the Government of the United States of America for governmental purposes without the payment of any royalities thereon or therefor.

This invention relates to a collating machine and more particularly to a machine for collating a plurality of sets of paper at one time.

In accordance with prior art practice, collator machines are generally adapted to collate or collect, only one set of sheets or papers at a time, as for example several sequentially arranged mimeographed sheets, and therefore require the removal of a completed set from a collection basket or the like prior to assembling together of a subsequent set of papers. In addition, prior art devices frequently make use of air pressure or suction means for sequentially removing sheets from a stack prior to feeding to a collection basket, which naturally requires a source of air pressure or vacuum, the need for which is eliminated in the instant invention. Furthermore, most prior art devices are extremely complicated and expensive to construct, particularly where the machine is adapted for automatic collation without the aid of hand feeding methods.

In accordance with the instant invention, the collator comprises a rotary ferris-wheel-like drum including a plurality of trays, each of which is adapted to hold a stack of sheets of the same page number. For example, the trays are numbered, and respectively contain a plurality of pages 1, pages 2, pages 3, etc. which are adapted to be assembled together to form a set of mimeographed or printed sheets where in each set, the pages are sequentially arranged. The instant apparatus includes a means for feeding the aforementioned stacked sheets sequentially to a plurality of collecting baskets in such a manner that the sheets are sequentially fed into each of the baskets so as to form a number of sets of sequentially arranged pages corresponding to the number of collection baskets utilized. The collection baskets are arranged to move transversely of the trays in such manner that the sheets are sequentially fed from the trays into the baskets so that a plurality of sets are collected in the baskets, one set per basket. It is pointed out that certain of the trays may contain colored separation sheets so that the machine may be operated continually whereby more than one set may be collected in each basket. Thus the instant invention, unlike the prior art collator machines, is adapted to collate and collect several sets of sheets rather than only one set. In addition, the instant apparatus is relatively simple in construction and fool proof in operation, being comparatively inexpensive to construct, operate and maintain; in addition to which, the instant apparatus does not require the use of an air pressure or vacuum means to separate the sheets in the trays prior to feeding into the collection baskets.

It is accordingly an object of this invention to provide a collator machine adapted to overcome the inherent disadvantages found in the prior art.

Another object of this invention is to provide a new and improved collating machine having means for simultaneously collating and collecting a plurality of sets of sequentially numbered sheets of paper.

Still another object of this invention is to provide a new and improved collating machine adapted to simultaneously collate and store a plurality of identical sets of sequentially numbered sheets of paper at one time.

Other objects and many of the attendant advantages of this invention will be readily appreciated as the same becomes better understood by reference to the following detailed description when considered in connection with the accompanying drawings, wherein:

Fig. 1 is an elevational view, partially broken away, of the collator produced in accordance with the instant invention;

Fig. 2 is an enlarged elevational view, partially broken away, of a portion of the structure shown in Fig. 1, at an advanced operative position;

Fig. 3 is an enlarged sectional view, partially broken away, of a portion of the structure shown at the left hand side of Fig. 2;

Fig. 4 is a side elevational view of the instant invention looking at the left hand side of Fig. 2;

Fig. 5 is a sectional view taken on line 5—5 of Fig. 4;

Fig. 6 is a side elevational view of the instant invention looking at the right-hand side of the structure shown in Fig. 2;

Fig. 7 is an enlarged view, partially broken away, of a portion of the structure shown in the broken away section in Fig. 1;

Fig. 8 is a plan view of the structure shown in Fig. 7;

Fig. 9 is a sectional view taken on line 9—9 of Fig. 8; and

Fig. 10 is an enlarged plan view, partially broken away, of the uppermost double-lead-screw shown in Fig. 2.

Referring now to the drawings wherein like reference characters designate like or corresponding parts throughout the several views, there is shown in Fig. 1 an elevational view of the overall structure of a collator 20 constructed in accordance with the instant invention. The collator 20 includes a main input drive shaft 22 having double-lead-screw threads cut in its surface. The shaft 22 is rotatably mounted at its opposite ends in a pair of bearings 24 and 26, and is located beneath a horizontal platform 28 which has a pair of tracks 30 fixedly mounted thereon. A carriage 32 is slidably mounted on the tracks 30 and is reciprocably driven, through a connection hereinafter described, by the double lead-screw 22. The carriage 32 has an open top container 34 reciprocably mounted on its upper surface, said container 34 having a pair of dovetail tongues 36 in slidable connection with like shaped grooves in the upper surface of the carriage 32. It is pointed out that the container 34 is divided in four compartments 35 in the instant embodiment of the invention, said compartments being designated in the drawings by the letters A, B, C and D.

The carriage 32 and container 34 are adapted to move past a rotatable, ferris-wheel-like drum 38 having circumferentially mounted thereon a plurality of platforms 40 each of which is divided into compartments or trays 42 equal in number to the number of compartments 35, and each is adapted to hold a stack of sheets of paper. In a manner hereinafter described, the circumferentially spaced platforms 40 are held in a horizontal plane at all times during rotation of the drum 38. Each platform 40 temporarily comes to rest in a position juxtaposed with the upper edge of the movable container 34 so that individual sheets of paper may be fed from the trays 42 into a plurality of corresponding compartments 35 in the movable

container 34. The structure is so arranged that the carriage 32 is adapted to move transversely of the rotary drum 38, momentarily coming to rest before each of the trays 42 in a juxtaposed platform so that the top sheet in each of the trays may be fed from said trays into the corresponding compartments 35 in the container 34.

It is pointed out that the container 34 is provided with a longitudinally extending plate 43, at the side of the container nearest the platforms 40. The plate 43 has its opposite ends fixed to the respective ends of the container 34, and has its lower face downwardly inclined toward the respective compartments 35. The lower face of the plate 43 is spaced from the upper edge of each of the compartments 35 to form, with said upper edge, a chute that is directed toward said compartments, said chute being adapted to receive each sheet of paper fed from a tray 42 toward a compartment 35 and direct said sheet into said compartment.

Referring now to Figures 1 and 2 in particular, it is pointed out that the double lead-screw 22 is provided with a pair of spiral grooves 44 and 45 in the manner of a conventional double lead-screw. The carriage 32 is provided with runners 46 on its lower surface slidably mounted on the tracks 30.

In addition, the carriage 32 is provided with a downwardly extending bracket 48 having a hole extending through the lower end thereof through which the double lead-screw 22 passes. The bracket 48 is provided with a follower 50 rotatably mounted in the bracket and having an elongated inner end portion that rides in the grooves in the double lead screw 22. Thus, assuming that the follower 50 is in the groove 44, when the lead screw 22 is rotated in a counter clockwise direction, as viewed in Fig. 6, rotation of said lead screw causes the bracket 48 and the carriage 32 to be fed from right to left, as viewed in Fig. 1, assuming that said carriage started from the extreme right hand position. Continuing rotation of the lead screw 22 causes the carriage 32 to be fed along the tracks 30 until the follower 50 reaches a curved reversal portion 52 at the left hand end of the groove 44, at which time continued counterclockwise rotation of the lead screw 22 causes entry of the follower 50 into the groove 45 with an ensuing reversal in movement of the carriage 32.

Extending beneath the carriage, and parallel to the double lead-screw 22, is a single thread lead-screw 54 having its opposite ends fixedly mounted in a pair of brackets 56, and having a single spiral groove 55 in its surface. The single lead screw extends through a hole provided in each of a downwardly extending pair of brackets 58 fixedly connected to the underside of the carriage 32, and through a cylindrical cam 60 located between said brackets. The cam 60 is rotatably mounted on the fixed single lead screw 54 and has a cam groove 62 in the surface thereof of the type shown in Figs. 7–9. The opposite ends of the cam 60 are bearing journaled in the brackets 58, as shown in Fig. 9. Rotation of the cam is brought about by means of the interaction of a follower 64 fixedly attached to said cam and having the end therethrough extending into the spiral groove 55 formed in the lead-screw 54, so that as the carriage 32 is moved relative to the tracks 30 and thus relative to the single lead-screw 54, such movement of the carriage causes rotation of the cam 60 by interaction of the groove 55 and the follower 64 on the interior of said cam 60.

Referring to Figs. 1, 2, 7, 8 and 9, the underside of the container 34 is provided with a fixed downwardly extending stud 66. The stud 66 is movable within a slot 68 formed in the carriage 32 and has its lowermost end located within the groove 62 in the rotary cam 60 so that rotation of the cam, which comes about as a result of the translation of the carriage 32, causes a periodic sliding movement of the container 34 relative to said carriage. It is pointed out that by virtue of the shape of the cam groove 62 and the relation therewith of the downwardly extending stud 66, sliding movement of the carriage 32, assuming that the carriage is moving from right to left as viewed in Fig. 1, will cause clockwise rotation of the cam 60, as viewed from the right hand side of Fig. 1 when the cam groove 62 and the follower 66 are in the positions shown in Fig. 1. Continuing clockwise rotation of the cam will cause the container 34 to be moved relative to the carriage 32, said carriage continuing its movement at all times.

When the groove 62 and follower 66 reach the relative position shown in Figs. 2 and 7 thru 9, further movement of the carriage 32 toward the left, and ensuring clockwise rotation of the cam 60, causes the follower 66 to move, in effect, lengthwise of the cam from left to right, as viewed in Figs. 7–9, so that the container 34 remains stationary relative to the rotary drum 38, and moves toward the right relative to the carriage 32. The container 34 remains in this stationary position until the lowermost end of the cam groove 62, as viewed in Fig. 7 reaches its uppermost position, as shown in Fig. 1, at which time further rotation of the cam 60 results in a movement of the container 34 toward the left relative to the carriage 32 and the rotary drum 38. The driving elements of the instant collator are so proportioned that the carriage 32 is adapted to slide at all times, while the container 34 is adapted to come to a temporary halt, at predetermined intervals of time, in front of successive trays 42 in each of the platforms 40, at which time, in the manner hereinafter described, the topmost sheet of paper in each of the trays 42 is adapted to be fed into a corresponding compartment 35 in the container 34, after which the carriage 32 and container proceed to move relative to the drum 38, from for example the position shown in Fig. 1 to the position shown in Fig. 2, at which time there is another period of dwell and another set of papers is fed into the compartments 35.

The exact manner in which the sheets are sequentially fed from the trays 42 into the compartments 35 so as to arrange the papers in the proper order, will be hereinafter described in greater detail.

A second double lead-screw 70, having cam grooves 72 and 74 cut in the surface thereof, is located above the horizontal platform 28 and tracks 30 in parallel relation therewith, and has its opposite ends fixedly mounted in a pair of brackets 76. The carriage 32 is provided at its left hand end, as viewed in Fig. 1, with an outwardly extending horizontal bracket 78 having a vertical bracket 80 attached thereto and extending upwardly therefrom. The horizontal bracket 78 is also provided with a downwardly extending U-shaped clamp element 82 having its opposite ends bolted to said horizontal bracket. The U-shaped clamp 82, in conjunction with the arcuate lower edge of the upwardly extending bracket 80 serve to clamp the outer race 84 of a ball bearing 86 in fixed relation relative to the bracket 80 and the carriage 32. The inner race 88 of the ball bearing is provided with a laterally extending arm 90 having a downwardly extending, rotatably mounted finger or cam follower 92 at its outer end (see Fig. 3 in particular). The cam follower 92 is substantially L-shaped, having the foot portion 94 alternatively slidably mounted in the cam grooves 72 and 74 in the stationary double lead-screw 70. The double lead-screw is provided at each of its ends with an enlarged cam follower turning-groove 96. When the follower 94 reaches the left hand end of the cam groove 74, as shown in Fig. 10, there will be a camming or turning action of said follower 92 brought about by interaction of the laterally extending portion 94 on the follower, and an apex 98 at the point of intersection of the cam grooves 72 and 74. The laterally extending portion 94 is allowed to swing in a clockwise direction in the enlarged cam groove 96, and when the direction of movement of the carriage is reversed so as to move to the right, by interaction of the cam follower 50 with the rotary double lead-screw 22, the follower 94 moves from the lowermost dotted position

shown in Fig. 10 to the uppermost dotted position thus insuring movement of said cam follower into the cam groove 72 on the double lead screw 70 so that when said carriage moves toward the right, as viewed in Fig. 1, the inner race of the bearing will continue to rotate in the same direction as when the carriage moves toward the left.

The side of the inner race 88 between said bearing and the carriage is provided with a sprocket wheel 100 fixedly attached thereto and adapted to rotate therewith by virtue of the interaction of the cam follower 92 and the grooves 72 and 74 in the double lead-screw 70. The upper end of the vertical bracket 80 has a journal 102 at its upper end having a hole extending therethrough, and having a shaft 104 rotatably and laterally slidably mounted therein. The uppermost end of the vertical bracket 80 also is provided with a fixedly mounted, laterally, inwardly extending finger 106 having a downwardly extending detent 108 at its outer end, said detent being in restraining contact with a rotatable bushing 110, and riding in a peripheral groove 112 in the surface of said bushing. The bushing 110 is provided with an axially extending hole through its center; the hole is round throughout most of its circumference but is provided with a flat or chord-like portion and the portion of the shaft 104 extending through said hole is provided with a flat portion extending for a substantial part of its length that is located between the vertical bracket 80 and the container 34. The flat portion of the shaft 104 is in contact with the flat portion of the hole in the rotary bushing 110 so that rotation of said bushing causes rotation of the shaft 104, while at the same time said shaft is adapted to slide laterally of said bushing 110, for purposes hereinafter described. The rotary bushing is provided at one side with a fixedly mounted sprocket wheel 114, and a chain 116 extends around said sprocket wheel 114 and the sprocket wheel 100 on the rotary race 88 so that rotation of said race causes rotation of the rotary bushing 110 and the shaft 104.

The rotary shaft 104 is supported adjacent its right hand end by an outwardly extending bracket 118 affixed to the container 34, the upper end of the bracket having a hole therein for said shaft through which the shaft passes. The extreme right hand end of the shaft 104 is in abutment with the left hand side of the container 34 so as to prevent right hand movement of said shaft relative to said container. Between the bracket 118 and the container 34 the shaft 104 has a small sprocket wheel 120 fixedly mounted thereon for rotation therewith the left hand side of said sprocket wheel being in abutment with the right hand face of the bracket 118 so as to prevent left hand movement of the shaft 104 relative to the bracket. Thus, by virtue of the spacial arrangement between the small sprocket wheel 120, the bracket 118 and the left hand face of the container 34, lateral movement of the shaft relative to the container is prevented, but when said container moves relative to the carriage 32 it will in turn cause lateral movement of the shaft 104 relative to the vertical bracket 80 and the large sprocket wheel 114 associated with said bracket. Accordingly, when the container 34 moves relative to the carriage 32, in the manner described in the above paragraphs, the shaft 104 is free to slide laterally of the vertical bracket 80, but at the same time, due to the flat portion on said shaft and on the interior of the rotary bushing 110, said shaft will continue to rotate at all times.

The upper side of the container 34 is provided with a pair of upwardly and forwardly extending arms 122 and 124 that extend towards the rotary drum 38, and a rotary shaft 126 is mounted in bearings provided adjacent the respective upper extremities of said arms. At the left hand end of the rotary shaft 126 there is fixedly mounted a small sprocket wheel 128. A chain 130 connects the two small sprocket wheels 120 and 128 so that rotation of the inner bearing race 88 accordingly causes rotation of the large sprocket wheels 100 and 114, the two smaller sprocket wheels 120 and 128, and thus the rotary shaft 126 at the upper side of the container 34. Rotation of the shaft 126 causes rotation of a plurality of resilient feed fingers 132 made of metal or the like and having their innermost ends fixedly connected to said shaft, and having their outermost ends provided with a frictional material 134 such as rubber or the like. The tips 134 of the fingers 132 are adapted to come in contact with the topmost sheet in the trays 42 so that rotation of the shaft 126 causes feeding of said topmost sheet into a corresponding compartment 35 in the container 34. The fingers are of such resiliency that they will continue to feed sheets of paper from the trays regardless of the number of sheets contained therein, including the last sheet in each tray.

Referring in more detail to the arrangement of the platforms 40, it is pointed out that each of the platforms has a shaft 136 affixed to the underside thereof and having its opposite ends extending outwardly from the platform at each end of the platform. The respective ends of each shaft 136 are pivotly mounted around the periphery of a right hand disc 138, and a left hand disc 140, said discs being parallel to one another. The right and left hand discs 138 and 140 are fixedly connected to a tubular member 142 that is fixed to a rotary shaft 144 that is rotatably carried at its opposite end in a right hand bracket 146 and a left hand bracket 148, see Figs. 1 and 2 for example. At the right hand side of the drum 38 (see Figs. 2 and 6), each of the ends of the shafts 136 that is rotatably mounted in the disc 138 is provided with a connecting arm 150 having one end fixedly connected to the shaft 136, and the other end thereof pivotly connected by a pin 152 to a third disc 154, adjacent the periphery of said disc. The disc 154 is rotatably mounted about a bushing 156 affixed to the right hand bracket 146, the center of said bushing being the axis of rotation of said third disc 154, which in a sense can be described as a cam disc. The respective points of connection 152 between the outermost end of the connecting arms 150 are equally spaced from the axis of rotation of the cam disc 154. It is however emphasized that the axis of rotation of the cam disc is offset, downwardly and toward the right, as viewed in Fig. 6, from the axis of rotation of the shaft 144; the distance of displacement being equal to the distance between the respective axis of rotation at the opposite ends of each connecting arm. It is emphasized that the distances between the pivotal connection of the respective connecting arms 150 to the cam disc 154, and the center of rotation of said cam disc are all equal and are located on radii of said disc, thus causing the connecting arms to be parallel to one another at all times.

By virtue of the manner in which the connecting arms 150 are connected at their respective ends to the respective platforms 40 and the cam disc 154, the axis of which is offset from the axis of rotation of the drum 38, said arms are always parallel to one another and therefore once the platforms 40 are each placed in a horizontal plane, they will remain in such a plane as they are rotated about the axis of the shaft 144.

Referring to Figs. 2, 4 and 6, there is shown a U-shaped lever 158 having rearward arms 159 and 161 pivotly connected to the right and left hand supporting brackets 146 and 148 by pivotal connections 160 and 162 respectively at the right and left hand ends of the lever 158. Attached to the arm 159 there is a fixedly attached, downwardly extending support member 164 having a stud, or cam follower 166 rotatably carried thereon, which stud 166 extends toward the carriage 32. On the arm 161 there is provided a rotatable, outwardly and downwardly extending stud, or cam follower 168 located in a plane higher than the right end stud 166, but like stud 166 extending toward the carriage 32. Downward movement of the U-shaped lever 158 is prevented by a stop member 170 fixed to the base of the apparatus and extending

upwardly to stop the U-shaped lever in its downward movement.

Referring in detail to Fig. 4, the rearward arm **161** on the U-shaped lever **158** is provided with an upwardly extending arm **172** spaced from and substantially parallel to the rotary drum supporting bracket **148**. The upwardly extending arm **172** is provided with a laterally extending finger **174** affixed thereto and extending toward the vertical bracket **148**. The finger **174** is adapted, upon upward movement of the forward end of the U-shaped lever, to contact and turn in a counter-clockwise direction a rearwardly extending finger **176** fixedly attached to a lever **178** pivotally connected to the rotary shaft **144**. The rotary lever **178** is provided at its upper end with a rotatable pawl **180** the free end of which is adapted to extend between adjacent teeth on what can be described as a ratchet wheel **182** fixedly attached to the rotary shaft **144**. Adjacent the opposite end of the rotary lever **178** there is affixed one end of a coil spring **184**, and the other end of the coil spring is attached to the base of the apparatus, said coil spring tending to rotate the lever about its axis in a clockwise direction, as viewed in Fig. 4. Clockwise rotation of the rotary lever **178** is arrested by a stop detent **186** attached to the base of the machine and extending upwardly into the path of movement of an offset arm **188** provided at the lower end of the rotary lever. Free rotation of the ratchet wheel, and thus the rotary shaft **144** and the platform **40** carring means is prevented by a spring pressed ball member **190** adapted to fit between adjacent teeth of the ratchet wheel **182**, the ball **190** being biased by a coil spring **192** contained within a carrier **194** connected to the supporting bracket **148**.

Thus if the forward end, or bight portion, of the U-shaped lever **158** is pivoted upwardly, the cam finger **174** on said U-shaped lever will push downwardly on the rearwardly extending finger **176** causing counterclockwise rotation of the rotary lever **178**. Counterclockwise rotation of the lever **178** and its attached pawl **180** will be from the position shown in solid lines in Fig. 4 to the position shown in dotted lines, with the result that the pawl moves over the top of a ratchet tooth and then drops down into the space just behind said tooth. Then when the right hand end of the U-shaped lever is released, the action of the coil spring **184** upon the rotary lever **178** causes clockwise rotation of said lever, thereby causing the pawl **180** to turn the ratchet wheel **182** in a clockwise direction which of course causes rotation of the rotary shaft **144**, to which the ratchet wheel is attached, and also rotation of the platform supporting members **138** and **140**. The elements are so proportioned that the ratchet wheel is rotated against the restraining action of the spring biased ball **190**, a distance sufficient to bring the next higher platform into alignment with the upper edge of the paper receiving container **34** so that the papers in said next platform may be fed into said container.

In order to clearly understand the manner in which the bight portion of the U-shaped lever **158** is raised, reference should be had to Figs. 4, 5 and 6. The rearmost face of the carriage **32** has attached thereto a pair of cam plates and more specifically an upper cam plate **196** and a lower cam plate **198**. The upper cam plate **196**, as viewed in Fig. 5, has its left hand end pivotly connected to the rear of the carriage **32** by a pin **200**, and has a rearwardly extending, inclined cam track **202** adjacent its lower edge. The right hand end of the upper cam plate **196** is provided with an outward extension **204**, the lower edge of which is normally in abutment with a stop detent **206** adapted to prevent clockwise rotation of the cam plate about its left hand pivot **200**.

The lowermost cam plate **198** is pivotly connected at its right hand end to the rear side of the carriage **32** by a pin **206**. The lower edge of the cam plate **198** is provided with a rearwardly extending, inclined cam track **208** that slopes downwardly and to the left, as viewed in Fig. 5. The lefthand end of the lower cam plate **198** is provided with an outward extension **210**, the lower edge of which abuts a stop detent **212** adapted to prevent counterclockwise rotation of the cam plate.

The cam track **202** on the cam plate **196** is adapted to come in contact with the follower stud **168** at the left hand side of the U-shaped lever **158** as the carriage moves towards the left, as viewed in Figs. 1 and 2. As movement of the carriage **32** proceeds, the follower stud **168** is moved upwardly, as shown in dotted lines in Fig. 4, until the carriage moves a distance sufficient for said follower stud to drop free in a downward direction from the left hand edge of the cam track **202** (see Fig. 5). The upward movement of the follower stud **168** causes counterclockwise rotation of the U-shaped lever **158** with an ensuing like rotation of the rotary lever **178** and backward movement of the pawl **180** so that the pawl falls into a rearward space, to the position shown in dotted lines in Fig. 4, all as set forth above. When the follower stud **168** drops free of the upper edge of the cam track **202**, the U-shaped lever drops downwardly with the ensuing effect that the coil spring **184** causes clockwise rotation of the rotary lever **178** and the pawl **180** then forces the ratchet wheel **182** to turn in a clockwise direction, a distance sufficient to bring the next uppermost platform **40** into alignment with the upper edge of the sheet receiving container **34**. At this point the carriage reverses its movement, through the interactions of the follower **50** and the double lead screw **22**, and starts to move toward the right. Movement continues a point where the right hand follower stud **166** on the U-shaped lever **158** contacts the cam track **208** on the lower cam plate **198**, and as the carriage continues to move toward the right said follower stud is moved in an upward direction by the cam track **208** until it reaches the end of said track, at which time it drops down, causing the platform carrying apparatus to rotate clockwise, as viewed in Fig. 4, bringing the next uppermost platform **40** into alignment with the upper edge of the sheet receiving container **34**, in much the same manner that the action of the uppermost cam track **196** causes rotation of the platform carrying drum **38** in the manner set forth above. Thus the platform carrying apparatus is caused to rotate a distance sufficient to bring the next uppermost platform into alignment with the upper edge of the sheet receiving container as the carriage **32** reaches the respective ends of said platforms.

It is pointed out that each of the cam plates **196** and **198** is pivotly mounted adjacent one of its ends so that when the carriage is reversed, just after the respective follower studs **166** and **168** on the U-shaped lever drop off the uppermost end of the respective cam tracks, said follower studs are allowed to pass freely beneath the cam track from which it has just dropped by camming said track upwardly about the respective pivots on the cam plates.

Operation

It is first pointed out that the trays **42** are numbered in the manner shown in Figs. 1 and 2, as for example from right to left 1, 2, 3, 4, with tray 5 being directly above tray 4, so that stacks of page 1, page 2, etc., may be placed in the respective trays so numbered. With tray 1 in the position shown, the carriage is moved to the extreme right hand position at which time the left hand edge of the container **34** is approximately in alignment with the right hand disc **138** on the drum **38**.

Rotation of the double lead screw **22** is then commenced, which through the interaction of the groove **44** in the lead screw **22** and the follower **50** causes the carriage to move toward the left, as viewed in Fig. 1. As the carriage moves toward the left, the rotary cam **60** with the groove **62** in its surface, is caused to rotate in a clockwise direction, as viewed from the righthand end thereof. Rotation of the cam **60**, together with movement of the carriage **32** brings the compartment

marked A into alignment with tray No. 1, at which time and by virtue of the relative proportions of the various elements, all as set forth above in detail, there is a period of dwell in movement of the container **34** relative to the platform **40** and tray No. 1, while the carriage **32** continues to move toward the left. At the same time, through interaction of the follower **92** and the groove **74** in the stationary double lead-screw **70**, the sprocket wheel **100** and thus the shaft **126** are caused to rotate, said rotation being continuous and being so timed that when compartment A is juxtaposed to tray No. 1 the feed fingers **132** opposite compartment A rotate into contact with the topmost sheet of paper in the tray No. 1, thereby feeding said sheet into compartment A.

As the first sheet in tray No. 1 is fed into compartment A, the rotary cam **60** proceeds to move from the position shown in Figs. 2, and 7–9, to the position shown in Fig. 1, at which time further rotation of said rotary cam causes the container **34** to be moved toward the left as the carriage likewise proceeds to move toward the left, but at a somewhat greater rate of speed until compartment A is in alignment with tray No. 2 and compartment B is in alignment with tray No. 1. At this time the rotary cam **60** has again reached the position shown in Figs. 2 and 7–9 thereby once again causing the slidable container **34** to dwell temporarily relative to the trays 1 and 2, as the carriage **32** continues to move toward the left. The dwell interval continues for a period of time long enough for the feed fingers **132** opposite compartments A and B to proceed to feed a single topmost sheet from tray No. 1 into compartment B, and a single sheet from tray No. 2 into the compartment A, thereby resulting in pages 1 and 2 being in compartment A and page 1 in compartment B. The aforementioned sequence of operations continues until the compartment D moves to the left of tray No. 4. It is pointed out that when the container **34** is being moved relative to the carriage **32**, the rotary shaft **104** slides through the bearing **102** and the bushing **110** while continuously rotating, due to the flattened portion on the shaft and the interior of the bushing **110**.

At about the time that the compartment D starts to move to the left of tray No. 4 the follower stud **168** at the left hand side of the U-shaped lever is cammed in an upward direction by the cam track **202** on the uppermost cam plate **196**. As the carriage **32** continues to move toward the left, the stud **168** and therefore the U-shaped lever **158** are moved upwardly toward the dotted line position shown in Fig. 4 until said stud reaches the upper edge of the cam track **202** and drops down from said surface. By virtue of the structural relationship between the finger **174** on the upwardly extending arm **172** and the rearwardly extending finger **176** on the rotary lever **178**, said rotary lever is rotated in a counterclockwise direction as the U-shaped lever rises to the dotted line position shown in Fig. 4. When the follower stud **168** drops free of the cam track **202**, the spring **184** causes clockwise rotation of the rotary lever **178**, thereby causing the pawl **180** to rotate the ratchet wheel **182** in a clockwise direction a number of degrees sufficient to bring the next platform **40** into alignment with the upper edge of the container **34** so that the trays 5, 6, 7 and 8 are in alignment with said container.

As the double lead screw **22** continues to rotate, the direction of movement of the carriage **32** is reversed as the follower **50** moves through the arc at the left hand end of the double lead screw **22** and enters the groove **45** and the carriage feeding process continues with the compartment D temporarily stopping in front of tray No. 5 so that a single page 5 may be fed into said compartment on top of pages 1–4 already contained therein. As the carriage **32** continues to move toward the right, the sheet feeding operations are repeated during the momentary periods of dwell on the part of the container in front of the respective trays, said dwell being brought about by virtue of the structural elements described above.

It is pointed out that as the carriage movement is reversed, the cam follower foot **94** on the arm **90** leaves the cam groove **74**, turns and enters the groove **72**, so that the direction of rotation of the sprocket wheel **100** and thus the feed fingers **132** remain the same even though the direction of carriage movement is reversed.

As the compartment A passes beyond the right hand side of the disc **138**, the cam plate **198** on the rear of the carriage **32** commences to cam the follower stud **166** in an upward direction thereby causing counterclockwise rotation of the U-shaped lever **158** (see Fig. 4). This of course causes rotation of the rotary lever **178** and movement of the pawl **180** to the dotted line position shown in Fig. 4 so that when the follower stud **166** drops over the upper edge of the cam track **208**, the downward movement of the U-shaped lever **158** allows the coil spring **184** to rotate the rotary lever **178** clockwise, thereby causing the pawl **180** to rotate the ratchet wheel **182** clockwise a sufficient distance to bring the third platform into alignment with the upper edge of the container **34**, at which time the carriage **32** is reversed and the aforementioned feeding steps are carried out from the trays 9, 10, 11 and 12.

The collating steps described in the paragraphs immediately above are of course repeated until the last page of a particular set has been fed into each of the compartments A thru D, at which time the apparatus may be stopped and the collated sheets removed from the compartments A thru D.

In the event that it is desired to collate more than one set of papers in each of the compartments A, B, C and D, the tray **42** following the one having the last page of a set therein is filled with colored, separation sheets adapted to be fed, one each, into the compartments A thru D after each compartment has a complete set of pages collected therein. The collating steps described above are then repeated and thus several sets of sequentially arranged pages may be collected in each compartment A–D, and subsequent separation of the sets expedited.

It is pointed out that the sheets in each of the trays **42** are prevented from sticking together by providing a beveled edge **214** at the front end of each of the trays **42**, whereby the stack of sheets in each tray is feathered. In addition each of the trays may be provided with side and end adjustment members **216** to conform to the machine size, with the end adjustment member **216** being at the same angle as the beveled portion **214** at the front of the tray.

It is emphasized that the combination of the flexible spring material ejector fingers **132**, the frictional members **134** thereon and the stack feathering members **214** and **216** eliminates the need for providing expensive pick-up suction cups and/or various other types of such devices now used in the prior art for the purposes of preventing the feeding of more than one sheet at a time. In addition the feeding fingers **132** by their very nature have a vibrating, breaking effect on the stack of sheets in each tray thereby eliminating the problem of static electricity which may keep the sheets stuck together. The spring ejector fingers **132** also eliminate the need for a vertical adjustment means in each of the trays, since said flexible fingers adjust themselves to the thickness of the stack in said tray. Feeding of a sheet from a tray **42** is further expedited by virtue of the beveled members **214** and **216**.

It should be understood that while the instant embodiment of the invention discloses only four receiver compartments A, B, C and D, and a corresponding number of trays **42** in each of the platforms **40**, the invention may be constructed so as to include a greater or lesser number of receiver compartments and trays, being limited only by the practical considerations of space and ex-

pense. For example, these could be four compartments A–D and eight trays **42** per platform **40**, or alternatively eight compartments A–H and eight trays **42** per platform **40**. Various other combinations within the scope of this invention will readily occur to those skilled in the art.

Thus the instant invention provides a foolproof collating apparatus that is adapted to collate a plurality of sheets of paper in such a manner that a plurality of sets of such sheets of paper may be collected substantially at one time, whereas most of the prior art devices are capable of collating only one set at a time. In addition the operation of the instant apparatus is substantially fully automatic once operation of the apparatus is commenced. It is also pointed out that an apparatus of the type described above will collate 200 sets of pages, 1 thru 39, plus one colored separation sheet, at an estimated 12,000 sheets per hour based on a one way carriage traveling time of 5 seconds, the size of said sheets being 8 inches by 13 inches. It is further pointed out that the capacity of the machine will depend largely only upon the size of the various compartments utilized and the speed of rotation of the double lead screw **22**.

It should be understood, of course that the foregoing disclosure relates only to a preferred embodiment of the invention and that numerous modifications or alterations may be made therein without departing from the spirit and scope of the invention as set forth in the appended claims.

What is claimed is:

1. A collating machine comprising, a framework, a rotary carrier mounted on the frame for rotation about a horizontal axis, a plurality of circumferentially spaced platforms mounted on said rotary carrier, means connected to said platforms to maintain them horizontal regardless of the rotary movement of the carrier; each of said platforms being divided into a plurality of paper receiving trays, a carriage slidably mounted on said frame and movable transversely of said rotary carrier, a driving means connected to said carriage for reciprocating said carriage along said framework in front of said rotary carrier; a container having a plurality of compartments therein, said container being movably mounted on said carriage, a driving means for reciprocating said container relative to said carriage while said carriage moves relative to said rotary carrier, said latter means being adapted to arrest movement of said container relative to said rotary carrier for a predetermined interval of time when at least one of the compartments in said container is in juxtaposed relation with one of the trays in said platform, means for feeding the topmost sheet of paper in each of said trays into a juxtaposed compartment in said container when said container momentarily pauses in its movement transversely of said rotary carrier; and a means for rotating said rotary carrier at predetermined intervals to bring a succeeding platform into juxtaposed relation with said container.

2. A collating machine as set forth in claim 1, wherein the carriage driving means comprises a rotary double lead-screw having two oppositely spiraled cam grooves formed in the surface thereof, and a cam-follower mounted on said carriage and selectively engaged in one of said grooves, said double lead-screw having a cam-follower direction reversing groove at the respective ends thereof, whereby said cam-follower is engaged in the other of said grooves, whereby motion of said carriage is automatically reversed at its extremities of movement while said double lead-screw continues to rotate in the same direction.

3. A collating machine comprising, a frame, a rotary carrier mounted on the frame for rotation about a horizontal axis, a plurality of circumferentially spaced platforms mounted on said rotary carrier, means connected to said platforms to maintain them horizontal regardless of the rotary movement of the rotary carrier, each of said platforms being divided into a plurality of trays each of which is adapted to hold a stack of sheets of paper, a container divided into a plurality of sheet receiving compartments each of which is at least as large as said trays, said container being movably mounted on said frame, driving means for moving said container on said frame transversely of said rotary carrier and along one edge of a juxtaposed platform, container arresting means adapted to stop movement thereof for a predetermined interval of time when at least one of said compartments is in juxtaposed position with a corresponding number of trays on said platform; and sheet feeding means adapted to feed the topmost sheet in each tray into a juxtaposed compartment in said container while said container is in stationary position before a tray, whereby the topmost sheet in each tray is adapted to be fed successively into each of said compartments thereby providing a number of sheets in each compartment equal to the number of trays in said platform.

4. A collating machine as set forth in claim 3, wherein said container driving means comprises a rotary cam mounted on said framework, said cam having a cam groove in the surface thereof and extending circumferentially thereof, and wherein said container is provided with a cam-follower having the end thereof located within said cam groove.

5. A collating machine comprising, a framework, a rotary carrier mounted on said framework for rotation about a horizontal axis, circumferentially spaced platforms mounted on said rotary carrier, means connected to said platforms to maintain them horizontal regardless of the rotary movement of the carrier; each of said platforms being sub-divided into a plurality of trays each of which is adapted to hold a stack of sheets of paper, a driving means for reciprocating said carriage transversely of said rotary carrier, said carriage being continuously movable relative to said framework and said carrier, a container slidably mounted on said carriage and movable relative thereto and relative to said carrier, said container being divided into a number of compartments equal in number and size to the trays in each platform, said container being movable into a position with its upper edge in juxtaposition with at least one of the trays in a platform, sheet feeding means for feeding the topmost sheet in each tray into a compartment in said container only when a compartment is in juxtaposition with a tray, a driving means for moving said container relative to said carriage, said driving means being adapted to arrest movement of said container relative to a platform when at least one of said compartments is in juxtaposition with at least one of said trays, whereby said feeding means may feed a topmost sheet from each tray that is juxtaposed to a compartment into said juxtaposed compartment, said driving means being adapted to move said container transversely of said platform a distance equal to the width of one of said trays and then arrest movement of said container until a sheet is fed from a next successive tray and those preceding trays into compartments in said basket that are in juxtaposition with said trays.

6. A collating machine comprising, a framework, a rotary carrier mounted on said framework for rotation about a horizontal axis, a plurality of circumferentially spaced platforms mounted on said rotary carrier, means connected to said platforms to maintain them horizontal regardless of the rotary motion of the carrier, each of said platforms being sub-divided into a plurality of trays each of which is adapted to contain a stack of sheets of paper, a carriage movably mounted on said framework, means for reciprocating said carriage transversely of said rotary carrier, said latter means being adapted to move said carriage alternately beyond the respective ends of said rotary carrier and then reverse the direction of movement thereof, a container slidably mounted on said carriage, said container being divided into a number

of sheet receiving compartments, driving means for reciprocating said container relative to said carriage, said compartments each being adapted to have its uppermost end juxtaposed with the upper edge of said platform and each of said compartments being of substantially the same size and shape as the trays in said platforms, a sheet feeding means adapted to frictionally engage and feed a topmost sheet from a tray into a compartment in said basket, means associated with said container driving means for periodically arresting movement of said container relative to said rotary carrier when at least one of the compartments is in alignment with a like number of trays in said platform, said feeding means being adapted to feed a topmost sheet from a tray into a compartment when said container is in motion arrested position, said motion arresting means being adapted to arrest motion of said container relative to said carrier each time a given compartment is in juxtaposed relation with successively arranged trays in a particular platform, whereby a plurality of sheets are adapted to be collected in a given compartment.

7. A collating machine as set forth in claim 6, wherein said container driving means comprises a rotary cam mounted on said framework, said cam having a cam groove in the surface thereof and extending circumferentially thereof, and wherein said container is provided with a cam-follower having the end thereof located within said cam groove.

8. A collating machine comprising a framework, a rotary carrier mounted on the framework for rotation about a horizontal axis, a plurality of circumferentially spaced platforms mounted on said rotary carrier, means connected to said platforms to maintain them horizontal regardless of the rotary motion of the rotary carrier, each of said platforms being sub-divided into a plurality of trays adapted to contain a stack of sheets of paper, a carriage movably mounted on said framework, means for continually reciprocating said carriage transversely of said rotary carrier, said latter means being adapted to move said carriage alternately beyond the respective ends of said rotary carrier, a container mounted on said carriage, said container being sub-divided into a number of compartments, driving means for reciprocating said container relative to said carriage, the compartments in said container each having its uppermost end adapted to be placed in juxtaposed relation with the upper edge of said platform, each of said compartments being of substantially the same size and shape as the trays in said platforms, a sheet feeding means adapted to frictionally engage and feed the topmost sheet from a tray into a compartment in said container, means associated with said driving means for periodically arresting movement of said container relative to said rotary carrier when at least one of the receptacles is in alignment with a like number of trays in said platform, said sheet feeding means being adapted to feed a topmost sheet from a tray into a compartment when said container is in motion arrested position, said motion arresting means being adapted to arrest motion of said container relative to said carriage each time a given compartment is in juxtaposed relation with successively arranged trays in a particular platform, motion reversing means adapted to reverse the direction of movement of said carriage relative to said rotary carrier after each compartment has received a sheet from each tray, and a simultaneously operable means adapted, upon movement of said container beyond a side end of said rotary carrier, for rotating said carrier about its axis a number of degrees sufficient to bring a succeeding platform into alignment with the uppermost edge of the container, whereby a sheet is adapted to be fed into each of said compartments from successively arranged trays in a succeeding platform, thereby resulting in the assemblage of a plurality of sheets in each of said compartments equal in number to the total number of trays on said rotary carrier.

9. A collating machine as set forth in claim 8 wherein said container driving means comprises a rotary cam mounted on said framework, said cam having a cam groove in the surface thereof and extending circumferentially thereof, and wherein said container is provided with a cam follower having the end thereof located within said cam groove.

10. A collating machine comprising, a framework, a rotary carrier mounted on the frame for rotation about a horizontal axis, a plurality of circumferentially spaced platforms mounted on said rotary carrier, means connected to said platforms to maintain them horizontal regardless of the rotary movement of the carrier; each of said platforms being divided into a plurality of paper receiving trays, a carriage slidably mounted on said frame and movable transversely of said rotary carrier, a driving means connected to said carriage for reciprocating said carriage along said framework in front of said rotary carrier; a container having a plurality of compartments therein, said container being movably mounted on said carriage, a driving means for reciprocating said container relative to said carriage while said carriage moves relative to said rotary carrier, said latter means comprising a stationary shaft having its opposite ends fixedly mounted on said framework, said shaft having a spiral groove formed in the surface thereof and extending substantially the length of the shaft, a cylindrical cam mounted on said stationary shaft and having a detent fixedly mounted within an axial hole formed therethrough and extending into the groove in said shaft, said cam being held against end-wise movement relative to said carriage between a pair of downwardly extending spaced brackets affixed to said carriage and having respectively a hole formed therethrough for said shaft to extend through, said cylindrical cam having a cam groove formed in the surface thereof, said container having a downwardly extending cam follower having an end portion located within the cam groove in said cylindrical cam, whereby reciprocating movement of said carriage causes rotary movement of said cylindrical cam thereby causing reciprocating movement of said container relative to said carriage by the interaction of the cam groove in said cylindrical cam and the downwardly extending cam follower on said carriage, the groove in the surface of said cylindrical cam being so proportioned as to cause momentary dwell of said container relative to said rotary carrier when at least one of the compartments in said container is in alignment with a like number of trays in said platform, means for feeding the topmost sheet of paper in each of said trays into a juxtaposed compartment in said container when said container momentarily pauses in its movement transversely of said rotary carrier; and a means for rotating said rotary carrier at predetermined intervals to bring a succeeding platform into juxtaposed relation with said container.

11. An article dispensing device comprising, a frame, a horizontal shaft rotatably mounted on said frame, a rotary carrier fixedly mounted on said shaft, a plurality of circumferentially spaced article-carrying platforms pivotally mounted on said rotary carrier, means connected to said platforms to maintain them horizontal regardless of rotary movement of the carrier; said latter means comprising a stud attached to each platform pivotally connecting each platform to said rotary carrier, a disc rotatable about a horizontal axis spaced from the axis of rotation of said rotary carrier, a plurality of levers, each lever having one end thereof fixedly connected to said stud and having its opposite end pivotally connected to said disc, the pivotal connections between the respective levers and the disc being equally spaced from the center of rotation of said disc and equally spaced about the periphery thereof, whereby said platforms are maintained horizontal as the rotary carrier and disc rotate about their respective horizontal axes.

12. An article dispensing apparatus comprising, a

frame, a horizontal shaft rotatably mounted on said frame, a rotary carrier fixedly mounted on said shaft, a plurality of circumferentially spaced article-carrying platforms, means connected to said platforms to maintain them horizontal regardless of rotary movement of the carrier, said latter means comprising a stud pivotly connecting each platform to said rotary carrier, a disc rotatable about a horizontal axis, said disc being rotatable about a horizontal axis spaced from the horizontal axis of rotation of said rotary carrier, a plurality of levers, each lever having one end thereof fixedly connected to said stud, and having its opposite end pivotly connected to said rotary disc, the pivotal connections between the respective levers and the rotary disc being equally spaced from the center of rotation of said disc and equally spaced about the periphery thereof, whereby said platforms are maintained horizontal as the rotary carrier rotates about its horizontal axis; an article receiving means mounted for reciprocatory movement transversely of said rotary carrier, said article receiving means comprising a movable carriage, means for moving said carriage continuously transversely and reciprocably of said carrier, an article receiving container mounted on said carriage, a driving means on said carriage for reciprocating said container relative to said carriage, the driving means for said container being adapted to arrest movement of said container relative to said rotary carrier at predetermined spaced intervals along each of the platforms on said carrier, means on said container for periodically feeding articles from a platform into said container, and means for periodically rotating said rotary carrier about its axis to bring succeeding article retaining platforms into a position whereby articles may be fed therefrom into said container.

13. An article receiving apparatus for use with an article dispensing apparatus, said article receiving apparatus comprising, a frame, an article retaining means, a carriage mounted on said frame, a driving means connected to said carriage for continually reciprocating said carriage on said frame transversely of said article retaining means, an article receiving container resiprocably mounted on said carriage, means associated with said carriage for reciprocating said container relative to said carriage, said latter means being adapted to periodically arrest movement of said container relative to said frame, and an article feeding means, said article feeding means being adapted to feed articles from said retaining means into said container while movement of said container is arrested relative to the frame.

14. An article receiving apparatus as set forth in claim 13 wherein, the carriage driving means comprises a double lead-screw having double spiral cam grooves formed in the surface thereof, said lead-screw rotating in the same direction at all times, a cam follower supporting means fixedly attached to said carriage, a cam groove follower attached to said cam follower supporting means and slidably mounted within one of the grooves in said double lead-screw, whereby rotation of said double lead-screw causes reciprocatory movement of said carriage; said container driving means comprising, a stationary single lead-screw having a single spiral cam groove formed in the surface thereof, a rotary cylindrical cam mounted on said single lead screw and having a cam follower fixedly attached thereto and slidably mounted within the groove in said single lead screw, said rotary cam having a cam groove formed in the surface thereof and extending circumferentially thereof, said rotary cam being rotatably mounted on said carriage, and a cam follower fixedly attached to said container and slidably mounted within the cam groove in the surface of said rotary cam, whereby movement of said carriage relative to said single lead screw causes rotation of said rotary cam and oscillation of said container relative to said carriage, the groove in said rotary cam being so proportioned as to cause momentary dwell of said container relative to said frame at predetermined intervals.

15. An apparatus for converting continuous linear motion to intermittent linear motion comprising, a base member, a carriage, a driving means for linearly moving said carriage relative to the base member, a container slidably mounted on said carriage, a lead screw fixedly mounted on said base member and extending parallel to the direction of movement of said carriage, said lead screw having a single spiral cam groove formed in the surface thereof, a cylindrical rotary cam mounted on said lead screw and having a cam follower in engagement with the cam groove in said lead screw, said rotary cam being rotatably mounted on said carriage and linearly movable therewith, whereby movement of said carriage relative to said lead screw causes rotation of said cylindrical cam, said cylindrical cam having a cam groove formed in the surface thereof and extending circumferentially thereof, said cam groove in the cylindrical cam being closed on itself and substantially elliptical in shape, a cam follower fixedly mounted on said container, said latter cam follower being in engagement with the cam groove in said cylindrical cam, whereby linear movement of said carriage causes reciprocating movement of said container relative to said carriage, said cam groove in the cylindrical cam being so proportioned as to cause momentary dwell of said container relative to said base member during continual linear movement of said carriage.

16. A means for translating linear reciprocating motion into intermittent rotary motion comprising a reciprocably mounted carriage, a driving means for reciprocating said carriage, a rotary carrier fixedly-mounted on a horizontal rotatable shaft for rotation about a horizontal axis, a pawl and ratchet drive means associated with said rotary carrier for imparting intermittent rotary motion thereto, a pawl and ratchet actuating means on said carriage adapted to actuate said pawl and ratchet as said carriage reaches its respective limits of movement so as to cause intermittent rotary movement of said carrier about its horizontal axis.

17. An apparatus for converting reciprocating motion to intermittent rotary motion comprising, a horizontal, rotatable shaft, a linearly movable carriage, a driving means for said carriage adapted to reciprocate said carriage through a fixed field of movement, a rotary member fixedly connected to said horizontal shaft, a ratchet wheel fixedly mounted on said horizontal shaft, a rotatable lever, a pawl connected to one end of said lever for engagement with said ratchet wheel, means, including a cam follower adjacent the respective limits of movement of said carriage, for intermittently rotating said rotary lever a distance sufficient to move said pawl from between one pair of teeth on the ratchet wheel to a space between an adjacent pair of teeth, a pair of oppositely inclined cam tracks on said carriage, said cam tracks being adapted respectively to engage said cam followers as said carriage reaches its respective limits of reciprocal travel, whereby actuation of said cam followers causes rotary movement of said rotary lever and thereby movement of said pawl relative to said ratchet wheel in the aforementioned manner, said cam followers being adapted to move free of the respective cam tracks after a predetermined angular movement of said rotary lever, and a means for restoring said rotary lever to its normal position after said cam followers move free of the respective cam tracks, whereby said pawl causes said ratchet wheel and therefore said rotary member to be rotated a predetermined number of degrees.

18. An apparatus for translating reciprocatory movement into continuous, unidirectional rotary movement comprising, a reciprocably mounted carriage, a driving means for reciprocating said carriage, a fixedly mounted double lead-screw extending parallel to the direction of movement of said carriage, said lead-screw having oppo-

sitely spiralled cam grooves formed in the surface thereof, a rotary member mounted on said carriage, a cam follower fixedly connected to said rotary member, said cam follower having a portion thereof engaged in one of the cam grooves in the lead-screw, means at the respective ends of said lead-screw for moving said cam follower from a cam groove spiralled in one direction into the cam groove spiralled in the opposite direction, whereby said rotary member continues to rotate in the same direction when the direction of movement of said carriage is reversed.

19. A collating machine comprising, a frame, a rotary carrier mounted on the frame for rotation about a horizontal axis, a plurality of circumferentially spaced platforms mounted on said rotary carrier, each of said platforms being divided into a plurality of paper receiving trays, a carriage slidably mounted on said frame and movable transversely of said rotary carrier, a driving means connected to said carriage for reciprocating said carriage along said frame in front of said rotary carrier; a container having a plurality of compartments therein, said container being movably mounted on said carriage, a driving means for reciprocating said container relative to said carriage while said carriage moves relative to said rotary carrier, said latter means being adapted to arrest movement of said container relative to said rotary carrier for a predetermined interval of time when at least one of the compartments in said container is in juxtaposed relation with one of the trays in said platform, means for feeding the topmost sheet of paper in each of said trays into a juxtaposed compartment in said container when said container momentarily pauses in its movement transversely of said rotary carrier; and a means for rotating said rotary carrier at predetermined intervals to bring a succeeding platform into juxtaposed relation with said container.

20. A collating machine comprising, a frame, a rotary carrier mounted on the frame for rotation about a horizontal axis, a plurality of circumferentially spaced platforms mounted on said rotary carrier, each of said platforms being divided into a plurality of trays each of which is adapted to hold a stack of sheets of paper, a container divided into a plurality of sheet receiving compartments each of which is at least as large as said trays, said container being movably mounted on said frame,

driving means for moving said container on said frame transversely of said rotary carrier and along one edge of a juxtaposed platform, container arresting means adapted to stop movement thereof for a predetermined interval of time when at least one of said compartments is in juxtaposed position with a corresponding number of trays on said platform; and sheet feeding means adapted to feed the topmost sheet in each tray into a juxtaposed compartment in said container while said container is in stationary position before a tray, whereby the topmost sheet in each tray is adapted to be fed successively into each of said compartments thereby providing a number of sheets in each compartment equal to the number of trays in said platform.

21. A collating machine as set forth in claim 4 wherein, said cam groove is closed on itself and extends from one end of said cam to the opposite end of said cam, the portions of said groove at said opposite ends of the cam being at diametrically opposed sides of said cam.

22. A collating machine as set forth in claim 7 wherein, said cam groove is closed on itself and extends from one end of said cam to the opposite end of said cam, the portions of said groove at said opposite ends of the cam being at diametrically opposed sides of said cam.

23. An article receiving apparatus as set forth in claim 14 wherein, said cam groove is closed on itself and extends from one end of said cam to the opposite end of said cam, the portions of said groove at said opposite ends of the cam being at diametrically opposed sides of said cam.

24. An apparatus for translating reciprocatory movement into continuous, unidirectional rotary movement as set forth in claim 18 wherein, the rotary member surrounds the fixed double lead screw, and said cam follower comprises, a rod having one end affixed to said rotary member and extending substantially at right angles thereto, a rotatable cam follower element extending into one of the grooves in said double lead screw and being rotatably mounted on the free end of said rod, the portion of said follower element mounted within said groove comprising an arm extending substantially at right angles to the axis of rotation of the follower element.

No references cited.