No. 886,886. PATENTED MAY 5, 1908.

R. J. STEINER.

KNIT FABRIC AND METHOD OF MAKING SAME.

APPLICATION FILED OCT. 22, 1906.

Fig. 1,

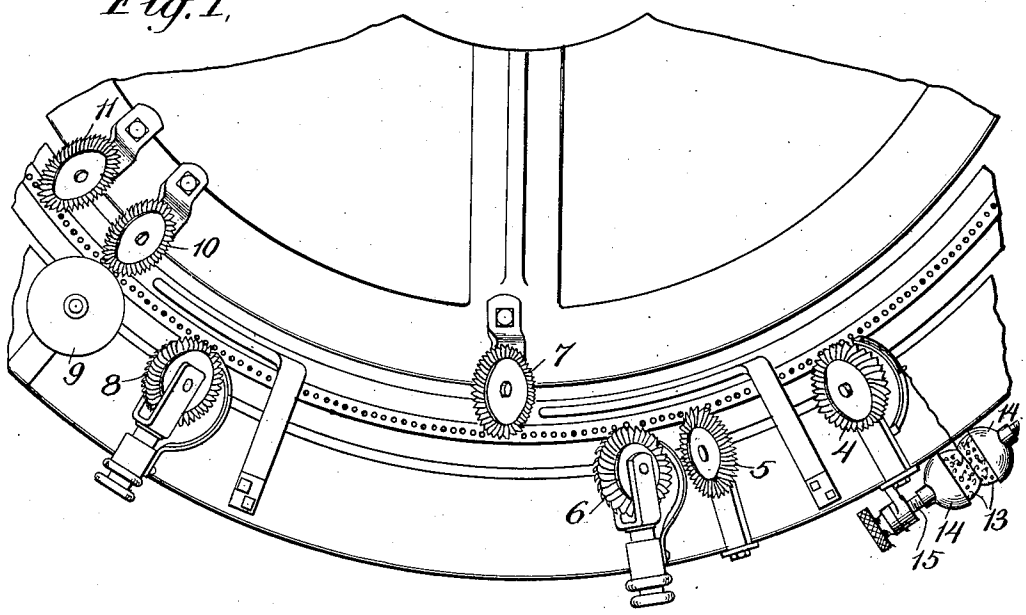

Fig. 2,

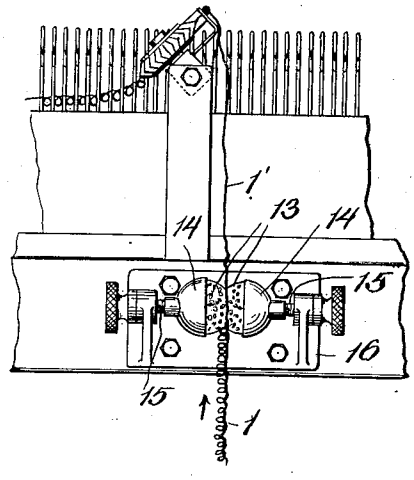

Fig. 3,



Fig. 4



Fig. 5,



WITNESSES:

M. E. McNinch

G. V. Gilmore

INVENTOR

Richard J. Steiner

BY

Mastick & Jones

HIS ATTORNEYS

UNITED STATES PATENT OFFICE.

RICHARD J. STEINER, OF BRIDGEPORT, CONNECTICUT, ASSIGNOR TO THE SALT'S TEXTILE MANUFACTURING COMPANY, OF BRIDGEPORT, CONNECTICUT, A CORPORATION OF CONNECTICUT.

KNIT FABRIC AND METHOD OF MAKING SAME.

No. 886,886. Specification of Letters Patent. Patented May 5, 1908.

Application filed October 22, 1906. Serial No. 339,971.

To all whom it may concern:

Be it known that I, RICHARD J. STEINER, a citizen of the United States, residing at Bridgeport, in the county of Fairfield and State of Connecticut, have invented certain new and useful Improvements in Knit Fabrics and Methods of Making the Same, of which the following is a specification.

The present invention relates to a knit fabric having back and face yarns the latter being united to the former at intervals by a tying-in yarn. The face yarn is curled prior to the knitting operation so as to produce by the knitting operation itself a fabric having a mass of closely and uniformly disposed rings or curls over its entire face.

The invention will be understood by the following description taken in connection with the accompanying drawings in which Figure 1 is a plan view of a portion of a knitting cylinder employed in the manufacture of the fabric; Fig. 2 a side view of a portion of said cylinder to illustrate the manner of introducing the face yarn, the needles being spaced apart for the sake of clearness; Fig. 3 a view of the face yarn as it comes from the curling machine; Fig. 4 a face view of the finished fabric; and Fig. 5 a section thereof.

Similar reference numerals indicate similar parts in the several views.

The fabric herein described comprises a face yarn 1 preferably of mohair or worsted, a back yarn 2 preferably of worsted or cotton, and a tying-in yarn 3 preferably of cotton. In the manufacture of this fabric I may employ any well-known type of knitting machine, that illustrated being a circular machine which may be of any desired diameter and number of feeds, and of suitable gage.

In the drawings one feed is shown comprising a backing wheel 4 which may be blocked as desired, preferably two and two, so as to stagger alternate pairs of needles; a clearing wheel 5; a plain wheel 6 for the tying-in yarn; a landing wheel 7; a plain wheel 8 for the back yarn; a plain presser wheel 9; a landing wheel 10; and a throw-off wheel 11. These several wheels are of known construction and each performs its usual and well understood function.

In addition to the parts above described the cylinder will be provided with the usual horns and other elements necessary to carry out the knitting operation.

In making the present fabric I proceed as follows. The yarn which is to constitute the face is first run through a curling machine to produce a yarn having a succession of substantially uniform rings, curls or loops as indicated, for example, in Fig. 3, the rings or curls being regular in form and closely disposed. The degree of the curl may vary, the essential feature being that the face yarn shall be curled in a certain manner as to produce the desired effect for the face of the fabric; that is, the finished fabric shall present on its face a close, compact mass of rings or curls. It is impossible for the above described curled yarn in its normal condition to pass through the backing wheel and in order that the said yarn may be properly placed upon the needles it is necessary that it be straightened, and for such purpose I employ any form of tension device suitable to the yarn and the conditions obtaining in the knitting operation. The tension device preferred by me comprises two sponges 13 supported in cups 14, said cups being carried upon threaded studs 15 adjustable in brackets on a base 16, the latter being secured to the machine frame in proximity to the backing wheel. The sponges 10 are saturated more or less with some suitable oil such as olive oil, and are so adjusted relatively to each other that as the curled yarn is drawn between them the drag or tension placed thereon will be sufficient to straighten the yarn as indicated by the portion 1' in Fig. 2. The yarn is thus made practically straight between the tension device and the backing wheel 4, but as soon as it leaves the latter the normal curled condition is resumed. The presence of the rings or curls in the face yarn after being placed on the needles does not interfere with the subsequent stages of the knitting operation, the said yarn being acted upon by the several wheels of the feed called into play after being placed upon the needles, and bound to the back yarn 2 by the tying-in yarn 3, in the usual manner for a straight yarn.

I am aware that previous to my invention a knit fabric has been made in which the face yarn as it appears in the fabric on the knitting cylinder has a wavy appearance, the front and back yarns being of different materials in order that the back yarn may shrink, while the face yarn does not, certain

finishing operations being relied upon to give more or less curl to the face yarn. In making that fabric the face yarn is not curled previously to the knitting operation so that in the finished fabric the rings or curls are in a more or less incomplete condition and not uniformly or evenly distributed, open spaces of greater or less extent exposing the back. By curling the face yarn prior to the knitting operation I obtain a fabric on the knitting cylinder in which the curls are of substantially uniform height, approximately regular in form, and so close together that the back is not materially exposed. After removal from the knitting cylinders the fabric is put through the finishing operations of dyeing, washing, singeing, and shearing, but these operations are not relied upon to produce the curled face effect of the fabric. A very distinct and important advantage results from the use of a previously curled yarn in that the rings or curls become set in the yarn prior to the knitting operation and are thus not liable to uncurl or assume an abnormal condition in the finished fabric. The present fabric, therefore, differs materially from previous fabrics both in the method of manufacture, and the appearance of the finished goods.

While I have specified certain kinds of yarns I do not wish to be limited thereto, nor to any particular type of knitting machine provided it is equipped with the requisite feeds and needles to produce the described fabric. On the contrary, believing myself to be the first to make knit fabric by first curling and setting the face yarn to the described form and condition, then straightening the yarn so that it may be properly placed upon the needles, and then permitting the yarn to resume its normal condition on the needles, I desire to claim the same broadly without reference to specific mechanisms for accomplishing the result.

What I claim and desire to secure by Letters Patent is:—

1. A knitted fabric consisting of a back, and an artificially curled face yarn knitted thereto said face yarn being curled to the condition it assumes in the fabric previous to the knitting operation.

2. A knitted fabric consisting of back and tying-in yarns, and an artificially curled face yarn having a succession of substantially regular and closely disposed rings, curls or loops formed therein previous to the knitting operation, said face yarn being bound to the back by the tying-in yarn.

3. The method of making a knit fabric, said method consisting in so curling the face yarn previous to the knitting operation that it will assume, when knitted into a fabric, desired forms of rings or curls, straightening the curled yarn while the same is being placed upon the needles, and permitting the said yarn to resume its curled condition after being so placed.

4. The method of making a knit fabric comprising face and back yarns, said method consisting in so curling one of said yarns previous to the knitting operation that the same assumes, when knitted into a fabric, desired forms of rings or curls, straightening the curled yarn while the same is being placed upon the needles, and permitting said yarn to resume its curled condition after being so placed.

5. The method of making a knit fabric comprising face and back yarns, said method consisting in so curling the face yarn that it will assume in the fabric when knitted desired rings or curls, straightening said curled yarn before the same reaches the backing wheel, and permitting it to assume its curled condition after leaving said wheel.

6. The method of making a knit fabric comprising face and back yarns, said method consisting in so curling the face yarn that it will assume in the fabric when knitted desired rings or curls, feeding said face yarn to the backing wheel under sufficient tension to remove the curl therefrom, and permitting said yarn to assume its curled condition after leaving said wheel.

In testimony whereof I have hereunto signed my name in the presence of two subscribing witnesses.

RICHARD J. STEINER.

Witnesses:
ALFRED HOLROYD,
ARTHUR OAKLEY.