Feb. 24, 1959 C W. MUSSER 2,874,614

RECOILLESS GUN HAVING RADIALLY MOVABLE BREECH SECTORS

Original Filed Feb. 11, 1952 2 Sheets-Sheet 1

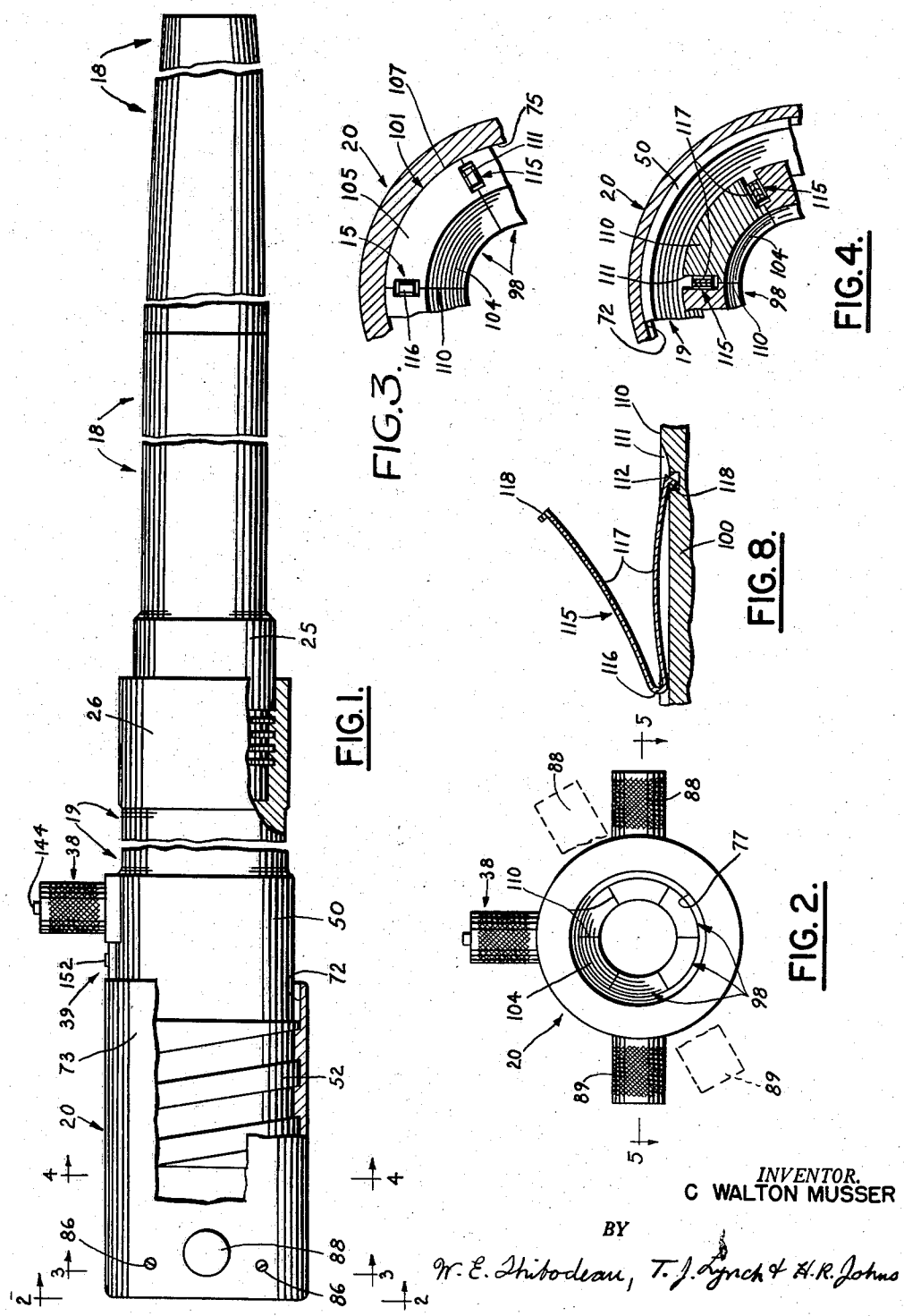

INVENTOR.
C WALTON MUSSER

BY

W. E. Thibodeau, T. J. Lynch & H. R. Johns

RECOILLESS GUN HAVING RADIALLY MOVABLE BREECH SECTORS

Original Filed Feb. 11, 1952 2 Sheets-Sheet 2

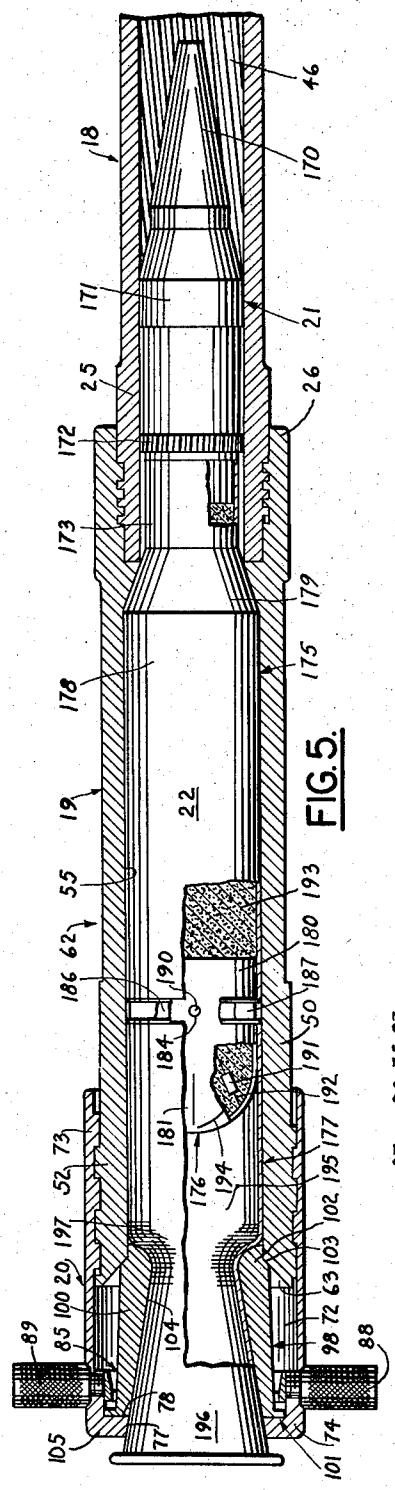

FIG. 5.

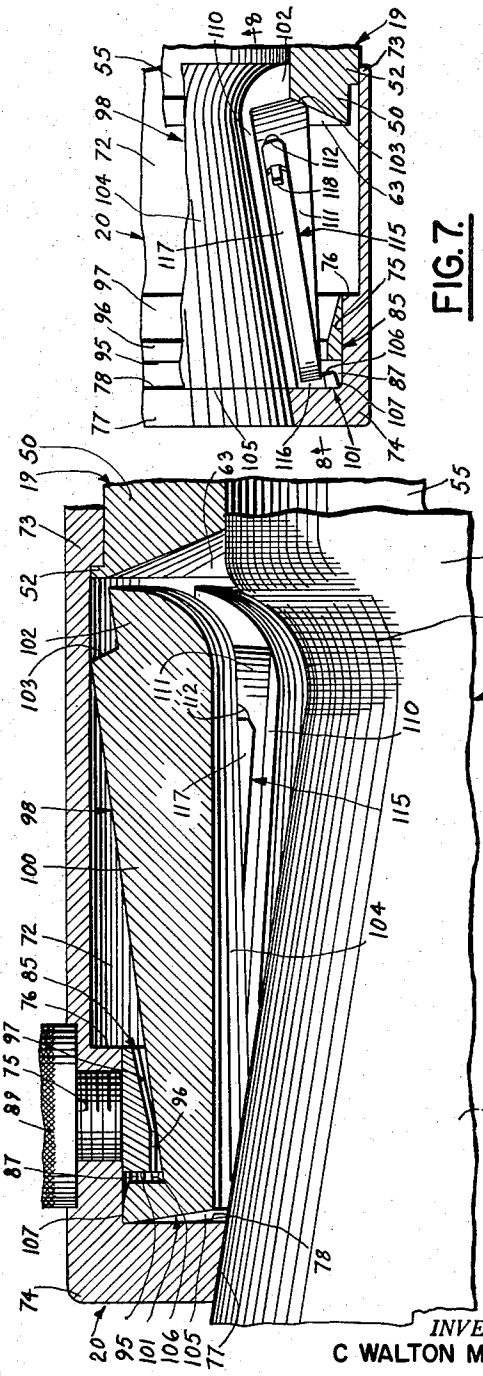

FIG. 6.

FIG. 7.

INVENTOR.
C WALTON MUSSER
BY
W. E. Thibodeau, T. J. Lynch & H. R. Johns

United States Patent Office

2,874,614

Patented Feb. 24, 1959

1

2,874,614

RECOILLESS GUN HAVING RADIALLY MOVABLE BREECH SECTORS

C Walton Musser, Beverly, Mass., assignor to the United States of America as represented by the Secretary of the Army

Original application February 11, 1952, Serial No. 271,056, now Patent No. 2,791,961, dated May 14, 1957. Divided and this application January 14, 1957, Serial No. 634,128

3 Claims. (Cl. 89—1.7)

(Granted under Title 35, U. S. Code (1952), sec. 266)

The invention described herein may be manufactured and used by or for the Government for governmental purposes without the payment of any royalty thereon.

This is a divisional application originating from U. S. patent application Serial No. 271,056 filed February 11, 1952, for "Recoilless Type Ammunition Having Self-Contained Venturi," in my name and issued May 14, 1957 as Patent 2,791,961.

The invention herein relates to recoilless guns and has for a prime object the provision of such a gun having a longer useful life than has heretofore been possible. This object is accomplished by constructing the gun so as to include a plurality of radially movable sectors, which sectors define a venturi opening and encircle a similarly shaped portion of the ammunition round preferably used in the gun so that, when the ammunition is fired, most of the gas generated is conducted to the exterior of the gun without coming into direct contact with the gun.

The following description and the accompanying drawings pertain to the construction and operation of one embodiment of the invention.

In the drawings:

Fig. 1 is a side view of the gun, partly in section and partly broken away;

Fig. 2 is a view taken along line 2—2 of Fig. 1 and looking in the direction there indicated;

Fig. 3 is a representative portion of a cross section taken along line 3—3 of Fig. 1;

Fig. 4 is a representative portion of a cross section taken along line 4—4 of Fig. 1;

Fig. 5 is a cross section taken along line 5—5 of Fig. 2. For completeness of illustration, an ammunition round of the type preferably usable in the gun is shown in firing position within the gun and is shown partly broken away and party in section;

Fig. 6 is an enlargement of a corresponding portion (i. e., the upper left hand portion) of Fig. 5, but showing certain components of the gun and of the ammunition round in different positions, respectively, from the positions shown in Fig. 5;

Fig. 7 is a section taken along line 7—7 of Fig. 2; and,

Fig. 8 is a section taken along line 8—8 of Fig. 7.

CONSTRUCTION OF THE GUN

The gun of the present invention comprises, as basic structural components, a barrel **18** (Figs. 1 and 5) a chamber **19** (Figs. 1 and 4 through 7) and a cap **20** (Figs. 1 through 7). The essential details of the just-named components follow and other components complementary thereto are identified and described as appears necessary.

Barrel **18** has the externally threaded rear or breech end **25** (Figs. 1 and 5) and the bore **46** (Fig. 5).

Chamber **19** has an internally threaded forward or muzzle end **26** (Figs. 1 and 5) and a rear end **50** (Figs. 1 and 4 through 7); the rear end having the external thread **52** (Figs. 1 and 5 through 7). Internally, chamber **19** has an ammunition opening **55** (Figs. 5 through 7) and a tapered face **63**.

2

As evident in Figs. 1 and 5, chamber **19** is joined to barrel **18**; the barrel's externally threaded rear end **25** being accommodated by the chamber's internally threaded forward end **26** and the chamber's ammunition opening being coaxial with the barrel's bore **46**.

Also on chamber **19** are a firing mechanism **38** (Figs. 1 and 2) by which the gun is fired and a safety mechanism **39** (Fig. 1) by which accidental operation of the firing mechanism is prevented.

Cap **20** has an internally threaded recess **72** (Figs. 1 and 4 through 7) which extends from that cap's forward end **73** (Figs. 1 and 5 through 7) almost to its rear end **74**, a recess **75** (Figs. 3, 6 and 7) which originates from the floor **76** (Figs. 6 and 7) of recess **72** and extends closer to the cap's rear end and a tapered opening **77** (Figs. 2 and 5 through 7) which issues from the floor **78** (Figs. 5 through 7) of recess **75** and extends to the cap's rear face.

Cap **20** fits on chamber **19**; the cap's internally threaded forward end **73** fitting over the chamber's externally threaded rear end **50**. It is understandable, therefore, that rotation of the cap relative to the chamber will result in the cap's movement in a direction along the chamber's axis.

In the operation of the gun, cap **20** is rotatable on chamber **19** to either one of two positions through the agency of the handles **88** and **89** (Figs. 1, 2 and 5) on that cap: a closed position shown in Figs. 1 through 5 and 7, in which the cap is at the limit of its travel toward the right with respect to the chamber's rear end **50**; or an open position shown in Fig. 6, in which the cap is at the limit of its travel toward the left with respect to the chamber's rear end **50**. More will be said about these positions later, when the operation of the gun is explained.

Inside cap **20** are a retaining ring **85** (Figs. 5 through 7), a plurality of breech sectors **98** (Figs. 2 through 7) and a plurality of V-shaped springs **115** (Figs. 3, 4 and 6 through 8); the ring being attached to the cap, as by the screws **86** (Fig. 1).

Ring **85** has a rear face **95** (Figs. 6 and 7) and a cylindrical opening **96**, which opening has a tapered portion **97**. As also shown in Figs. 6 and 7, ring **85** is accommodated in recess **75** of cap **20** so that a space **87** exists between that recess' floor **78** and that ring's rear face **95**.

Breech sectors **98** are substantially identical to each other. Therefore, a description of one sector will suffice for all sectors. Each sector has a body portion **100** (Figs. 4 through 6 and 8), a flanged, rear end **101** (Figs. 3 and 5 through 7), a stepped-in forward end **102** (Figs. 5 through 7), a tapered shoulder **103** (Figs. 5 through 7), a tapered, arcuate surface **104** (Figs. 2 through 7), a rear face **105** (Figs. 3 and 5 through 7), a forward face **106** (Figs. 6 and 7), a crowned arcuate rim **107** (Figs. 3, 6 and 7), the radially extending faces **110** (Figs. 2 through 4, 6 and 7) and a recess **111** (Figs. 3, 4 and 6 through 8) in each radial face.

Breech sectors **98** are disposed side by side in cap **20**, as can be understood from Figs. 2 through 7; the sectors' flanged ends **101** being accommodated in the cap's recess **75** and the sectors' stepped-in ends extending into the cap's recess **72**.

During operation of the gun, breech sectors **98** are made to assume simultaneously either one of two positions; a closed position shown in Figs. 1 through 5 and 7, or an open position shown in Fig. 6. These positions will be explained later, when the gun's operation is described.

V-shaped springs **115** are substantially identical to each other. Therefore, a description of one such spring will suffice for all springs. Each V-shaped spring has a crotch **116** (Figs. 3, 7 and 8), the legs **117** (Figs. 4 and 6 through 8) and a tab **118** (Figs. 7 and 8) on each leg; the legs tending constantly to spread apart from each other to the position indicated in Fig. 8.

There is one such spring between adjacent sectors **98**; each spring being accommodated in the sectors' recessed portions **111**, as shown in Figs. 3, 4, 6 and 7; and each of the springs' tabs **118** being accommodated in a recess **112** (Figs. 6 through 8) formed in the breech sectors.

OPERATION OF THE GUN

In describing the gun's operation, the matters of loading, firing and reloading the gun will be explained in succession. However, before such explanation, it appears necessary, in order to facilitate a full understanding of the gun's operation, to describe briefly the ammunition round **62** (Fig. 5) which is representative of the type preferably, but not exclusively, used in conjunction with the gun of the present application.

As earlier stated herein, such ammunition round is the subject of United States patent application Serial No. 271,056 filed February 11, 1952, for "Recoilless Type Ammunition Having Self-Contained Venturi," in my name. Therefore, only such details of the ammunition round as seem necessary to supplement the description of the gun appear to be necessary here.

Ammunition round **62** comprises, as basic structural components, a projectile **21** (Fig. 5) and a cartridge case **22**.

Projectile **21** has a nose **170** (Fig. 5), a bourrelet **171** and a pre-engraved rotating band **172**; such band, of course, not being required, if the projectile is to be fired from a smooth bored gun barrel.

Cartridge case **22** is made up of front, intermediate and rear members **175** (Fig. 5), **176** (Fig. 5) and **177** (Figs. 5 and 6), respectively.

The cartridge case's front member **175** has a neck **173** (Fig. 5), a tubular portion **178** and a tapered shoulder **179**; the case's neck being joined releasably, in convenient manner, to the rear end of projectile **21**.

The cartridge case's intermediate member **176** is cup-like and has an open end **180** (Fig. 5) and a spherical end **181**, which end is closed, except for the radially extending slits **194**. Additionally, intermediate member **176** has an electrically insulating bushing **184** which extends through the intermediate member's wall, an electrically insulating ring **186** which encircles the intermediate member, an electrical contact ring **187** which is imbedded in insulating ring **186**, an electricity conducting wire **190** which extends through bushing **184**, through ring **186** and is connected for conduction of electricity to ring **187**, an electrically operable detonator **191** at the other end of wire **190**, and an electricity conducting wire **192** which is connected to detonator **191** and to the intermediate member's wall.

As shown in Fig. 5, the intermediate member's open end **180** fits into front member **175**, those parts being joined together in any convenient manner; and the intermediate member and the front member contain a propellant **193**.

The cartridge case's rear member **177** has a tubular portion **195** (Figs. 5 and 6) and a venturi portion **196**, which portion has the throat **197**; the rear member being joined, in convenient manner, to intermediate member **176**.

Loading the gun

Before the gun can be loaded, cap **20** and breech sectors **98** must be in the open position shown in Fig. 6; the cap then being at the limit of its travel toward the left with respect to rear end **50** of chamber **19**, the breech sectors being diverged to their fullest extend radially with respect to the chamber's axis, and the sectors' arcuate surfaces **104** defining an opening large enough to allow for passage of the ammunition round into the gun. Therefore, in describing the loading of the gun, it is assumed that the just-stated conditions prevail.

Thereupon, ammunition round **62** is thrust, projectile **21** foremost, axially into the gun, as far as possible, through the breech cap's tapered opening **77**; the projectile's rotating band **172** being caused, by well-known means, to register with the rifling in the barrel's bore **46**, as indicated in Fig. 5; and the ammunition round's venturi portion **196** abutting the breech cap's tapered opening **77**, as shown in Fig. 6, which abutment limits, for the time, insertion of the ammunition round into the gun. However, that round is not yet fully inserted and seated in firing position in the gun; such insertion and seating occurring later, as will be explained, when the cap and the breech sectors are moved to their closed positions.

Then cap **20** is rotated on chamber **19** to the closed position shown in Figs. 1, 5 and 7. During such rotation, the cap travels axially toward the chamber's rear end **50**. As this happens, the cap's annular shoulder **78** abuts the breech sectors' faces **105** so that those sectors are pushed toward the chamber's rear end. In due time, the sectors' forward ends **102** move against the chamber's tapered face **63**. Consequently, the sectors are simultaneously converged toward the ammunition round's venturi **196** to their closed position against the resistance of V-shaped springs **115**. As the sectors are so converged, their arcuate surfaces **104** abut the ammunition round's venturi **196** so that the ammunition round is fully inserted and seated, ready for firing, in the chamber's ammunition opening **55**, as shown in Fig. 5; the cartridge case's shoulder **179** abutting and being supported by a similar shoulder in ammunition opening **55**, the case's tubular portions **178** and **195** also abutting and being supported by another part of the ammunition opening, and the breech sectors abutting and supporting the cartridge case's venturi **196**, which venturi acts as a liner for the breech sectors.

In other words, when breech cap **20** and breech sectors **98** in their fully closed position (Fig. 5), practically the entire circumferential surface of the ammunition round's cartridge case **22** is firmly supported by the gun's barrel **18**, chamber **19**, breech sectors **98** and tapered opening **77**, collectively. Furthermore, the gun's sectors **98** are in position to act as a breech block to prevent rearward displacement of the cartridge case when the gun is later fired; the sector's stepped-in ends **102** fitting inside ammunition chamber **55**, the sectors' tapered shoulders **103** abutting the chamber's face **63**, the sectors' flanged ends **101** being accommodated in the cap's recess **75**, and the sectors' faces **105** being in the abutment with the cap's shoulder **78**.

Firing the gun

To enable the gun to be fired, safety mechanism **39** (Fig. 1) is moved manually to its firing position (not shown) through the agency of a button **152** which forms part of that mechanism.

Then a trigger button **144** (Fig. 1) is depressed; this button forming a part of firing mechanism **38**. Such action moves a firing pin (not shown) in the gun into contact with the ammunition round's contact ring **187** and, in so doing, closes an electrical circuit (not shown) through the round's detonator **191**. Whereupon, that detonator, then propellant **193** are ignited.

Gas pressure generated in consequence of the ignition of propellant **193** shoots projectile **21** from the gun and blows open spherical end **181** of the cartridge case's intermediate member **176** along slits **194**. Then most of that gas, which is very hot and usually highly corrosive and erosive, flows forcefully at high velocity through the cartridge case's rear member **177**, past that member's throat **197**, to the exterior of the gun without coming into direct contact with any of the gun's components along the way. Thus, the gun's useful life is prolonged in comparison to the life expectancy of recoilless guns used heretofore.

Reloading the gun

To reload the gun, cap **20** is rotated to the open position, shown in Fig. 6, through the agency of handles **88** and **89**. During such rotation, the cap travels axially

away from the chamber's rear end **50**. As this happens, safety mechanism **39** is automatically restored to its safe position, cartridge case **22** remaining in the gun from the previously fired ammunition round is partially extracted from ammunition opening **55** because of the abutment between the cap's tapered opening **77** and the cartridge case's venturi portion **196**, and face **95** of retaining ring **85** in the cap abuts the sectors' faces **106** so that those sectors are moved away from the chamber's rear end. When the sectors' ends **102** are clear of the chamber's ammunition opening **55**, the sectors are simultaneously diverged radially away from the cartridge case's venturi **196** to their fully open position by V shaped springs **115**. Then the cartridge case is fully extracted from the gun by hand, another round is inserted into the gun, as explained earlier herein, and cap **20** is rotated to the closed position, as also explained earlier herein.

SUMMARY

From the foregoing, it is evident that I have provided a recoilless gun having a longer useful life than has heretofore been possible.

I claim:

1. In a recoilless gun having a barrel, an ammunition receiving chamber and means for firing ammunition in

said chamber, the combination therewith of: a plurality of breech sectors disposed at the rear end of the chamber concentrically with respect to that chamber and defining a venturi opening, said sectors being simultaneously divergable radially with respect to the chamber; means for supporting said sectors with respect to the chamber; and means for simultaneously moving said sectors radially with respect to the chamber to provide for passage of the ammunition and for securing that round in the chamber.

2. The combination defined in claim 1 plus resilient means disposed between adjacent breech sectors, said means tending constantly to diverge the breech sectors radially away from the chamber's axis simultaneously.

3. The combination defined in claim 2 wherein the resilient means is a plurality of V shaped springs, one of said springs being disposed between adjacent breech sectors.

References Cited in the file of this patent

UNITED STATES PATENTS

1,108,717	Davis	Aug. 25, 1914
1,450,558	Maze et al.	Apr. 3, 1923
2,454,276	Davis	Nov. 23, 1948
2,492,279	Fowler	Dec. 27, 1949