Jan. 18, 1955 S. C. MOON 2,699,966

UNDERGROUND MINE APPARATUS AND CONTROL HOUSING THEREFOR

Original Filed Feb. 16, 1945 2 Sheets-Sheet 1

Fig. 1

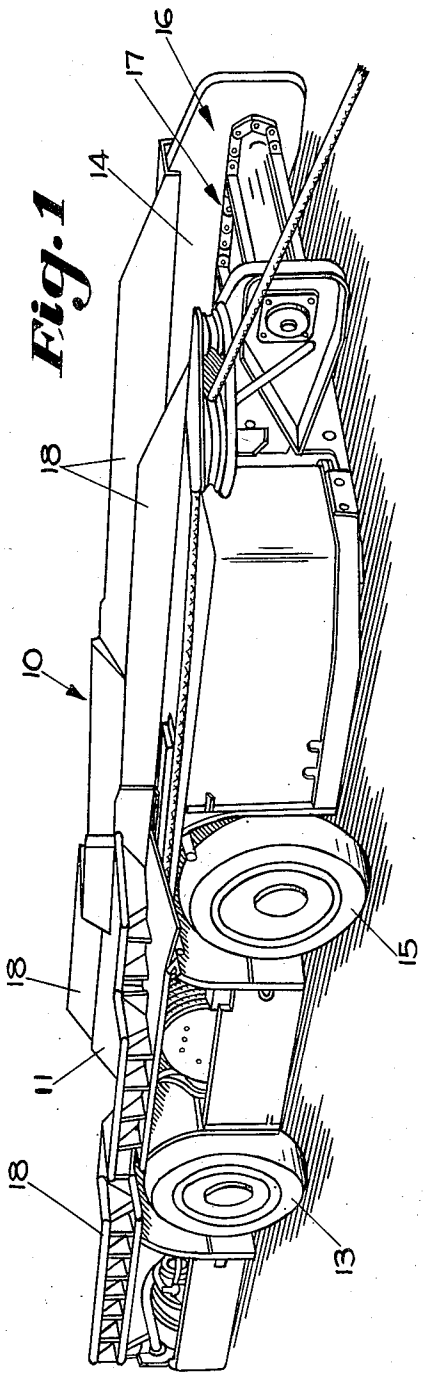

Fig. 2

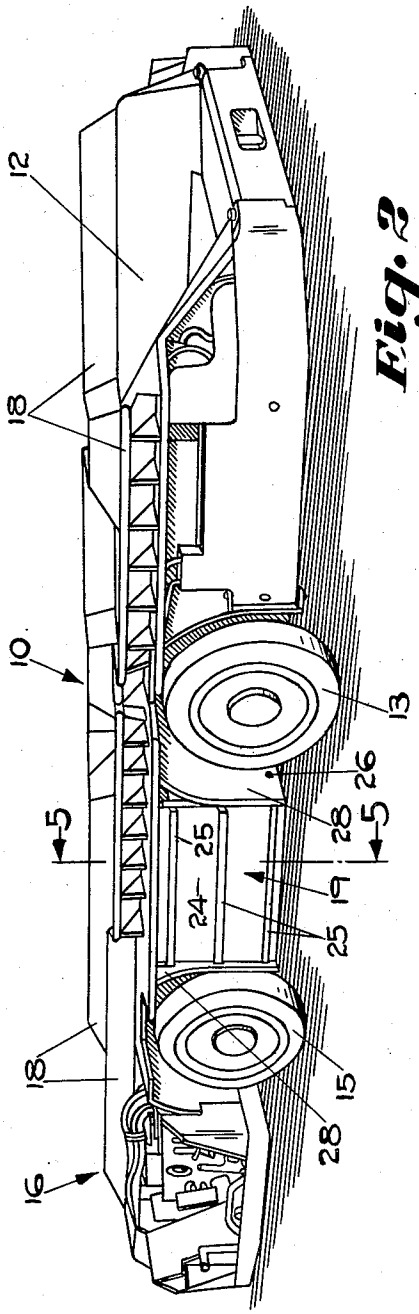

INVENTOR;
STERLING C. MOON,
BY
Charles W. Hutton,
ATT'Y

Jan. 18, 1955 S. C. MOON 2,699,966

UNDERGROUND MINE APPARATUS AND CONTROL HOUSING THEREFOR

Original Filed Feb. 16, 1945 2 Sheets-Sheet 2

Fig. 4

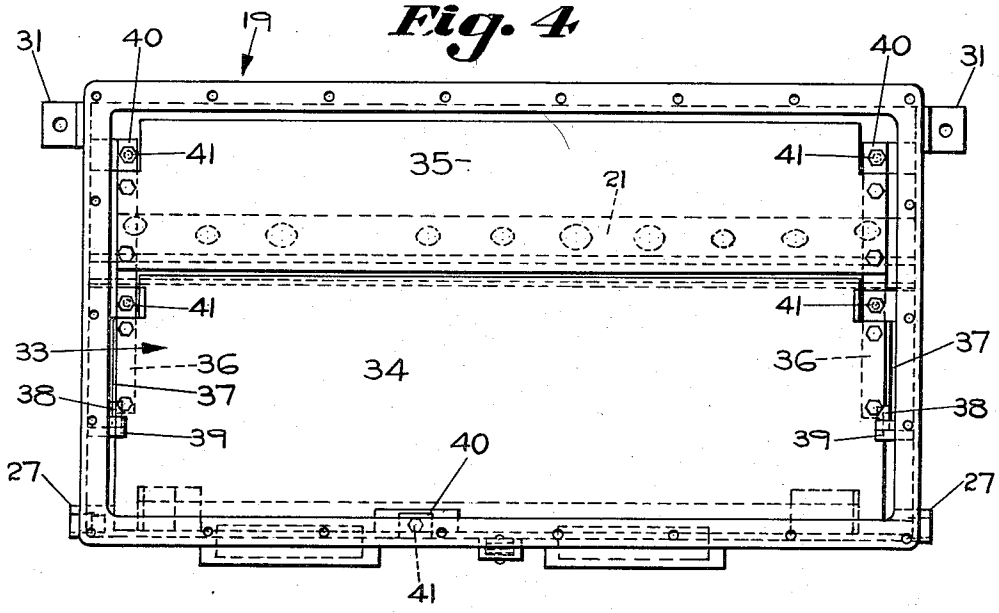

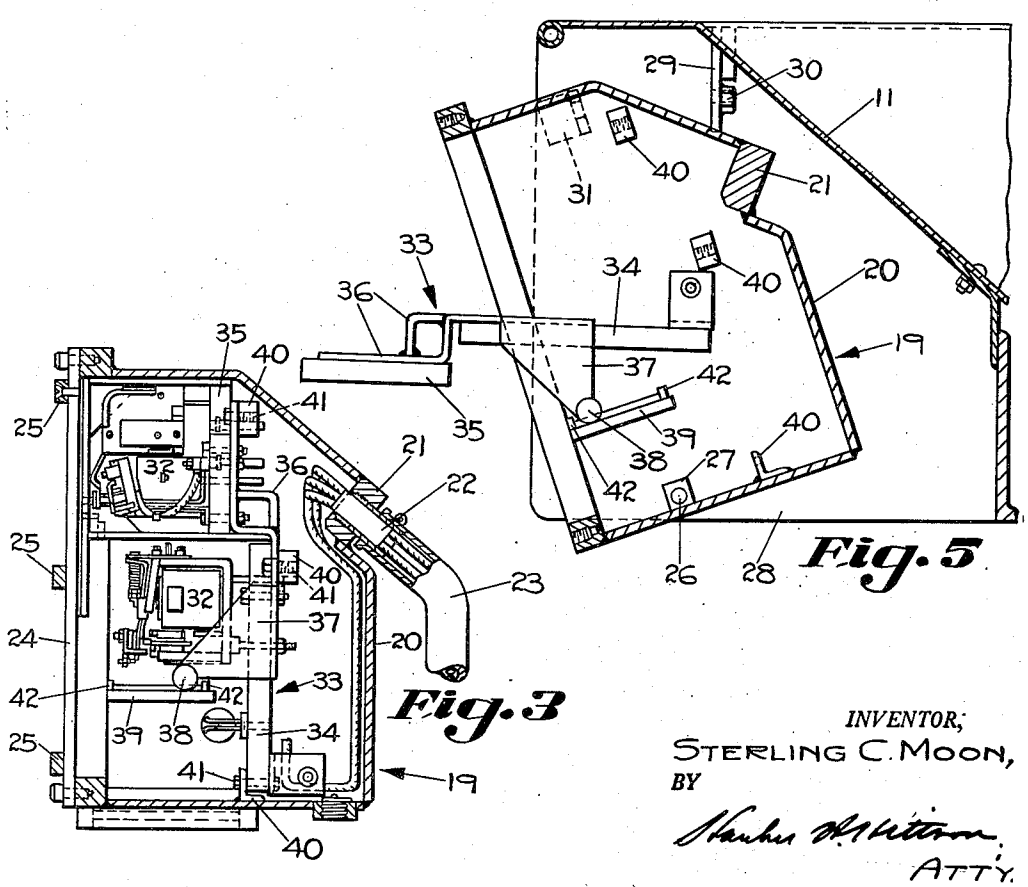

Fig. 5

Fig. 3

INVENTOR,
STERLING C. MOON,
BY
Stanley H. Hittson
ATTY.

United States Patent Office 2,699,966 Patented Jan. 18, 1955

2,699,966

UNDERGROUND MINE APPARATUS AND CONTROL HOUSING THEREFOR

Sterling C. Moon, Worthington, Ohio, assignor to The Jeffrey Manufacturing Company, a corporation of Ohio

Original application February 16, 1945, Serial No. 76,731. Divided and this application October 12, 1953, Serial No. 385,462

2 Claims. (Cl. 296—37)

This invention relates to underground mine apparatus and control housings therefor such, for example, as shuttle cars and housings for control apparatus thereof, and one object of the invention is, therefore, to provide improved apparatus of this general type.

Another object of the invention is to provide improved structure in mining machines wherein the main frame and/or body of the machine and improved housing means for control apparatus of the machine all cooperate to provide ready accessibility to normally inaccessible elements of the machine or control apparatus thereof for the purpose of repairing, adjusting or replacing the elements.

Another object of the invention is to provide an improved relation of parts in a housing for control apparatus, the improved housing preferably but not necessarily, being of explosion-proof construction and including means for mounting control apparatus within itself whereby the control apparatus may be swung, pivoted or moved when the housing is opened thereby to permit ready repair, adjustment etc. or replacement of the control apparatus and/or other elements normally inaccessible because of the presence of said control apparatus.

Other objects of the invention will appear hereinafter, the novel features and combinations being set forth in the appended claims.

In the accompanying drawings:

Fig. 1 is a view in perspective showing the discharge end and one side of a shuttle car embodying the features of the invention;

Fig. 2 is a view in perspective of the shuttle car seen in Fig. 1 but showing the gathering end and the opposite side of the shuttle car;

Fig. 3 is a view in section through an explosion-proof housing of the shuttle car which houses electrical control apparatus thereof;

Fig. 4 is a view looking at the left side of the housing as the latter is seen in Fig. 4, but with the cover and electrical apparatus removed therefrom; and

Fig. 5 is a view in section through a portion of the shuttle car and the housing, with view being taken substantially on line 5—5 of Fig. 2, and showing the housing pivoted or swung outwardly with respect to the main frame of the shuttle car and a rack or panel in the housing pivoted or swung and moved outwardly with respect to the housing whereby easy or ready access to the spaces behind both the housing and rack or panel may be had.

This application is a division of my co-pending application, Serial No. 76,731, filed February 16, 1945, and since abandoned, for Shuttle Car Construction. It is to be understood that construction and operation of the apparatus of this application follows the disclosure of my parent application, above identified, and that only the subject matter pertinent to the present invention is discussed herein in detail.

The shuttle car shown in Figs. 1 and 2 of the drawings is of the approved type, that is, it may be operated in a gaseous mine, and it includes what may be considered an integral built up main frame and body **10**. Body **10** includes a pair of spaced longitudinally extending side walls **11** and **12** which taper adjacent the gathering end of the shuttle car and overhang a pair of rear power driven traction and steering wheels **13** which are positioned in wells formed in said body **10**. As the body progresses toward the other or discharge end of the shuttle car it is narrowed into upright side walls **14** which extend between wells in which a pair of front traction and steering wheels **15** are positioned and which side walls **14** continue beyond the principal portion of the main frame **10** to constitute the side elements of a discharge boom **16**. In the bottom of the body **10** and boom **16** there is an endless chain and flight conveyer **17** which helps to load the body with coal to its full capacity and which is employed to discharge coal therefrom over the boom **16**. The walls **11**, **12** and **14** are each provided with upwardly outwardly sloping extensions **18** for increasing the load carrying capacity of the body **10**.

At one side of the shuttle car and between the wheels **13** and **15** (see Fig. 2) and in a recess or well formed by the main frame and body there is a hollow box-like housing and bumper **19** which is sealed to prevent the escape of any flame that would result as a consequence of an explosion of gas within the housing **19**. This type housing is known in the art as an explosion-proof housing and is so termed in the claims. Housing **19** is contained or carried in a recess or well formed in and by the main frame and body **10** between the wheels **13** and **15**. Housing **19** encloses electrical control apparatus of the shuttle car, such, for example, as relays and the like which may produce sparks when they operate while controlling the shuttle car. Housing **19** is removably mounted to the shuttle car main frame **10** and also to swing with respect thereto in the manner of a bread drawer or bin, that is, its top may be swung outwardly with respect to the main frame or body **10** of the shuttle car while its bottom rotates or pivots about the axis of aligned removable hinge or pivot pins.

Referring now to the construction of the explosion-proof box-like housing **19**, which is shown in detail in Figs. 3 through 5 of the drawings, the box-like housing **19** is of welded plate construction including plates welded together to form enclosing sides or end walls. Across its backwall **20**, that is, the right hand end or side of the housing as seen in Figs. 3 and 5, there extends a heavy bar-like member **21** that is drilled and tapped to receive a plurality of electric cable receiving fittings, one of which is seen at **22** in Fig. 3 of the drawings. An electric cable **23** passes through each of the fittings **22** and is sealed thereby to the housing **19** in an explosion-proof manner.

The front of the housing **19** is closed or covered by a removable plate or door **24** that is bolted thereto and which carries three horizontally extending reinforcing bars **25** on its outer surface. It may be mentioned that when the box-like housing **19** is secured into the shuttle car, the plate or door **24** and bars **25** are positioned in a vertical plane and they extend longitudinally between wheels **13** and **15** of the shuttle car to form outer or bumper surfaces of the housing **19** which protects that portion of the side of the shuttle car that lies between wheels **13** and **15** as seen in Fig. 2 of the drawings.

The explosion-proof housing **19** is pivotly supported by or attached adjacent its bottom to the main frame or body **10** through a pair of removable pivot pins or stub shafts **26** threaded into nuts **27** and which pins extend through portions **28** of the main frame or body **10** of the shuttle car which cooperate in forming the wells that receive the wheels **13** and **15** as well as the recess or well that receives the housing **19**. Adjacent its upper end, housing **19** is secured to the main frame or body **10** and against movement with respect thereto by a pair of spaced separable means, each of which includes a lug **29** welded to the main frame **10** having a nut **30** welded thereto, and a pair of lugs **31** welded to the sides of the housing **19** at the top thereof. When the housing **19** is in the position indicated in Fig. 2, bolts, not shown, extend through the lugs **31** and are threaded into nuts **30** on the lugs **29** to fasten the housing **19** immovably to the main frame. When these bolts are removed the housing **19** may be opened out of the main frame **10** in a drawer-like manner, that is, it may be pivoted outwardly in bread-bin fashion upon pivot pins **26** and when the housing **19** is pivoted outwardly, as described, a mechanic may have ready access to the space behind the housing **19** and between it and the main frame or body **10** of the shuttle car to repair and/or service any apparatus or appurtenance of the shuttle car or housing **19** which is positioned between the housing **19** and the main frame or

body 10 of the shuttle car. Housing 19 may be removed from the shuttle car by removing the bolts from lugs 31 and nuts 30 and by removing the pins or stub shafts 26.

Electrical operating apparatus, such as relays and the like, of the shuttle car which may, in their operation, produce electric sparks is housed in the explosion-proof housing 19. This apparatus, indicated generally by the numeral 32 in Fig. 3, is mounted upon a rack or panel 33 that may be swung and/or withdrawn outwardly of the housing when the removable cover plate or door 24 is removed. The rack or panel 33 includes a pair of vertically spaced panel elements 34 and 35 which are made of insulating material and upon which the electrical apparatus 32 is mounted. The upper panel 35 of rack 33 is mounted above and at one side, or nearer the removable cover or door plate 24 than is the lower panel 34, and these panels 34 and 35 are rigidly connected by means of a plurality of brackets 36 to which each of the panels 34 and 35 is bolted. The entire rack or panel 33 including the panels 34 and 35 is supported within the explosion-proof box 19 by a pair of spaced brackets or arms 37 that extend toward the removable cover or door 24 from each side of the panel 34 of rack 33. The free end of each arm or bracket 37 includes a generally circular boss, lug or pivot 38 that is received in a track-like support, bracket or guide 39. There are, of course, two of the track-like supports, brackets or guides 39 that are spaced and carried at opposite side or end walls of the box 19.

Rack 33 is normally carried within the housing 19 in the position seen in Fig. 3 and it is fastened adjacent its center and top and bottom ends to the housing through separable means including lugs 40 welded to the housing 19. Removable bolts 41 extend through openings in the brackets 36 and the panel 34 and are secured to the lugs 40 for securing the rack 33 against pivotal or other motion. When the cover 24 of the housing 19 and bolts 41 are removed the top of the rack, and of course, the apparatus 32 carried by it, may be swung, or swung and pulled outwardly from within the explosion-proof housing 19 in bread-bin fashion with the rack 33 pivoting on the spaced aligned pivots, bosses or lugs 38 while the latter rotate or rotate and slide upon the track-like supports, brackets or guides 39. The track-like supports, brackets or guides 39 each include a pair of end stops 42 which prevent the bosses 38 from sliding off the supports 39, and the rack 33 may be removed from the housing 19 by lifting it so that the bosses 38 pass over the stops 42 adjacent the uncovered side of box 19.

As seen in Fig. 5 of the drawings, the housing 19 may be opened in bread-bin fashion out of the main frame and body 10 to permit ready access to the fittings 22 and electric cables 23 and any other apparatus of the shuttle car which may be mounted between the back or the right hand side of the housing 19 and the main frame and body 10 as seen in Figs. 3 and 5. The rack 33 may, also, be swung or pivoted in bread-bin fashion and withdrawn from the explosion-proof housing 19 to permit ready access to the rear or back of the apparatus 32 and the rack 33.

From the foregoing description it will be apparent that I have provided an improved shuttle car which includes an explosion-proof housing for carrying and housing spark producing electric apparatus or apparatus which, if it should fail, is likely to produce a spark. It will be seen that since this explosion-proof housing is mounted to the shuttle car through two separable means, namely a hinge means and a fastening means, that when both of these means are separated the explosion-proof housing 19 may be removed from the shuttle car in its entirety or, if only the non-hinge mounting means is separated, the explosion-proof housing 19 may be swung outwardly with respect to the shuttle car whereby ready access to fittings and the like at or on the back of the housing may be had.

It will also be seen that by this invention there is provided a mine apparatus, and more specifically a mine shuttle car, in which the main frame provides a means

wherein there is mounted either removably or pivotally or both, a housing for control appurtenances of the shuttle car, the housing being so mounted that ready access may be had to elements normally inaccessible because of the presence of the housing.

It is also apparent that by this invention there has been provided an improved housing for control apparatus in which the control apparatus is mounted in the housing in such a manner as to be swung through the opened side or door of the housing and otherwise to be moved to positions whereby ready access may be had not only to the control apparatus but to fittings, electrical connectors and the like that would normally be in inaccessible positions within the housing, and that this housing structure when cooperating with the main frame of the shuttle car, as above set forth, provides for complete accessibility to all fittings and the like associated with both the housing and the control apparatus therein in a very desirable manner.

Obviously those skilled in the art may make various changes in the details and arrangement of parts without departing from the spirit and scope of the invention as defined by the claims hereto appended, and applicant therefore wishes not to be restricted to the precise construction herein disclosed.

Having thus described and shown an embodiment of the invention, what it is desired to secure by Letters Patent of the United States is:

1. A shuttle car including means forming a main frame and a load carrying body, a hollow box-like means on said shuttle car having a removable closure plate at one side thereof forming an explosion-proof housing for spark producing electrical operating apparatus of the shuttle car while forming a bumper means therefor, two separable means detachably securing said hollow box-like means to said shuttle car, at least one of said separable means forming a hinge whereby said hollow box-like means may be swung with respect to said shuttle car when the other separable means is separated, rack means within said hollow box-like means adapted to support said electrical operating apparatus, means supporting said rack means whereby it may be rotated within while being at least partially withdrawn through the side of said hollow box-like means normally closed by said removable closure plate, said supporting means including spaced bracket means carried within said hollow box-like means, pivot means carrying said rack and riding upon said spaced brackets, and means for securing said rack means within said box-like means in a fixed position.

2. A shuttle car including means forming a main frame and a load carrying body, a hollow box-like means on said shuttle car having a removable closure plate at one side thereof forming an explosion-proof housing for spark producing electrical operating apparatus of the shuttle car, two separable means detachably securing said hollow box-like means to said shuttle car, at least one of said separable means forming a hinge whereby said hollow box-like means may be swung with respect to said shuttle car when the other separable means is separated, rack means within said hollow box-like means adapted to support said electrical operating apparatus, and means supporting said rack means whereby it may be rotated within while being at least partially withdrawn through the side of said hollow box-like means normally closed by said removable closure plate.

References Cited in the file of this patent

UNITED STATES PATENTS

1,138,122	Lambert et al.	May 4, 1915
1,614,115	French	Jan. 11, 1927
2,192,650	Russell	Mar. 5, 1940
2,412,931	West	Dec. 17, 1946

FOREIGN PATENTS

195,361	Great Britain	Apr. 26, 1923