US00D589761S

(12) United States Design Patent

Ablo

(10) Patent No.: US D589,761 S
(45) Date of Patent: ** Apr. 7, 2009

(54) **FOOD MOLD**

(75) Inventor: **Famia E. Ablo**, Orlando, FL (US)

(73) Assignee: **Dart Industries Inc.**, Orlando, FL (US)

(**) Term: **14 Years**

(21) Appl. No.: **29/291,439**

(22) Filed: **Aug. 29, 2007**

(51) **LOC (9) Cl.** **07-04**
(52) **U.S. Cl.** **D7/677**; D10/46.2
(58) **Field of Classification Search** D7/672–677, D7/691; D10/46.2, 46.3; 249/117, 122, 249/129, 155, 156, 160; 99/324, 426, 428, 99/439, 440, 442
See application file for complete search history.

(56) **References Cited**

U.S. PATENT DOCUMENTS

3,191,520 A * 6/1965 Halter 99/428
D219,046 S * 10/1970 Swett D7/675
D394,217 S 5/1998 Laib
D396,011 S * 7/1998 Henriksson D10/46.2
D409,055 S * 5/1999 Johnson et al. D7/677
D488,079 S * 4/2004 Mastroianni D10/46.3
D518,391 S * 4/2006 McGuyer D10/46.2

* cited by examiner

Primary Examiner—Terry A Wallace
(74) *Attorney, Agent, or Firm*—John A. Doninger

(57) **CLAIM**

The ornamental design for a food mold, as shown and described.

DESCRIPTION

FIG. **1** is a top perspective view of a food mold showing my new design;

FIG. **2** is a front view, the rear view being a mirror image thereof;

FIG. **3** is a right side view thereof;

FIG. **4** is a left side view thereof;

FIG. **5** is a top plan view thereof;

FIG. **6** is a bottom plan view thereof; and,

FIG. **7** is a bottom perspective view thereof.

1 Claim, 4 Drawing Sheets

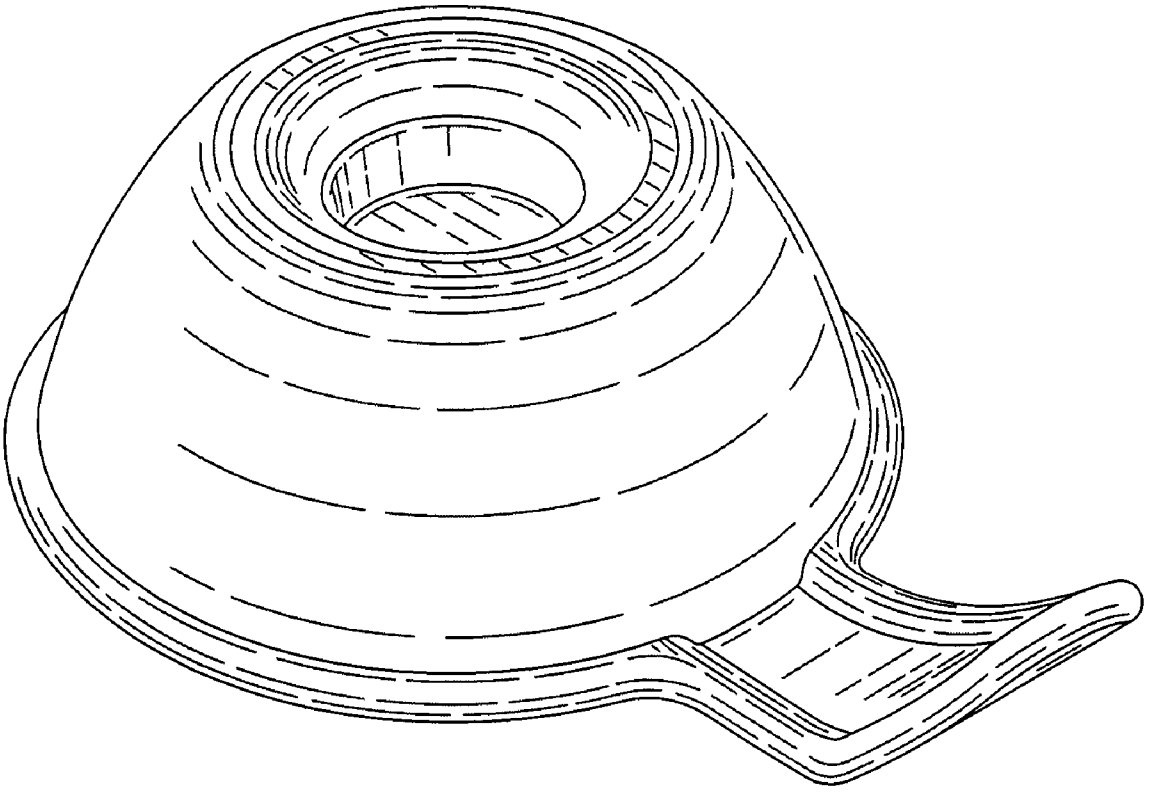

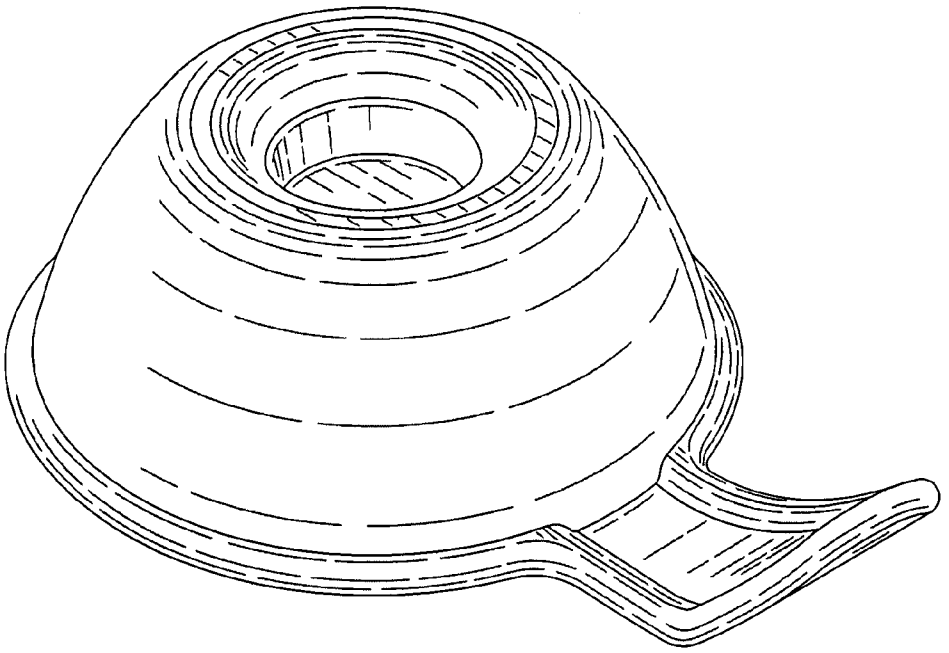

FIG. 1

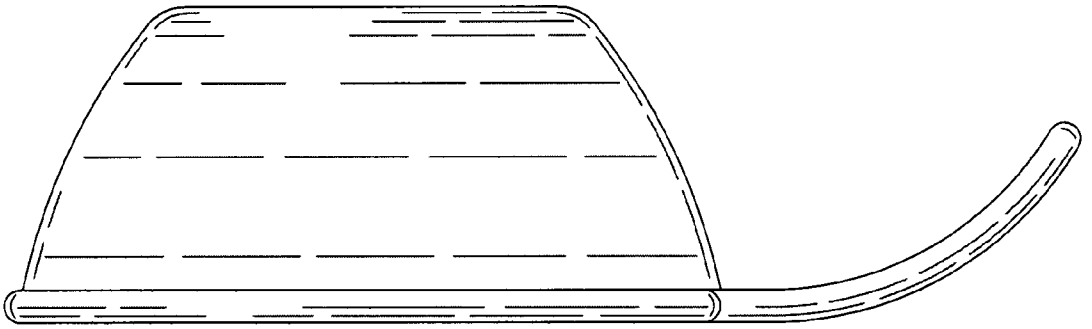

FIG. 2

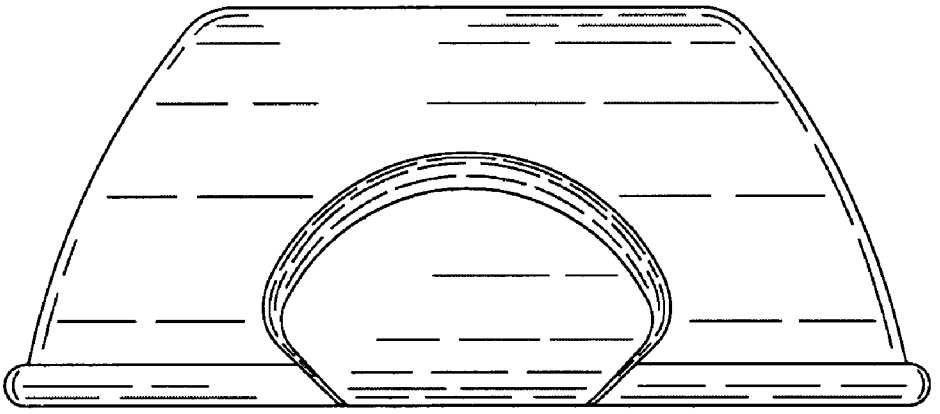

FIG. 3

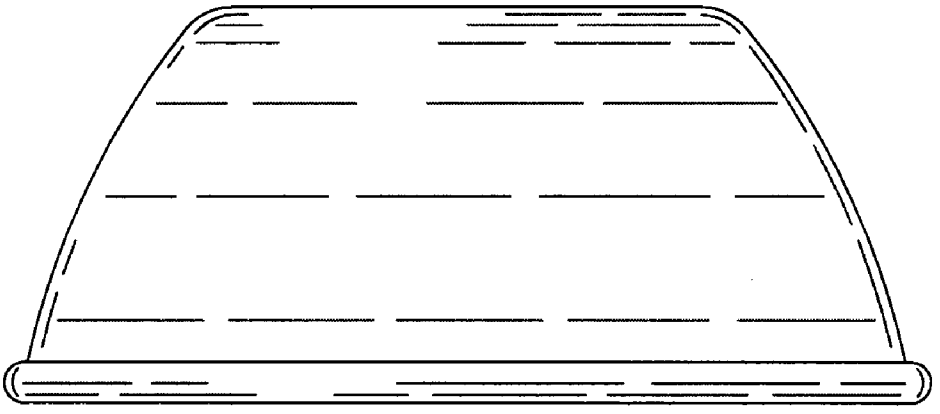

FIG. 4

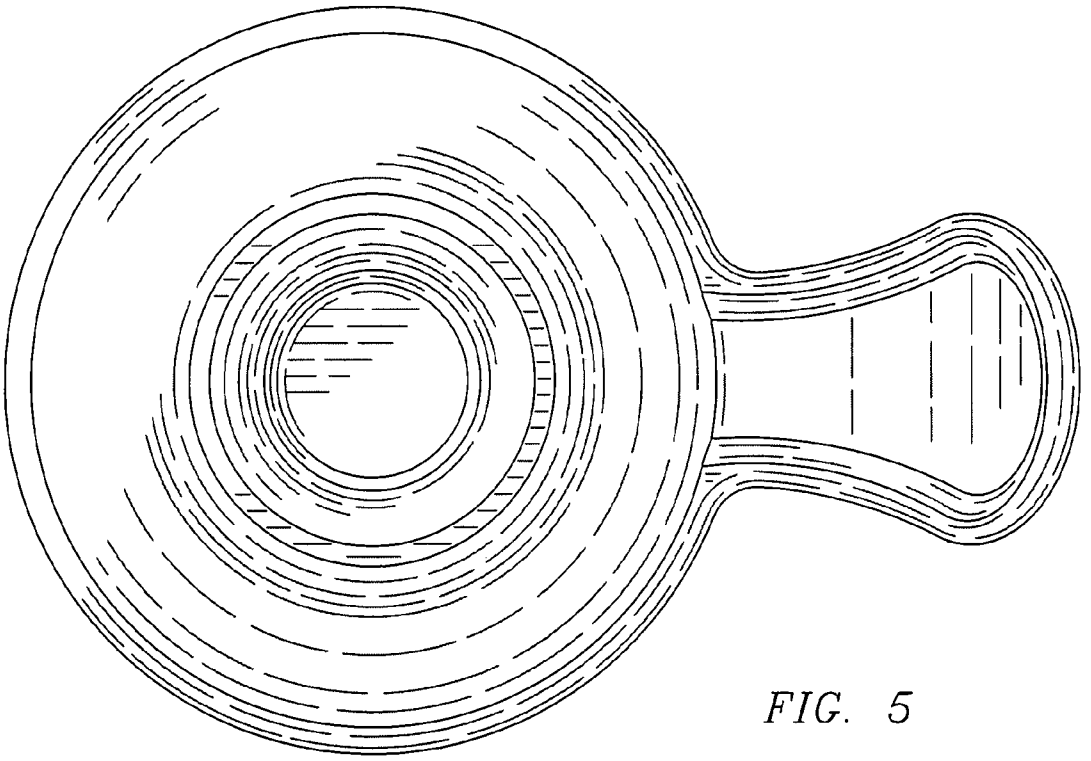

FIG. 5

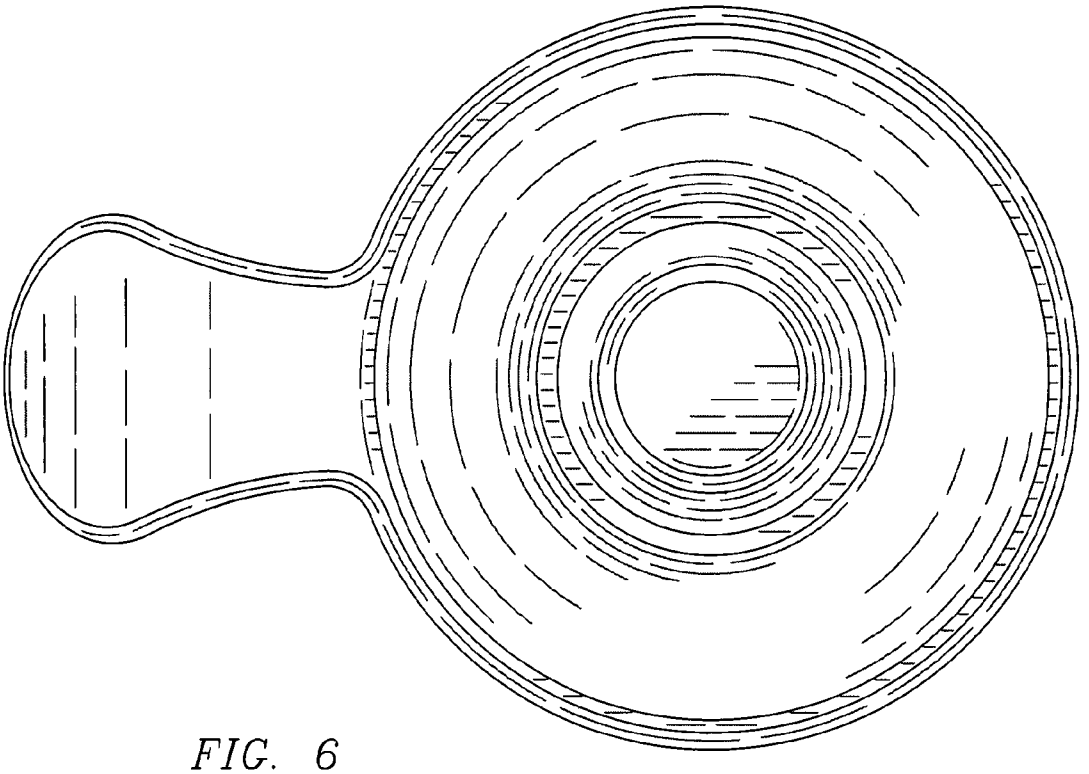

FIG. 6

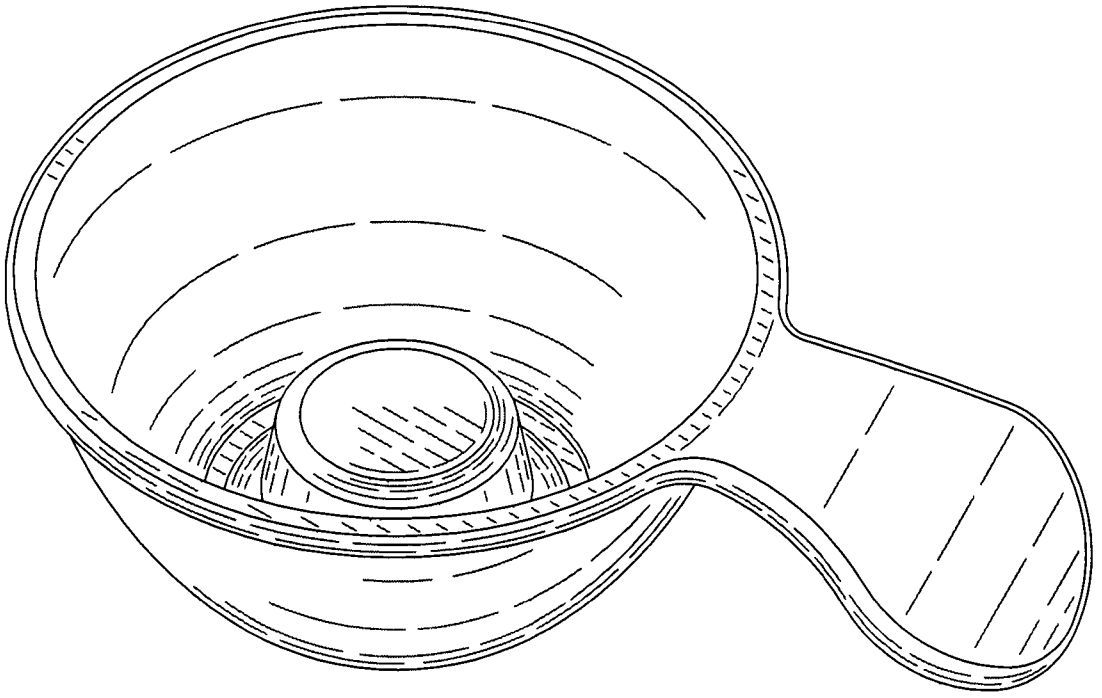

FIG. 7