Aug. 14, 1945. L. STASTNEY 2,382,451

CORE WINDING APPARATUS

Filed Aug. 8, 1944 3 Sheets-Sheet 1

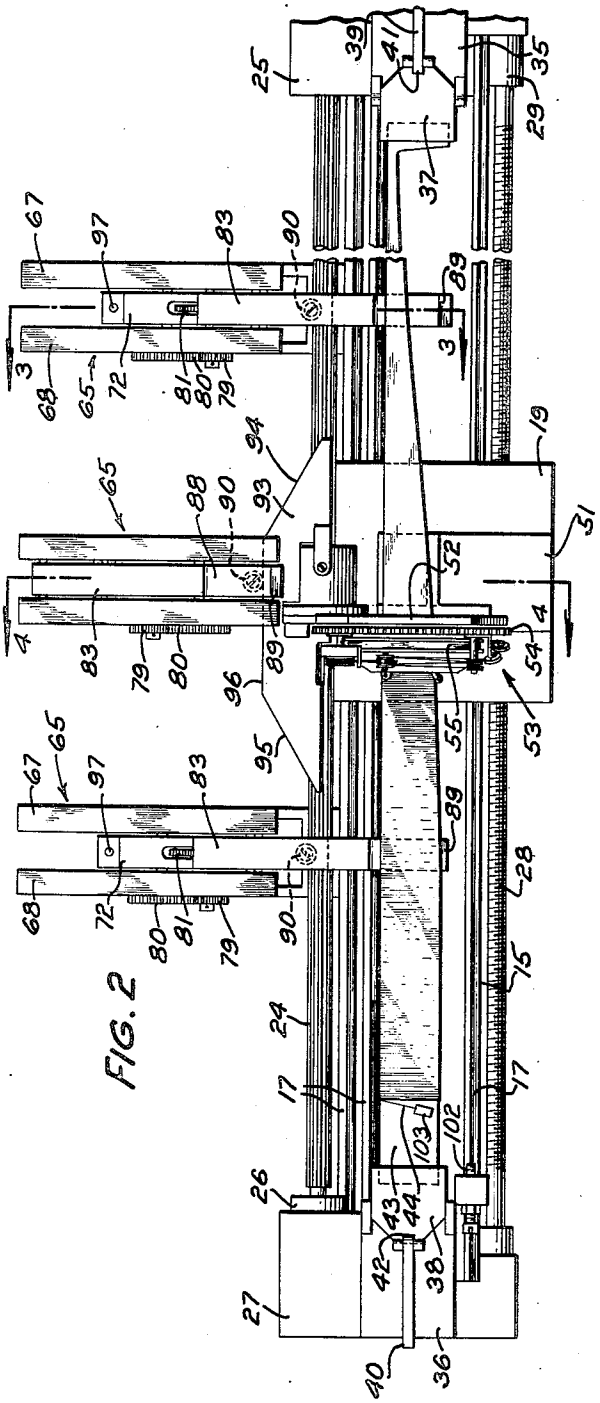

FIG. 2

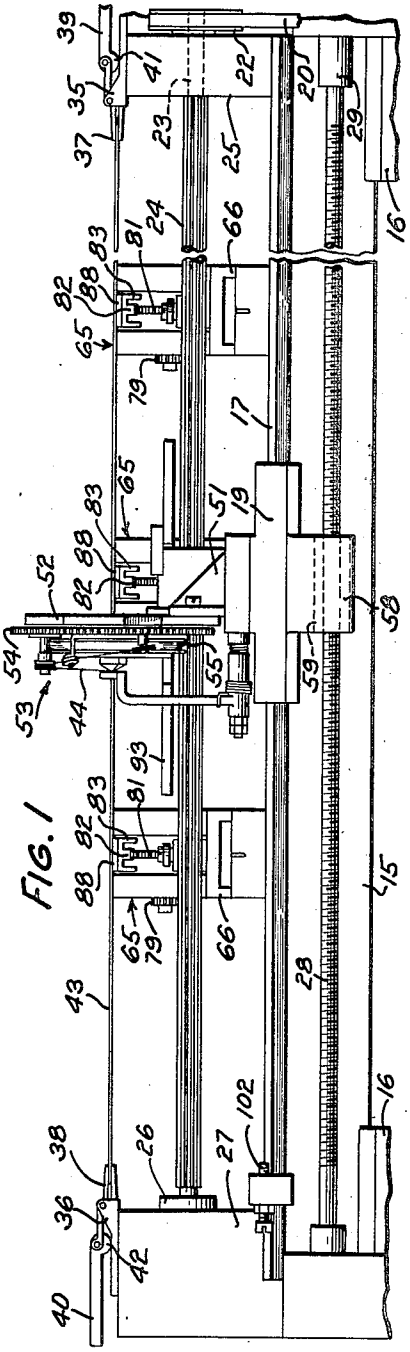

FIG. 1

INVENTOR
L. STASTNEY
BY Harry C. Duff
ATTORNEY

Aug. 14, 1945. L. STASTNEY 2,382,451

CORE WINDING APPARATUS

Filed Aug. 8, 1944 3 Sheets-Sheet 2

FIG. 3

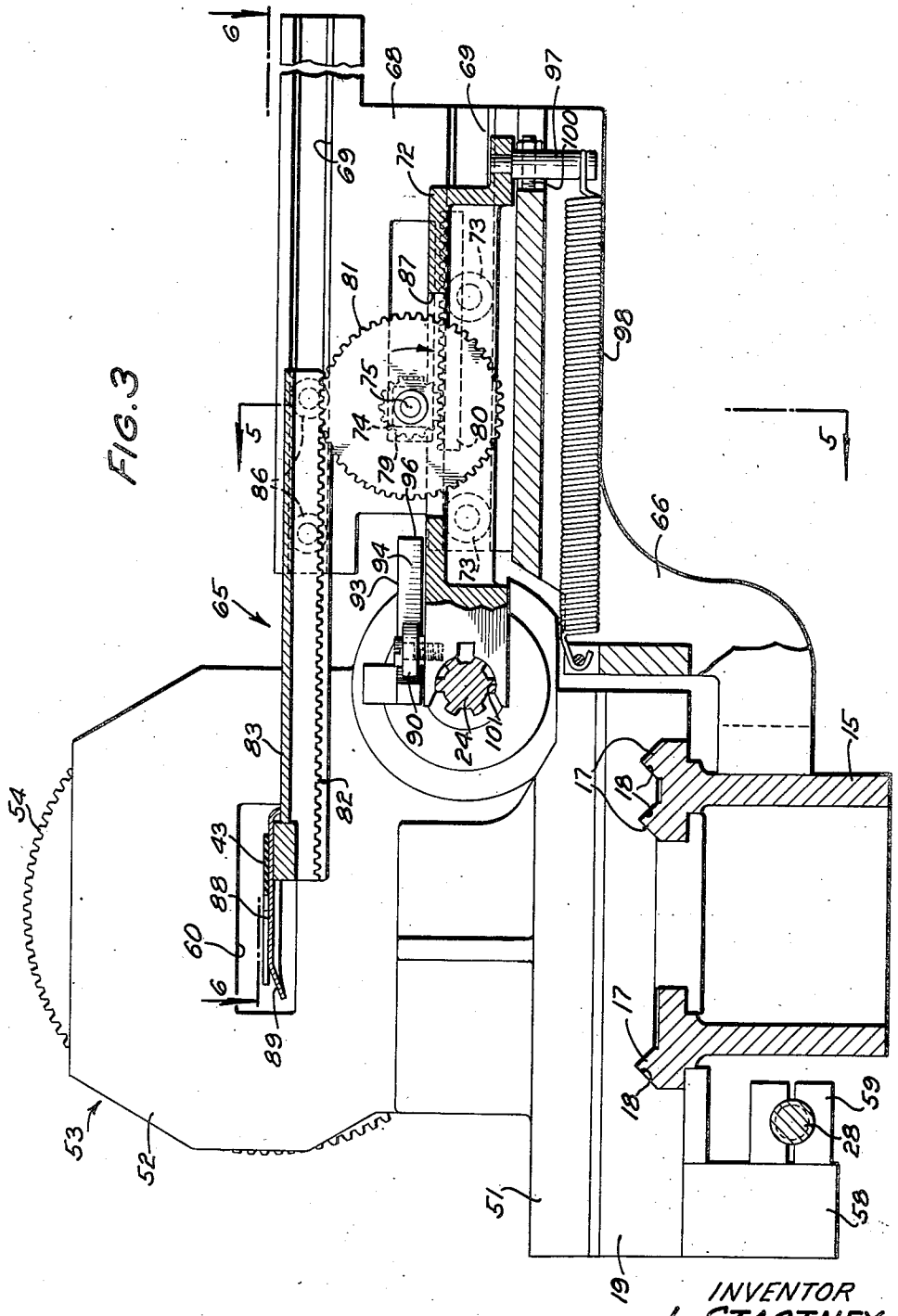

INVENTOR
L. STASTNEY
BY Harry L. Duffy
ATTORNEY

Aug. 14, 1945. L. STASTNEY 2,382,451

CORE WINDING APPARATUS

Filed Aug. 8, 1944 3 Sheets-Sheet 3

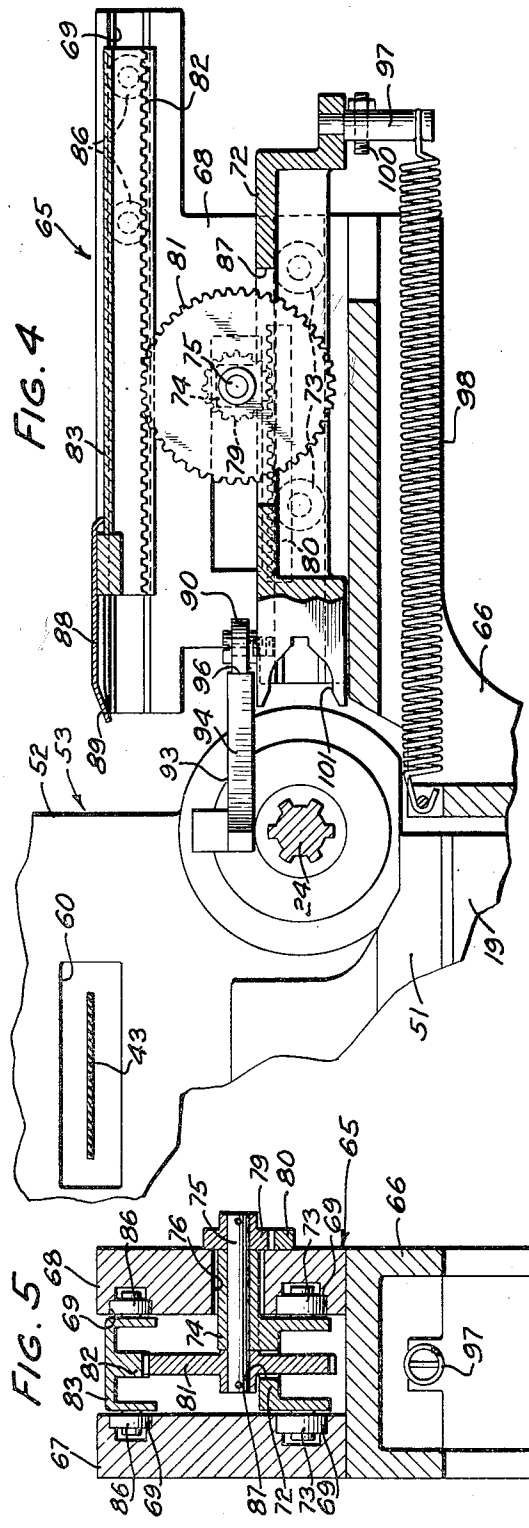

FIG. 4

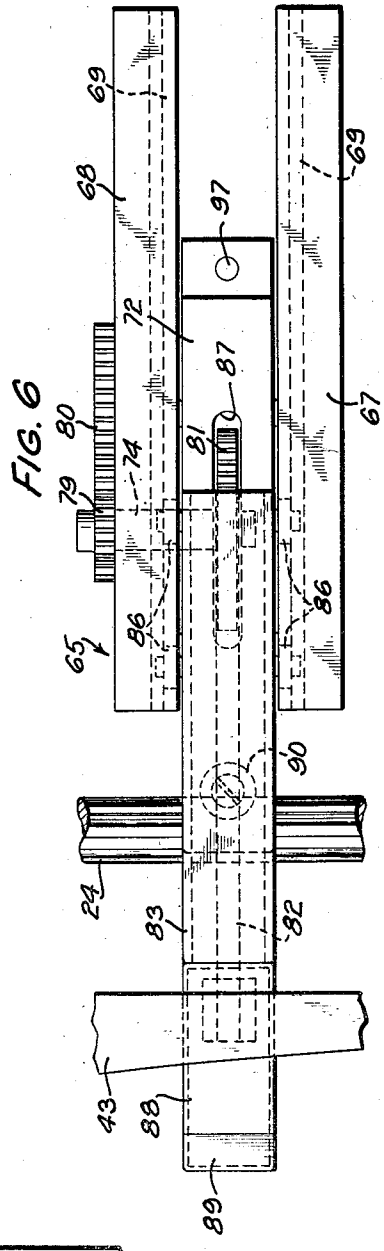

FIG. 6

FIG. 5

INVENTOR
L. STASTNEY
BY Harry R. Arnold
ATTORNEY

Patented Aug. 14, 1945

2,382,451

UNITED STATES PATENT OFFICE

2,382,451

CORE WINDING APPARATUS

Ladislav Stastney, Cicero, Ill., assignor to Western Electric Company, Incorporated, New York, N. Y., a corporation of New York

Application August 8, 1944, Serial No. 548,526

7 Claims. (Cl. 242—9)

This invention relates to core winding apparatus and more particularly to means for supporting a core during the winding thereof.

One type of core to be wound, and to the supporting of which the features of this invention are particularly applicable, may comprise flat relatively thin insulator cards of different lengths for use in potentiometers, some types of which use cards 30" to 60" in length. In order to prevent undue flexing or sagging of the card, which results in inaccurate windings thereon, it is desirable to constantly support the card at spaced points throughout its length and without interruption to the winding operation.

An object of the present invention is the provision, in a core winding apparatus, of practicable and efficient means for constantly supporting a core during the winding thereof.

In accordance with one embodiment of the invention, which is illustrated herein as applied to an insulator card winding apparatus of the type disclosed in application of Frank Martindell, Serial No. 495,912, filed July 23, 1943, now Patent No. 2,360,960, issued October 24, 1944, wherein a winding mechanism mounted on a carriage is advanced along the card, during which resistance wire is drawn from a spool ring or supply reel of the mechanism and laid with a high degree of accuracy on the card. Attached to the carriage is a cam which engages rollers on successive card supporting units arranged at spaced points along the card. The cam, on engaging the roller, applies a multiplied movement to a blade by means of interconnecting gear mechanism, so as to rapidly withdraw the blade which supports the card and, thereafter, permitting it to again advance by spring action to support the card as the winding mechanism approaches and passes the particular card supporting unit.

Other objects and advantages of this invention will more fully appear from the following detailed description, taken in conjunction with the accompanying drawings, in which

Fig. 1 is a fragmentary front elevational view of a winding apparatus embodying the features of the invention, a portion being broken away to conserve space;

Fig. 2 is a plan view of Fig. 1;

Fig. 3 is an enlarged vertical section through one of the card supporting units, taken on the line 3—3 of Fig. 2, the card supporting blade being shown in supporting relation with a card;

Fig. 4 is a fragmentary view similar to Fig. 3, taken on the line 4—4 of Fig. 2, showing the card supporting blade in a retracted position;

Fig. 5 is a vertical section taken on the line 5—5 of Fig. 3; and

Fig. 6 is a fragmentary plan view taken on the line 6—6 of Fig. 3.

Referring to the drawings, particularly to Figs. 1 and 2, one embodiment of this invention is shown applied, for example, to a winding apparatus, shown fragmentarily, of the type disclosed in the hereinbefore-referred-to allowed patent application. In the following description, only such parts of the winding apparatus will be referred to which are necessary to a full understanding of the features of the present invention as applied thereto. For a more detailed illustration and description of such a winding apparatus and its operation, reference may be had to the afore-mentioned patent application. Briefly, the referred-to winding apparatus includes a lathe bed 15, which may be mounted upon suitable standards 16—16, and which is provided, upon its upper surface, with ways 17—17 in registry with cooperating grooves 18—18 (Fig. 3) formed in the underside of a carriage 19, which is thus slidably mounted on the lathe bed 15. Power for driving the apparatus may be supplied from a suitable motor (not shown), which drives a belt 20 (Fig. 1) passing over a pulley 22. The pulley 22 is, in turn, suitably attached to a reduced portion 23 of a splined shaft 24 journalled in bearings 25 and 26, the bearing 25 being mounted upon the upper surface of the lathe bed 15 and the bearing 26 being mounted in the right hand end (Fig. 1) of a gear reducer unit 27, which is, in turn, mounted upon the upper surface of the lathe bed 15. Through suitable gearing in the gear reducer unit 27, the shaft 24 transmits power to drive a feed screw 28, the left end of which extends into the unit 27 and the right end of which is journalled in a bearing 29 mounted on the lathe bed 15.

Fixed to the upper surface of the bearing 25 and the gear reducer unit 27 are a pair of clamping jaws 35 and 36, respectively, having hinged on them cooperating clamping jaws 37 and 38, respectively. The jaws 37 and 38 have levers 39 and 40, respectively, pivoted to them and each of the levers is provided with camming portions 41 and 42, respectively, projecting eccentrically of the pivot point of the lever to engage the upper surfaces of the clamping members 35 and 36, respectively, and force the inwardly extending portions of the clamping jaws 37 and 38 toward the inwardly extending portions of the clamping jaws 35 and 36, respectively. These cooperating clamping jaws are provided for clamping an

insulator card 43, in position to have the windings of a resistance wire 44 wound upon it. The card 43, with the resistance wire wound upon it, is adapted to serve as the resistance element in a potentiometer which must be highly accurate in its operation and, accordingly, the insulators or cards 43 have a predetermined uniform thickness, but their width may be varied to follow a predetermined contour, whereby the amount of resistance per inch of card may vary at a predetermined rate, not necessarily constant. In the drawings, a card of relatively great length compared to its width, which gradually tapers from one end of its wound portion to the other end, is shown, but it will be understood that the apparatus is capable of winding convolutions of resistance wire 44 on a card 43 of any desired contour and of varying lengths within the limits of the apparatus.

Mounted upon the carriage 19 is a support bracket 51, which serves to support a plate 52 of a winding head or mechanism, indicated in general at 53. The winding head 53 includes a ring gear 54, which acts as a take-off ring for applying the resistance wire 44 to the card 43 from a supply reel or spool ring 55. An annular internally grooved pinion (not shown) meshes with the ring gear 54 and is journalled in a bearing block (not shown) attached to the plate 52. The grooved pinion receives the splines of the splined shaft 24 and thus the pinion will transmit motion from the shaft 24 to the ring gear 54, but may slide along the shaft when the carriage 19 moves the plate 52 of the winding head 53 longitudinally of the shaft. The carriage 19 has extending downwardly from it a bracket 58, on which there is mounted a feed nut 59, which threadedly engages the feed screw 28 driven from the speed reducer unit 27. Any suitable type of feed nut 59 may be provided, as is usual in similar mechanisms, whereby, after the feed screw 28 has fed the carriage 19 from one end of the lathe bed 15 to the other, the feed nut 59 may be released from the feed screw 28 to permit the carriage 19 to be returned to its starting position. No details of this mechanism have been shown since numerous devices would function in this capacity.

It will be understood that the card 43, which extends through an aperture 60 in the plate 52, is suitably supported therein in all directions by guiding means carried on the winding head 53, as the head moves longitudinally thereof. Further details of this card guiding means, as well as means provided for guiding the wire 44 drawn from the spool ring 55 to the card 43 on which it is wrapped during the rotation of the ring gear 54, and other details of the winding head 53 may be had by reference to the patent application hereinbefore mentioned.

The previously mentioned supporting units for the insulator or resistance cord 43 are indicated in general at 65. Three of the units 65 are illustrated in the present disclosure as applied to a winding apparatus of the type referred to and since the units are all identical in structure, the following detailed description applies to each of them. Each of the units includes a supporting bracket 66 fixed to the lathe bed 15 at its right side (Fig. 3), the units being arranged at suitably spaced points to support the particular type and length of card 43 being wound. Secured to the upper face of the bracket 66 are two spaced standards 67 and 68 having formed in their inner opposed faces roller tracks 69, which are arranged to provide upper and lower pairs of aligned tracks. A lower carriage 72 equipped with rollers 73, which ride upon the lower tracks 69, supports a bearing 74 (Fig. 5) for a shaft 75. The bearing 74 extends freely into a slot 76 formed in the standard 68 and the shaft 75, which extends at its outer end from the standard, has fixed thereto a pinion 79, which meshes with a stationary gear rack bar 80 secured to the standard 68. Fixed to the inner end of the shaft 75 is a gear 81, which meshes with a gear rack bar 82, depending from an upper carriage 83 equipped with rollers 86, which ride upon the upper tracks 69, the lower carriage 72 having a slot 87 for the movement of the gear 81.

Attached to the forward end of the upper carriage 83, as viewed in Figs. 1 and 2, or its left end, as viewed in Figs. 3, 4 and 6, is a supporting plate 88 for the card 43, the plate having a sloping outer end 89 for engaging and riding under the lower face of the card or the convolutions of wire thereon when the plate is projected into supporting relation therewith from its actuated position (Fig. 4) to its advanced position (Figs. 3 and 6) in a manner to be described hereinafter. The lower carriage 72 carries a cam roller 90 upon its upper face adjacent its forward end, which lies in the path of a cam plate 93 having inclined cam faces 94 and 95 at opposite ends interconnected by a rectilinear face 96, the cam plate being suitably fixed to the plate 52 carried by and movable with the carriage 19, upon which the winding head 53 is supported. Carried by and depending from the carriage 72 (Figs. 3 and 4) is a pin 97, to which is attached one end of a tension spring 98 having its opposite end secured to the bracket 66. The spring 98 normally acts to advance the carriage 72 to its operative position wherein the plate 88 is in supporting relation with the card 43. An adjustable screw 100 carried by the pin 97 and engaging an outer end face of the bracket 66 limits the advance movement of the carriage 72. The carriage 72, at its left end, as viewed in Figs. 3 and 4, is so shaped, as indicated at 101, that in its operative advanced position (Fig. 3) it serves as an intermediate support for the splined shaft 24 supported at opposite ends in the bearings 25 and 26.

In the operation of the disclosed type of winding apparatus equipped with the card supporting units 65, it will be understood that the carriage 19, supporting the winding head 53, will initially be in its extreme left-hand position (Figs. 1 and 2), in which starting position an adjustable abutment screw 102 (Fig. 1) supported from the lathe bed 15 engages a vertical end face of the carriage, although, as shown in the drawings, a partial winding of the card 43 has taken place and, therefore, the winding head is in an intermediate position.

After a card or insulator 43 has been clamped between the members 36 and 38 and 35 and 37 by manipulating the handles 40 and 39 after properly inserting the card through supporting means provided on the winding head 53 and described in the aforementioned patent application, the end of the resistance wire 44 may then be attached to the card 43, for example, by sticking it to the card by means of a piece of adhesive tape 103 and the motor (not shown) for driving the belt 20 may then be set in motion and the winding of the wire 44 on the card 43 will take place through the combined rotation and advance of the winding head 53 from its extreme left-hand starting position until the desired number of turns of wire is applied to the card.

In the continued advance of the winding head

53 from its left hand starting position until the card 43 has been wound, it will approach and pass the several card supporting units 65 in succession. Each unit, in turn, will be actuated to retract the card supporting plate 88 from supporting relation with the card 43, as shown in Figs. 3 and 6, and also in Figs. 1 and 2, wherein the right and left hand units 65 are also in their advanced supporting relation with the card. The retracted position of the plate 88 is shown in Fig. 4 and also in Figs. 1 and 2, wherein the intermediate unit 65 is in its retracted position.

In the operation of each of the units 65 and as the continually advancing winding head 53 approaches, the cam face 94 of the plate 93, moving with the winding head, engages the roller 90 carried on the lower carriage 72 and is moved upwardly, as viewed in Fig. 2, or to the right in Fig. 3, until it rides idly upon the rectilinear face 96 of the cam plate 93. The carriage 72 is thus similarly moved and the pinion 79 journalled thereon and meshing with the stationary gear rack bar 80 is rotated clockwise, as indicated by the arrow in Fig. 3. This motion of the pinion 79 is transmitted through the shaft 75 to the gear 81 and since the gear is several times greater in diameter than the pinion, the peripheral speed of the gear is multiplied. Since the gear 81 meshes with the gear rack bar 82 on the upper carriage 83, which carries the card supporting plate 88, the latter is rapidly withdrawn from supporting relation with the card 43, the arrangement being such that the plate 88 remains in card supporting position as long as possible during the approach of the winding head 53 and then in timed relation thereto is rapidly withdrawn. The plate 88 is held in its withdrawn position as long as the roller 90 is in engagement with the rectilinear face 96 of the continually advancing cam plate 93. Upon the roller 90 riding onto the inclined cam face 95 opposite to the cam face 94, the spring 98, which was tensioned during the withdrawal of the plate 88 from the card 43, acts to advance the carriage 72 to the left, as viewed in Fig. 4, and through the cooperating rack and gear mechanism interconnecting the carriage 72 with the carriage 83, the card supporting plate 88 is rapidly advanced in a similar direction, but at a multiplied rate of movement into supporting relation with the card 43 to the position shown in Fig. 3.

When the card 43 has been wound with the resistance wire 44 in the apparatus and the desired number of turns of wire applied to the card, the end of the wire may be attached to the card in any suitable manner and, upon releasing the clamping jaws 37 and 38, the completed resistance card may be removed from the apparatus. Manipulation of the feed screw nut 59 will permit the restoring of the carriage 19 to its left-hand starting position, abutting the screw 102, as previously described, and after reengaging the feed nut with the feed screw 28, another resistance card 43 may be mounted in position and wound in the manner above described. In the restoring of the carriage 19 to its starting position, it will be understood that the card supporting units 65 will be idly actuated in succession as the cam plate 93 moves thereby.

What is claimed is:

1. In an apparatus for winding convolutions of strand on a core, means for positioning and holding a core at opposite ends, a strand winding mechanism movable longitudinally of the core for applying convolutions of strand thereon, at least one support movable laterally of the core for supporting the core between its ends, and means for operating said support controlled by the movement of said winding mechanism longitudinally of the core for effecting a withdrawal of and then an advancement of said support to supporting relation with the core in timed relation to the approach and passing of the winding mechanism.

2. In an apparatus for helically winding a strand on a core, means for fixedly supporting the core at opposite ends, means movable longitudinally of the core for helically winding a strand thereon, at least one support movable laterally of the core for supporting the core between its ends, and means for operating said support controlled by the movement of said winding means longitudinally of the core for effecting a withdrawal of and then an advancement of said support to supporting relation with the core in timed relation to the approach and passing of the winding means.

3. In an apparatus for winding convolutions of strand on a core, means for positioning and holding a core at opposite ends, a strand winding mechanism movable longitudinally of the core for applying convolutions of strand thereon, a plurality of supports movable laterally of the core for supporting the core at spaced points between its ends, individual means operatively associated with each of said supports controlled by the movement of said winding mechanism longitudinally of the core for effecting in succession a withdrawal of and then an advancement of each of said supports to supporting relation with the core in timed relation to the approach and passing of the winding mechanism.

4. In an apparatus for winding convolutions of strand on a core, means for positioning and holding a core at opposite ends, a strand winding mechanism movable longitudinally of the core for applying convolutions of strand thereon, at least one support movable laterally of the core for supporting the core between its ends, means for operating said support, and an actuator for said support operating means movable with said winding mechanism and operatively engageable with said support operating means in the movement of said winding mechanism longitudinally of the core for effecting a withdrawal of and then an advancement of said support to supporting relation with the core in timed relation to the approach and passing of the winding mechanism.

5. In an apparatus for winding convolutions of strand on a core, means for positioning and holding a core at opposite ends, a strand winding mechanism movable longitudinally of the core for applying convolutions of strand thereon, at least one reciprocably mounted support movable laterally of the core for supporting the core between its ends, a rack and gear mechanism operatively connected to said support for operating the same, and means movable with said winding mechanism for causing actuation of said rack and gear mechanism during the movement of said winding mechanism longitudinally of the core for effecting a withdrawal of and then an advancement of said support to supporting relation with the core in timed relation to the approach and passing of the winding mechanism.

6. In an apparatus for winding convolutions of strand on a core, means for positioning and holding a core at opposite ends, a strand winding mechanism movable longitudinally of the core for applying convolutions of strand thereon, at least one reciprocably mounted support mov-

able laterally of the core for supporting the core between its ends, a reciprocatory gear rack connected to said support, a gear and pinion assemblage reciprocably mounted for movement laterally of the core, said gear meshing with said gear rack, a stationary gear rack meshing with said pinion, a spring operatively associated with said gear and pinion assemblage for constantly urging the same in one direction, and means movable with said winding mechanism for causing reciprocatory movement of said gear and pinion assemblage in an opposite direction during the movement of said winding mechanism longitudinally of the core for effecting a withdrawal of and then an advancement of said support to supporting relation with the core in timed relation to the approach and passing of the winding mechanism.

7. In an apparatus for helically winding a strand on a core, means for fixedly supporting the core at opposite ends, means movable longitudinally of the core for helically winding a strand thereon, a plurality of supports movable laterally of the core for supporting the core at spaced points between its ends, individual means for operating each of said supports comprising a reciprocatory gear rack connected to said support, a gear and pinion assemblage reciprocably mounted for movement laterally of the core, the diameter of said gear being several times that of said pinion and meshing with said gear rack, a stationary gear rack meshing with said pinion, a spring operatively associated with said gear and pinion assemblage for constantly urging the same in one direction, a cam follower carried by said gear and pinion assemblage, and a cam member carried by said winding means arranged in the path of said cam follower and engageable therewith for causing in succession a reciprocatory movement of each of said gear and pinion assemblages in an opposite direction during the movement of said winding means longitudinally of the core for effecting a rapid withdrawal of and then a rapid advancement of each of said supports to supporting relation with the core in timed relation to the approach and passing of the winding means.

LADISLAV STASTNEY.