Oct. 4, 1932. H. T. KINGSLEY 1,880,961

MUSICAL INSTRUMENT

Filed Jan. 16, 1931

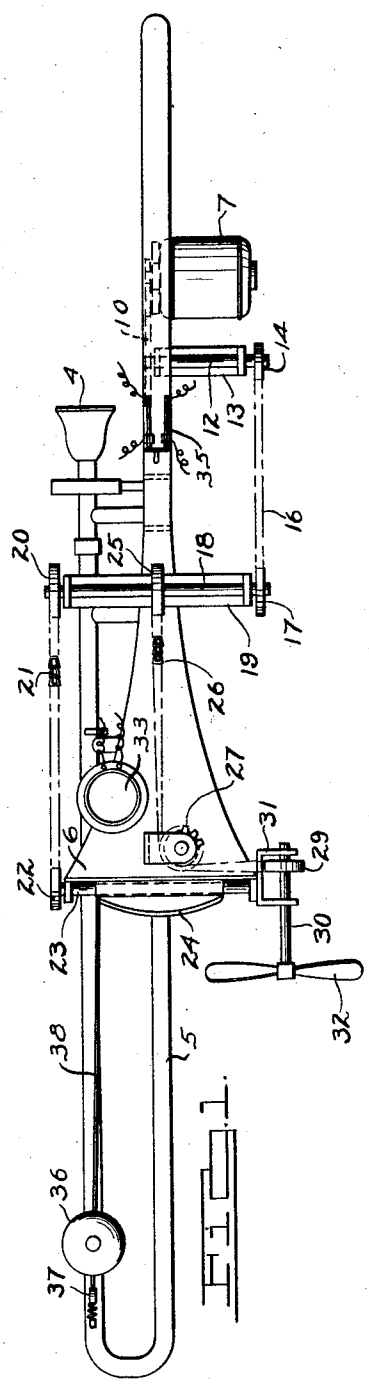

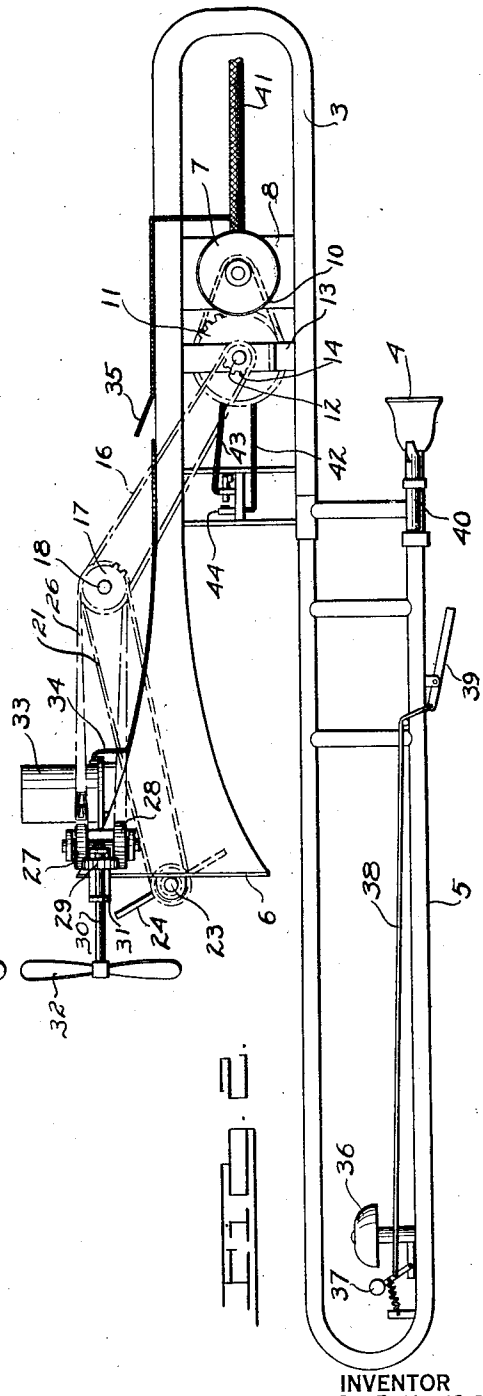

INVENTOR
HAROLD T. KINGSLEY.
BY
Harness, Dickey, Pierce & Mann,
ATTORNEY

Patented Oct. 4, 1932 1,880,961

UNITED STATES PATENT OFFICE

HAROLD T. KINGSLEY, OF DETROIT, MICHIGAN

MUSICAL INSTRUMENT

Application filed January 16, 1931. Serial No. 509,151.

This invention relates to wind instruments.

The main objects of this invention are to provide a portable wind instrument, such as a trombone, with mechanically driven means for affecting the notes produced in the instrument; to provide a new and novel type of wind instrument of this general character with novel means for varying the tones produced in the instrument, which means are visible and may contribute to the amusement of an audience, and to provide a wind-blown musical instrument, such as a trombone or the like, with an electric motor which drives mechanisms for varying sounds produced in the instrument.

An illustrative embodiment of this invention is shown in the accompanying drawing, in which—

Fig. 1 is a view in top plan elevation of a trombone equipped with my improved invention.

Fig. 2 is a view in side elevation of the same.

In recent times there has been considerable activity in developing various forms of novelty musical instruments, particularly for use in orchestras specializing in jazz music. This general class of music is particularly adaptable for combining with various forms of novelties for producing new and heretofore unheard of effects, which combine with the music being played by the orchestra.

In my improved invention, I provide a wind instrument such as a sliding trombone with mechanically driven means for partially interrupting the air-flow through the instrument, thus causing a peculiar fluttering effect to the notes produced. This mechanism is preferably operated by an electric motor mounted upon the trombone and such motor as well as all of the operating mechanism is attached in such a way as to be conspicuously exposed to the view of the audience.

In the construction shown in the drawing, a portable musical wind instrument, such as a trombone 3 having a mouthpiece 4, slide 5 and flared discharge end 6, all of the usual construction, is provided with an electric motor 7 rigidly mounted on a bracket 8 which is soldered or otherwise suitably secured between the U-shaped arms forming the main portion of the instrument.

The armature shaft of the motor 7 is provided with a chain sprocket 9 for driving a chain 10, which passes around a relatively large sprocket gear 11 keyed to a shaft 12, which is mounted in spaced parallel relation to the armature shaft 9 on a bracket 13, which is also secured by soldering or the like, to the instrument. The other end of the shaft 12 is provided with a relatively small sprocket 14 for driving an endless chain 16 which passes around a sprocket 17, secured to a second countershaft 18.

The shaft 18 is journaled in a bracket 19 in spaced parallel relation to the countershaft 12 and the opposite end thereof has secured thereto a sprocket 20 for driving the chain 21 which passes around a sprocket gear 22 secured to one end of a shaft 23. The shaft 23 is journaled diametrically across the open flared end 6 of the instrument and at the middle part thereof carries a butterfly valve 24, which is materially smaller than the discharge end 6 of the instrument so as to leave considerable clearance therearound.

The countershaft 18 also carries a sprocket 25 rigidly secured thereto for driving a chain 26 which passes around a pair of idler sprockets 27 and 28 and thence around a sprocket 29 secured to a shaft 30 which is journaled in a U-shaped bracket 31 secured to the flared end 6 of the instrument. The shaft 30 is disposed longitudinally of the instrument and one end thereof projects forwardly from the flared end 6 and is provided with a two bladed propeller 32, which is positioned so that the path of travel of the blades intersect the air coming out of the flared end of the instrument for modifying or varying the notes produced in the instrument.

The instrument 3 may also be provided with various other novelty attachments for securing various effects during the rendition of the performance, such, for instance, a cup 33 in which a charge of powder may be exploded by an electrical conductor 34, the current to which is controlled by a manually operable switch 35.

The slide of the trombone may also be provided with a bell 36 which is rung by a hammer 37 actuated by a flexible connection 38, which is attached to a lever 39, positioned so as to be readily operable by the hand of the musician which operates the slide of the trombone.

A whistle 40 may also be attached to the instrument closely adjacent the mouth piece 4.

Current is supplied to the electric motor 7 through a flexible conductor 41, two leads 42 and 43 of which extend forwardly to a switch 44 which is mounted conveniently to the hand of the operator which supports the main body portion of the musical instrument.

In the operation of this novelty instrument, the flexible conductor 41 is attached to a suitable source of electric current with sufficient slack in the conductor to permit free movement by the musician of the musical instrument.

When it is desired to modify the otherwise natural tones and notes produced by the instrument, the musician closes the switch 44, thus passing current to the motor 7. The motor 7 through the various sprocket and chain connections 9, 10, 14, 16, 17, 21 and 22 revolves the shaft 23 which carries the butterfly valve 24. Revolving of the butterfly valve 24 partially interrupts the flow of air coming through the instrument and in this manner modifies the tones and notes produced by the instrument by giving them a fluttering or interrupted effect. Rotation of the electric motor 7 also drives the sprocket chain 26, sprocket wheel 29 and shaft 30 which carries a propeller blade 32. This propeller blade's path of rotation is also across the discharge end 6 of the musical instrument and in like manner modifies or effects the notes or sounds produced in the trombone.

In the present invention I have specifically shown and described means which function in the matter of valves for partially interrupting the flow of air through the musical instrument to produce the flowing effect, but it is to be understood that various kinds of novelty attachments may be driven by the electric motor for adding to or effecting the notes and sounds produced in the instrument and it is to be understood that numerous details of the construction shown may be altered or omitted without departing from the spirit of this invention as defined by the following claims.

I claim:

1. The combination of a portable musical wind instrument having a mouth piece to which air is supplied from the lungs of the operator, a loosely fitting butterfly valve journaled at the discharge end of said instrument, and means for revolving said valve to effect the sounds produced in said instrument.

2. The combination of a portable musical wind instrument having a mouth piece to which air is supplied from the lungs of the operator, a loosely fitting butterfly valve journaled at the discharge end of said instrument and mechanically driven means for revolving said valve to effect the sounds produced in said instrument.

3. The combination of a portable musical wind instrument having a mouth piece to which air is supplied from the lungs of the operator, a loosely fitting butterfly valve journaled at the discharge end of said instrument, an electric motor mounted on said instrument, and connections between said motor and valve for revolving said valve to affect the sounds produced in said instrument.

4. A portable, musical "instrument having a mouth piece to which air is supplied from the lungs of the operator, a bell like discharge opening for the instrument," butterfly valve disposed in the opening but only partially closing it, a screw propeller disposed transversely of the opening and slightly in advance thereof and motor means disposed upon the instrument for simultaneously rotating the valve and the propeller.

HAROLD T. KINGSLEY.