(No Model.)

J. H. NORTHROP.

WARP STOP MOTION FOR LOOMS.

No. 590,551. Patented Sept. 21, 1897.

Fig. 1.

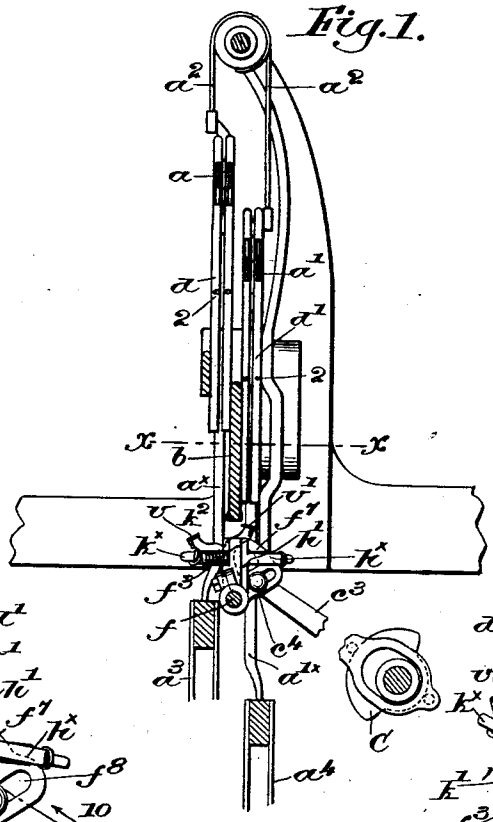

Fig. 4.

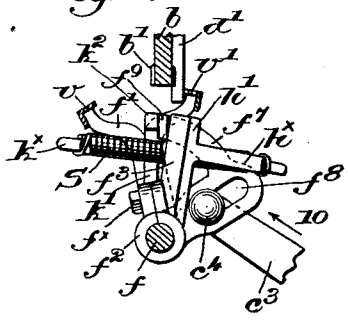

Fig. 5.

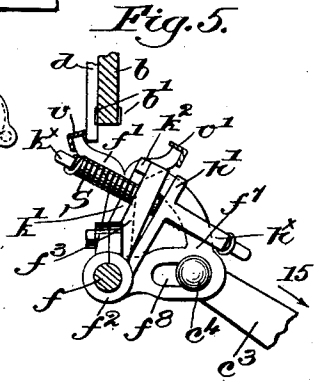

Fig. 2.

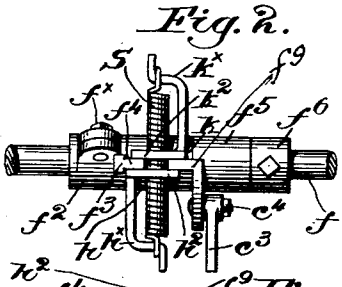

Fig. 6.

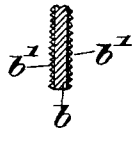

Fig. 3.

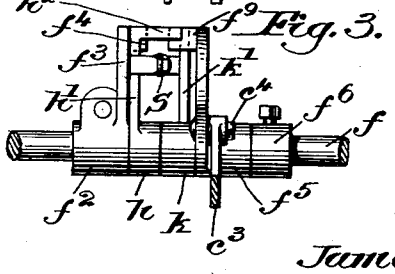

Witnesses:
A. C. Harmon.
Thomas J. Drummond.

Inventor:
James H. Northrop.
by Crosby & Gregory.
Attys.

THE NORRIS PETERS CO., PHOTO-LITH., WASHINGTON, D. C.

UNITED STATES PATENT OFFICE.

JAMES H. NORTHROP, OF HOPEDALE, MASSACHUSETTS, ASSIGNOR TO THE DRAPER COMPANY, OF SAME PLACE AND PORTLAND, MAINE.

WARP STOP-MOTION FOR LOOMS.

SPECIFICATION forming part of Letters Patent No. 590,551, dated September 21, 1897.

Application filed May 22, 1897. Serial No. 637,670. (No model.)

To all whom it may concern:

Be it known that I, JAMES H. NORTHROP, of Hopedale, county of Worcester, State of Massachusetts, have invented an Improvement in Warp Stop-Motions for Looms, of which the following description, in connection with the accompanying drawings, is a specification, like letters and figures on the drawings representing like parts.

This invention relates more particularly to warp-stop-motion mechanism for looms wherein failure of the warp-threads acts through suitable stop-motion-actuating detectors to stop the loom. The detectors, which may also serve as heddles, as hereinafter shown, are preferably flat metallic strips having each a warp-receiving eye, a dropped detector being engaged by and stopping the normal movement of a vibrator, such stoppage, through suitable mechanism, effecting automatically the stopping of the loom. In such apparatus it is usually necessary to adjust the parts with considerable accuracy in order to prevent bending or breakage of a dropped detector by the vibrator, and sometimes owing to carelessness or ignorance on the part of the attendant accidents will occur even with a reasonably accurate adjustment.

My present invention has for its object the production of vibrator-actuating mechanism so constructed that breakage or injury to a detector is absolutely prevented, the actuating mechanism being provided with a protective device which renders its operation entirely independent of the attendant. The actuating mechanism may be operated by or through the peculiar cam and stopping mechanism shown in another application, Serial No. 627,545, filed by me March 15, 1897, or any suitable cam of usual construction may be used to operate the actuating mechanism, and any suitable stopping mechanism for the loom may be used in connection therewith, the stopping mechanism being rendered operative upon stoppage of the vibrator by engagement with a dropped detector.

Figure 1 is a partial longitudinal sectional view of a sufficient portion of a loom to be understood with my invention applied thereto. Fig. 2, on an enlarged scale, is a top or plan view of the protector mechanism. Fig. 3 is a rear elevation thereof, looking to the left, Fig. 1, and also enlarged. Fig. 4 is an enlarged side elevation of the protector mechanism engaging a dropped detector when moving in one direction. Fig. 5 is a like view, but moving in the opposite direction and also engaging a dropped detector; and Fig. 6 is a partial longitudinal section taken on the line $x\ x$, Fig. 1.

In Fig. 1 the front and back banks of detectors d and d', which also serve herein as heddles and are preferably made as flat thin metal strips, each having a warp-eye 2, are arranged in double series and slotted at their upper ends to receive cross-bars $a\ a'$, forming parts of vertically-reciprocated frames $a^{\times}\ a'^{\times}$.

The frames are connected by suitable flexible overhead connections a^2, while at their lower ends the frames are connected to usual cam-actuated treadles (not shown) by straps $a^3\ a^4$.

A separator b, extended across the loom, separates the lower ends of the two sets of detectors $d\ d'$ and also serves as a back-stop or support for a dropped detector when engaged by the vibrator, the lower edge of the separator having preferably a serrated or milled foot b' to prevent twisting of an engaged detector.

Below the separator a rock-shaft f is mounted in suitable bearings and extended across the loom, said rock-shaft having fast thereon yoke-like arms f', to which are secured vibrators $v\ v'$ to engage a dropped detector d or d', respectively. It will be understood that the detectors have a vertical movement independent of their supporting-bars $a\ a'$ and that when the warp-threads are intact or properly taut their detectors will be held with their lower ends above the path of movement of the coöperating vibrator, as in United States Patent to Roper, No. 536,969, to which reference may be had. Now if the mechanism for actuating the vibrator is not properly adjusted engagement with a dropped detector would result in injury to the detector or to the coöperating mechanism, and to prevent such contingency the vibrator-actuat-

ing mechanism includes protective devices, whereby injury of the parts cannot occur even if the adjustment is not exact.

The rock-shaft f has rigidly secured thereon a split collar f^2, adjustably held in place by a set-screw $f^\times$, the collar having a radially-extended arm f^3, having a laterally-offset ear f^4, parallel to the length of the rock-shaft.

Two hubs h and k are mounted loosely on the rock-shaft end to end between the collar f^2 and a loose sleeve f^5, the latter being held from longitudinal movement by a collar f^6, fast on the shaft.

Radial arms h' k' on the hubs are oppositely extended in parallelism at their outer ends at h^2 k^2, Fig. 2, to receive between them the ear f^4, which, it will be remembered, moves with the rock-shaft, the arms h' k' being drawn toward each other by a spring S, secured to oppositely-projecting extensions $h^\times$ $k^\times$ of the arms.

The loose sleeve f^5 is provided with a segmental arm f^7, radially slotted at f^8 and provided with an inturned ear f^9 which projects between the bent ends h^2 k^2, as clearly shown in Figs. 2 and 3, the said arm and ear serving as an actuator for the rock-shaft.

Any suitable cam, as C, Fig. 1, reciprocates a link c^3, provided with a stud c^4 to enter the slot f^8 of the actuator-arm f^7 thereby rocking the sleeve f^5 and its arm and normally rocking the shaft f through the arms h' k', the spring S being strong enough to draw the arms together against the ears f^9 and f^4 when the loom is running properly, so that they move as one piece.

Referring now to Fig. 4, the link c^3 moving in the direction of arrow 10, suppose a detector d' has dropped, by breakage or undue slackness of its warp-thread, to be engaged by its coöperating vibrator v', stopping its movement as well as that of the rock-shaft f. As the link completes its throw the ear f^9 will swing the arm k' with it, but the ear f^4, fast on the rock-shaft, will oppose the movement of the arm h', and consequently the spring S will be stretched as the movement of the link continues and is completed. This yielding of the spring relieves or protects the engaged detector from undue pressure and absolutely prevents any distortion or injury of the parts, even if the adjustment of the vibrator-actuating cam C is improper.

In Fig. 5 the link is moving oppositely or in the direction of the arrow 15, and one of the detectors d has engaged and stopped its vibrator v and the rock-shaft f.

The ear f^4, movable with the rock-shaft, then holds the arm k' stationary, while the moving ear f^9 continues to swing the arm h', the spring S yielding and permitting the separation of the arms h' k', as before.

The slot f^8 of the actuator-arm permits the necessary lost motion, as in the construction shown the movement of the link is longitudinal only. Should the link be free to rock also as it is reciprocated, it could be joined directly to the actuator without the slot-and-pin connections herein shown. It will be understood that stoppage of the rock-shaft f by engagement of a dropped detector with the vibrator will effect the operation of a suitable stopping mechanism (not shown) to stop the loom automatically. Thus while the link c^3 may have a constant stroke, as herein shown, to normally rock the vibrators toward and below the detectors the protector devices interposed between the link and the rock-shaft permit stoppage of the latter, while the link continues its full stroke.

The strength of the spring is sufficient to overcome the normal resistance of the various parts, but yields when a dropped detector is engaged by its vibrator to prevent undue pressure upon the detector.

The mechanism herein shown is simple, strong, and durable, and requires no adjustment after the loom is once set up, the spring allowing for and taking up any slight deficiency in adjustment or that due to wear.

Having fully described my invention, what I claim, and desire to secure by Letters Patent, is—

1. In a warp stop-motion for looms, a vibrator rock-shaft having an attached ear, two yieldingly-connected arms having hubs loosely mounted on the rock-shaft, a spring to draw said arms together to engage opposite sides of the ear, a sleeve fulcrumed in alinement with the shaft, provided with an arm having an ear interposed between said spring-connected arms, and means to uniformly rock the sleeve, whereby the connected arms will be rocked in unison to correspondingly move the rock-shaft, substantially as described.

2. In a warp stop-motion for looms, a vibrator rock-shaft having an attached ear, two yieldingly-connected rocking members fulcrumed in alinement with the longitudinal axis of said rock-shaft, to normally engage opposite sides of the ear thereof, and an actuator to normally swing said members in unison and through its ear rock the shaft, stoppage of the latter holding one member while its fellow member is moved by and in unison with the actuator, substantially as described.

3. In a loom, a series of warp-stop-motion-actuating detectors movable into operative position by breakage or undue slackness of the warp-threads, a rock-shaft having an attached vibrator to engage and be held by a dropped detector, an ear on the rock-shaft, two yieldingly-connected arms loosely mounted on the said shaft, to engage opposite sides of the ear thereof, and a reciprocating actuator to normally swing said members in unison and thereby rock the shaft, stoppage of the vibrator holding one member and permitting the other member to continue its movement in unison with the actuator, substantially as described.

4. In a loom, a series of vertically-recipro-

cating warp-stop-motion-actuating detectors serving as heddles movable into operative position by breakage or undue slackness of the warp-threads, a rock-shaft having an attached vibrator, an ear on said shaft, two spring-connected arms mounted to rock on the shaft and to engage opposite sides of the ear, a sleeve loosely mounted on the shaft, having an arm provided with an ear to enter between said arms, and means to rock said sleeve and its arm, whereby said spring-connected arms will be normally swung in unison to rock the shaft, the connecting-spring yielding upon stoppage of the vibrator by a dropped detector, to prevent undue pressure upon the latter, substantially as described.

In testimony whereof I have signed my name to this specification in the presence of two subscribing witnesses.

JAMES H. NORTHROP.

Witnesses:
HERBERT S. MANLEY,
GEO. OTIS DRAPER.