June 17, 1969 J. DE LIGT 3,449,811

METHOD AND APPARATUS FOR COVERING ROLLS

Filed Oct. 10, 1966

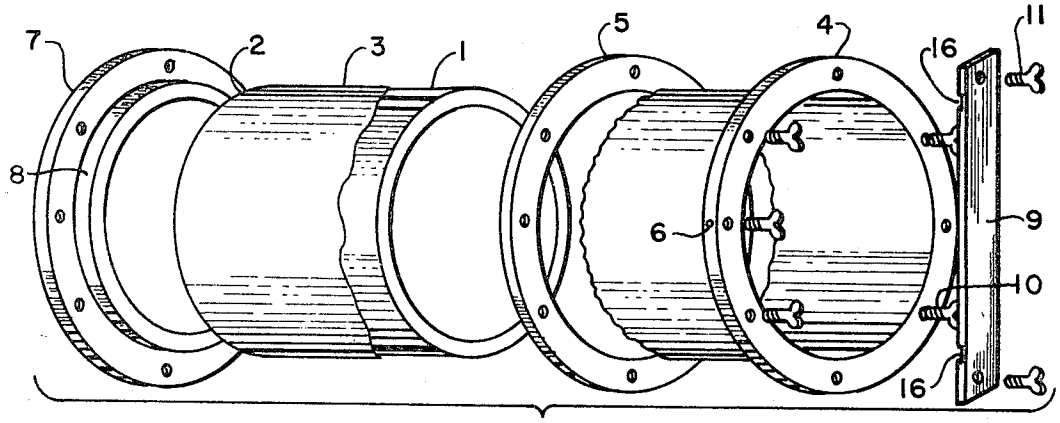

Fig. 1

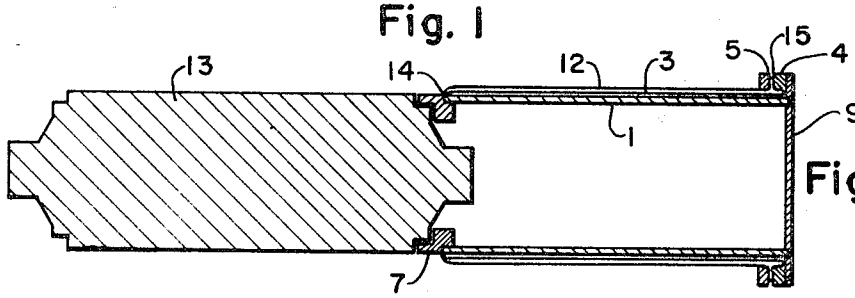

Fig.2

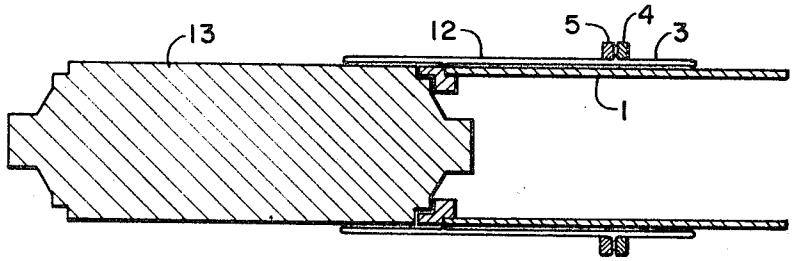

Fig.3

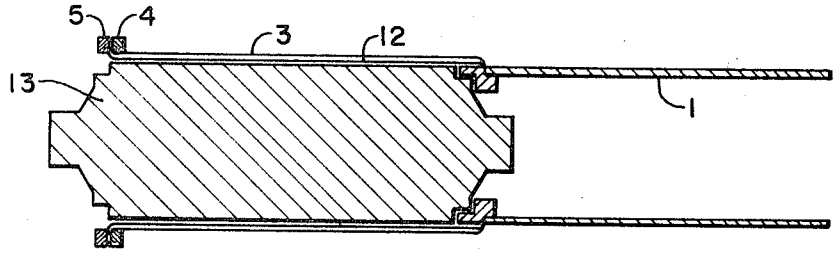

Fig.4

INVENTOR.
John De Ligt
BY Thomas W. Flynn
ATTORNEY

United States Patent Office

3,449,811

Patented June 17, 1969

1

3,449,811
METHOD AND APPARATUS FOR COVERING ROLLS

John De Ligt, Covington, Va., assignor to West Virginia Pulp and Paper Company, New York, N.Y., a corporation of Delaware

Filed Oct. 10, 1966, Ser. No. 585,560
Int. Cl. B21d *53/12;* B21h *1/18*
U.S. Cl. 29—148.4 10 Claims

ABSTRACT OF THE DISCLOSURE

A sleeve of resilient material may be stretch fitted to a roll core by clamping both ends of the sleeve to a second, internally supported sleeve positioned inside the first sleeve, pressurizing the space between the sleeves to expand the first sleeve, positioning one end of the sleeve next to the end of the roll core and then reversely rolling both sleeves over the core; after which the second sleeve, which is now on the outside, is removed, leaving the first sleeve in position on the core.

The present invention is directed to a method and apparatus for covering rolls and more particularly, to a method and apparatus for applying a resilient sleeve member to a roll core.

It is often desirable to stretch fit a resilient sleeve of material, such as rubber or the like, to a roll core to provide a resilient surfaced roll. However, since the sleeve must be expanded to provide a stretch fit on the roll and one or both contacting surfaces of the sleeve and core are usually coated with a contact cement or the like, great difficulty has been experienced in applying the sleeve to the core without the occurrence of wrinkles, air pockets and the like. Additionally, the difficulty in merely applying a coating of adhesive to the inner surface of the sleeve will be readily apparent.

Various attempts have been made in the past to provide means for efficiently applying resilient sleeves to core members. One approach, for example, has been to inflate the sleeve by means of air pressure and then insert the core into the sleeve while maintaining the sleeve in its inflated condition. Another approach has been to expand the sleeve by means of a vacuum chamber prior to core insertion.

The use of a vacuum chamber, however, calls for fairly expensive and elaborate equipment and requires considerable skill in positioning the sleeve in the chamber and expanding it; while the inflation method is rather inefficient since the sleeve must be kept inflated while at least one of its ends are left open to permit entry of the core. It is also to be noted that in both approaches there is danger of entrapping air between the core and the sleeve when the sleeve is allowed to contract about the core and, of course, no provision is made for facilitating the coating of the sleeve inner surface.

Thus, despite the need for a simple and efficient method and apparatus for applying a resilient sleeve to a roll core, many of the difficulties associated with this operation have remained unsolved over a period of several years.

It is, therefore, an object of the present invention to provide a method and apparatus for stretch fitting a resilient sleeve to a core member.

Further, it is an object of the present invention to provide apparatus for carrying out the method of the invention which is of relatively uncomplicated and inexpensive construction and yet is characterized by simplicity and efficiency of operation.

As will presently be seen, by means of the instant invention a sleeve may be evenly advanced onto an adhesive covered roll core while the sleeve is simultaneously pressed against the surface of the core to prevent the occurrence of air bubbles, air pockets, wrinkles and the like.

2

Additionally, it will be seen that, if it is desired to coat the inner surface of the sleeve, this operation may readily be accomplished. These and other objects and advantages will become more readily apparent from the following detailed description and accompanying drawings wherein:

FIGURE 1 is an exploded view, with portions removed for clarity, of the apparatus of the invention; and

FIGURES 2–4 are a series of cross-sectional views showing the method of applying a resilient sleeve to a roll core in accordance with the principles of the present invention.

Turning now to FIGURE 1 of the drawings, it will be seen that the sleeve applying apparatus comprises a tubular support member **1**, preferably of some rigid yet lightweight material. While support member **1** is shown as of cylindrical configuration, it will be apparent as the description proceeds that any configuration which will support a sleeve member in a substantially cylindrical configuration will suffice. For example, a skeletal framework, adjustable in size, if desired, might be used.

Extending about the support member **1** is a sleeve member, preferably made of some resilient material, such as rubber or the like. Sleeve **3** extends coextensively with the support member **1** and may be permanently attached at one end **2** to the support member and at its opposite end to a clamp ring **4** by means of an adhesive or the like. A second clamp ring **5** is provided which is substantially identical to clamp ring **4** except that a valve opening **6** is provided in clamp ring **4**. An adaptor ring **7**, chamfered to provide a shoulder **8**, is adapted to be inserted in one end of the support member **1** and a retaining bar **9** is provided at the opposite end of the support member **1** for a purpose to presently be described.

Referring now to FIGURES 1 and 2 of the drawings, the manner of assembling the apparatus for carrying out the method of the present invention will be described. First, the adaptor ring **7**, which may be attached to the end of the support member **1** by means of set screws or the like, is removed, and the clamp ring **5**, secured to clamp ring **4** by means of thumb screws as at **10**, is detached. Additionally, the retainer bar **9**, attached to clamp ring **4** by means of thumb screws **11**, is also removed, leaving the support member **1** with the sleeve **3** permanently attached at one end to the support member and at its opposite end to the clamp ring **4**. Next, the resilient sleeve **12**, which it is desired to stretch fit to the roll core **13**, is pulled over the sleeve **3** and support member **1**. One end **14** of the sleeve **12** is turned inwardly about the end of the support member **1** and sleeve **3**, and the adaptor ring **7** is then attached to the support member **1** by means of set screws (not shown); thereby clamping the end of the sleeve **12** to the end of the support member **1**. The opposite end **15** of the sleeve **12** is then turned outwardly and the clamp ring **5** moved into place against the clamp ring **4** with the end **15** of the sleeve between them and the two rings are secured together by means of the thumb screws **10**; thereby clamping the end **15** of the sleeve **12** between the two rings.

It will also be apparent that while the sleeve **3** has been described as permanently attached to the clamp ring **4** and one end of the support member **1**, the ends of the sleeve **3** could be clamped into position by means of the adaptor ring **7** and clamp ring **5** at the same time the ends of sleeve **12** are attached.

The rings **4** and **5** are now moved to the end of the support member **1** and the retaining bar **9** attached to ring

4 by means of thumb screws **11**. The retaining bar **9** may be notched as at **16**, to seat on the end of the support member **1**. The sleeve **12** now extends coextensively with the sleeve **3** and the adjacent ends of the two sleeves are now clamped together in sealing relationship to form a closed chamber between the two sleeves. A fluid, such as air, is then pumped through the valve opening **6** into the space between the two sleeves, slightly inflating the sleeve **12** so that the assembled sleeve and sleeve applying apparatus are in the configuration shown in the righthand side of FIGURE 2. The assembly is then moved into the position shown in FIGURE 2 with one of the adaptor tor ring **7** engaging one end of a roll core **13** which is to be covered. At this point, if desired, either or both the roll core surface and the exposed surface of the sleeve **12** may be coated with a suitable adhesive, such as a contact cement or the like, preparatory to advancing the sleeve **12** onto the roll core **13**. Since the sleeve **12** is supported with its core contacting surface facing outwardly, coating of the sleeve is a relatively simple operation.

As seen in FIGURE 3 the retaining bar **9** is then detached and the clamp rings **4** and **5** are moved to the left as seen in FIGURE 3 causing the sleeve **12** to turn inside out and advance evenly and smoothly onto the surface of the roll core **13**. Since the sleeve **12** is slightly inflated, fluid pressure uniformly presses the sleeve **13** at all points radially inwardly into engagement with the roll **13** as the sleeve is advanced; thereby preventing the occurrence of wrinkles, air pockets or the like. When the clamp rings **4** and **5** have been moved to the position shown in FIGURE 4 the sleeve **12** completely covers the core **13**. The clamp ring **5** may then be removed and the clamp ring **4** with one end of the sleeve **3** attached may now be moved back to the right as seen in FIGURE 4 and the retaining bar **9** once again attached to the clamp ring **4**. Both ends of the sleeve **12** are then trimmed flush with the ends of the roll core **13** and the applying apparatus removed, leaving the core **13** covered with the resilient sleeve **12**.

From the above description it will be seen that the present invention provides a method and apparatus which permits the covering of a roll core without the disadvantages characteristic of prior attempts in this field. While a preferred embodiment has been described in detail for purposes of illustration it will be apparent that modifications thereof will readily occur to those skilled in the art within the scope of the appended claims.

I claim:

1. A method of applying a first resilient sleeve to a core comprising:

(a) positioning said first sleeve in overlying relationship to a second resilient sleeve which is supported in substantially cylindrical configuration,

(b) uniformly expanding said first sleeve radially thereof,

(c) positioning one end of said first sleeve adjacent one end of said core, and

(d) reversely rolling said first sleeve into engagement with said core while maintaining said one end thereof adjacent said one end of said core and moving the opposite end of said sleeve toward the opposite end of said core.

2. The method of claim **1** wherein said step of uniformly expanding said first named sleeve comprises sealing adjacent ends of said sleeves to each other and admitting fluid under pressure between said sleeves.

3. The method of claim **2** further comprising reversely rolling said first named sleeve into engagement with said core while continuously maintaining all portions of said first named sleeve engaging said core under uniform, radially inwardly directed pressure.

4. The method of claim **3** further comprising continuing said reverse rolling of said first named sleeve into engagement with said core until said first named sleeve is turned substantially completely inside out.

5. The method of claim **4** further comprising coating the exposed surface of said first named sleeve with an adhesive subsequent to supporting said first named sleeve and prior to reversely rolling said first named sleeve.

6. Apparatus for applying a sleeve to a core comprising:

(a) a first sleeve,

(b) means for supporting said sleeve in substantially cylindrical configuration,

(c) means for attaching an end of a second sleeve to one end of said first sleeve in sealing relationship thereto,

(d) means for attaching an opposite end of said second sleeve to an opposite end of said first sleeve in sealing relationship thereto, and

(e) means for admitting fluid under pressure between said first and second sleeves.

7. The apparatus of claim **6** wherein said first named attaching means comprises an adaptor ring for clamping said ends of said sleeves against a corresponding end of said supporting means.

8. The apparatus of claim **7** wherein said second named attaching means comprises a pair of mating clamping rings for clamping said opposite ends of said sleeves therebetween.

9. The apparatus of claim **8** wherein said clamping rings are of greater internal diameter than the external diameter of said supporting means.

10. The apparatus of claim **9** wherein said fluid admitting means comprises a valved aperture formed in one of said clamping rings.

References Cited

UNITED STATES PATENTS

2,366,359	1/1945	Searle	29—421 X
2,803,056	8/1957	Brissey et al.	29—450
3,050,786	8/1962	St. John et al.	29—235
3,081,495	3/1963	Kovatch.	

THOMAS H. EAGER, *Primary Examiner.*

U.S. Cl. X.R.

29—235, 421, 450