PUMP FOR LIQUID CONTAINERS

Filed June 4, 1963 2 Sheets-Sheet 1

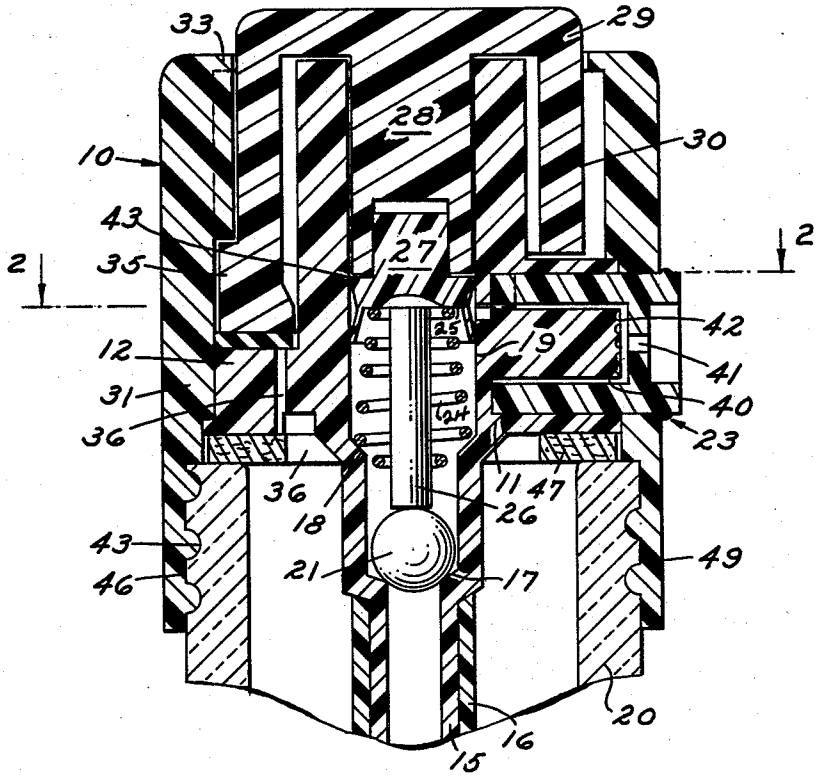

FIG. 1

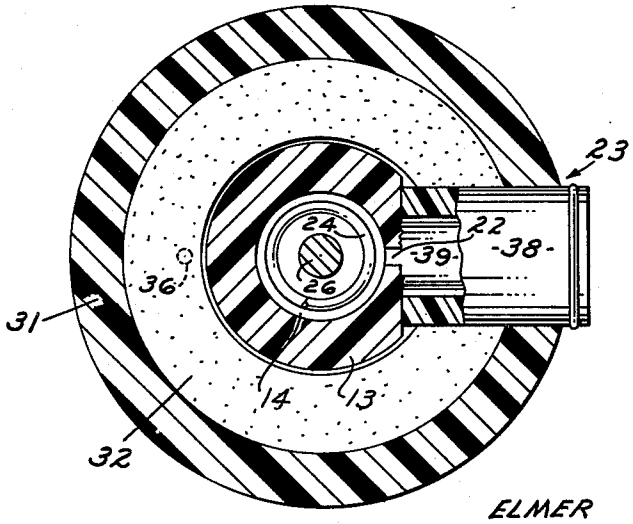

FIG. 2

INVENTOR.
ELMER LIPMAN
BY
William R. Sevald
ATTORNEY

PUMP FOR LIQUID CONTAINERS

Filed June 4, 1963 2 Sheets-Sheet 2

FIG. 3

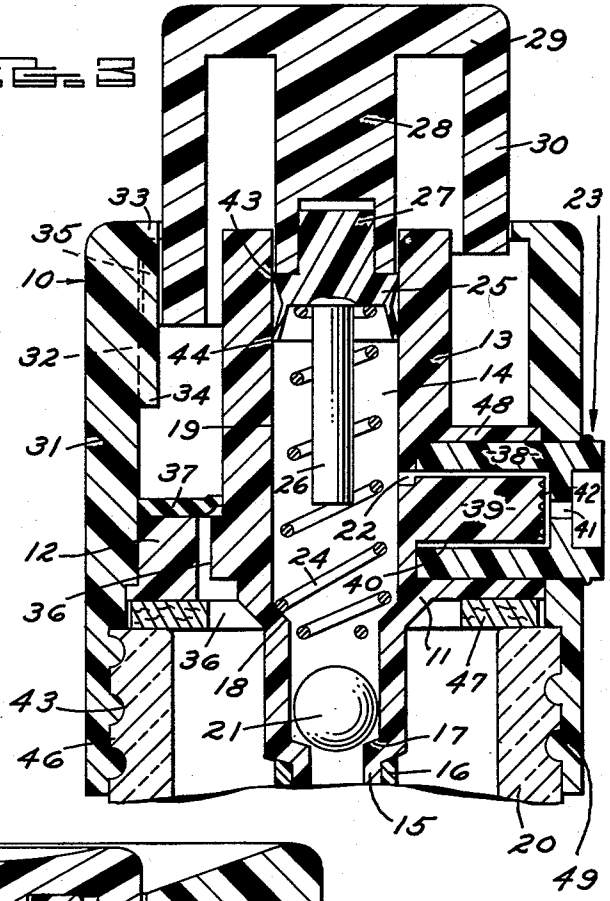

FIG. 4

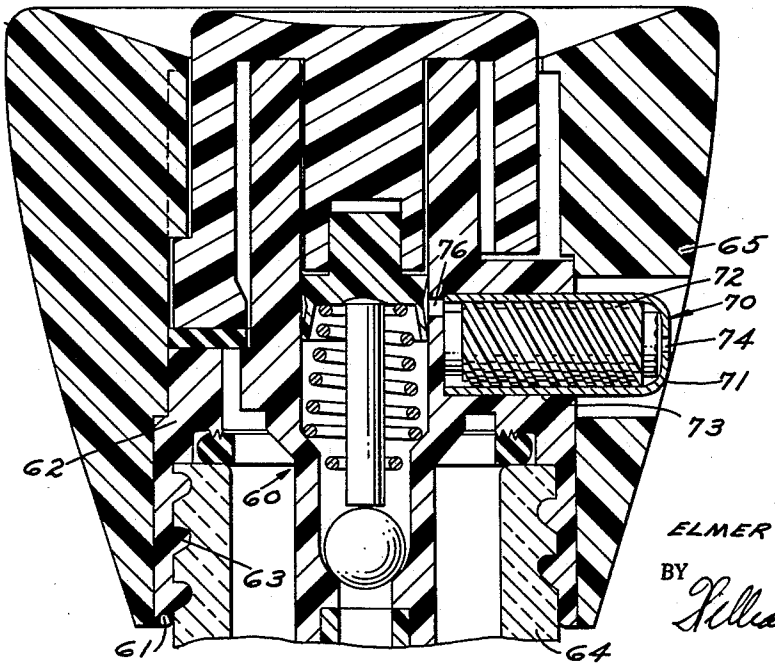

INVENTOR.
ELMER LIPMAN
BY William R. Sevald
ATTORNEY

United States Patent Office

3,185,355

Patented May 25, 1965

1

3,185,355
PUMP FOR LIQUID CONTAINERS

Elmer Lipman, South Lyon, Mich., assignor to Valve Corporation of America, Bridgeport, Conn., a corporation of Delaware

Filed June 4, 1963, Ser. No. 285,418
8 Claims. (Cl. 222—341)

This invention relates to a pump for liquid containers having closure and dispenser characteristics. The pump has means for sealing a liquid container for shipping and storage and means for emitting incremental portions of liquid as a dispenser.

Various devices have been developed in the prior art in an attempt to provide a dispenser-closure pump mountable on a cap which would both seal the container and dispense the liquid contents of the container. However, these devices were not satisfactory from a commercial standpoint due to the fact that the liquid contents of the container leaked out and air leaked into the containers causing evaporation. In other words, the devices of the prior art did not seal satisfactorily for commercial shipping and storage.

With the foregoing in view, the primary object of the invention is to provide a closure-dispenser pump for a liquid container which is capable of sealing the liquid in the container and sealing air out of the container when not used as a dispenser.

An object of the invention is to provide means for locking the dispensing pump in a sealing position for shipping, storage, and non-use periods.

An object of the invention is to provide sealing means associated with the cap and pump structure so that when the pump structure is placed in the locked position the apertures communicating liquid to use and the orifice communicating atmospheric pressure to the interior of a container are sealed off preventing liquid from leaking from the container and preventing air from entering the container.

An object of the invention is to provide means for sealing the pump chamber between the piston and ball check valve to isolate the liquid in the pump chamber relative to both the container and apertures leading to atmosphere.

An object of the invention is to provide a liquid friction restriction in the nozzle portion leading from the pump chamber to atmosphere so as to block atmospheric communication to the pump chamber during the return suction stroke of the piston to fill the pump chamber with liquid from the container.

These and other objects of the invention will become apparent by reference to the following description of preferred embodiments of the invention taken in connection with the accompanying drawings in which:

FIG. 1 is a longitudinal cross-sectional view of a pump embodying the invention shown mounted on the neck of a container with the container broken away illustrating the sealed condition.

FIG. 2 is a cross-sectional view of FIG. 1 taken on the line 2—2 thereof.

FIG. 3 is a view similar to FIG. 1 showing the device in the unsealed and ready to dispense condition; and

FIG. 4 is a longitudinal cross-sectional view of a modified embodiment of the closure-dispenser pump showing the device in the sealed condition.

Referring now to the drawings where like numerals refer to like and corresponding parts throughout several views, the sealing-dispensing pumps disclosed therein to illustrate the invention comprise a pump mounted on a closure cap for liquid containers capable of sealing the container for shipping, storage, and other periods of non-use, and capable of dispensing liquid from the container in incremental portions for use.

2

The pump includes a pump chamber communicating with the liquid in the container, a button for operating the pump to draw liquid from the container and to deliver incremental portions of liquid to use. The pump has means for sealing the liquid dispensing aperture and pump chamber, sealing means for sealing the vacuum break breather orifice leading to the container, and means for locking the device in a sealed condition during idle periods.

More particularly, the cap **10** comprises a central body **11** having a radial flange **12** and annular axial walls attached to the radial flange **12** forming an internal pumping chamber **14**.

The annular walls **13** include a hollow stem **15** for attachment to a dip tube **16**, a ball seat **17** above the stem **15**, a spring shelf **18** spaced above the ball seat **17**, and a cylinder **19** rising above the spring shelf **18**.

Liquid from a container **20** leads through the dip tube **16** past a ball **21** on the seat **17** and channels into the cylinder **19**. An aperture **22** in the side wall of the cylinder **19** emits liquid from the cylinder to the nozzle **23**.

A spring **24** lies in the cylinder **19** and has a lower end resting on the spring shelf **18**. A piston **25** lies in the cylinder **19** in contact with the upper end of the spring **24**. The spring **24** resiliently urges the piston **25** upwardly in the cylinder **19** so as to be manually depressible downwardly. The boss **26** on the piston **25** lies within the spring **24**. In the down position of the piston **25**, the boss **26** contacts the ball **21** and sealably forces it against the seat **17**. This seals the container and the cap at the dip tube connection.

The piston **25** has a head **27** interfitting with a plunger **28** which is surmounted by a button **29** leading to and supporting the annular wall **30**.

An outer sleeve **31** surrounds the central body **11** and is connected to the central body radial flange **12**. The outer sleeve **31** is equipped with a bayonet slot **32**, a bayonet upper stop **33**, and a bayonet lower stop **34**. The button wall **30** has a bayonet lug co-acting with the bayonet stops **33** and **34** and the bayonet slot **32** of the sleeve **31**.

In the position shown in FIG. 3, the bayonet lug **35** contacts the upper bayonet slot **33** and lies in the bayonet slot **32**. This is the operative dispenser use position.

In the position shown in FIG. 1, the bayonet lug **35** on the button has been rotated angularly from the position seen in FIG. 3 so as to lie under the bayonet lower stop **34** on the sleeve **31**. This latches the button in the sealing position.

Reverse angular movement of the button **29** locates the lug **35** in alignment with the bayonet slot **32** permitting the button to move to the up position shown in FIG. 3. The button moves to the position in FIG. 3 after angular movement aligning the lug **35** with the slot **32** by the force of the spring **24**.

The piston **25** has an upper bead **43** sealing against the cylinder **19** in the upstroke and a lower bead **44** sealing against the cylinder in the downstroke.

In the locked down position of the device the piston **25** lies radially of the aperture **22** with the piston beads **43** and **44** sealing off the aperture **22**.

A vacuum break breather orifice **36** is formed in the central body radial flange **12** and communicates at its lower end with the interior of the container **20** and at its upper end with atmosphere between the button walls **30** and the sleeve **31**. The flap seal **32** is disposed over the upper end of the orifice **36** for sealing the orifice in the pump locked position.

The button wall **30** presses against the flap seal **32** in the locked down position forcing the seal **32** against the vacuum break orifice **36** to positively seal off the orifice

thereby preventing liquid from the container emitting through the orifice and air from atmosphere from entering the container.

The nozzle 23 has an outer shell 38 and an inner core 39 in close but spaced relationship thereto. The space 40 between the shell 38 and the core 39 is in communication with the liquid delivery aperture 22 in the cylinder 19 of the central body 11. The space 40 also communicates with the nozzle jet 41 which leads directly to atmosphere. The interior of the shell 38 and/or the exterior of the core 39 are serrated such as with helical grooves or flutes so as to force liquid traveling in the space 40 to travel in a circular path to impart a swirling action to the fluid as it emits from the jet 41.

In the embodiment shown in FIGS. 1–3, it will be noted that the outer sleeve 31 depends below the central body radial flange 12 and is equipped with threads 45 for coacting with threads 46 on the container 20 to attach the cap 10 on the container 20. A sealing washer 47 seals between the radial flange 12 and the top of the container 20. Also in the embodiments of FIGS. 1–3 it is to be noted that the nozzle core 39 is formed integral with the central body 11 and that the central body 11 has an annular socket formed by the annular axial flanges 48 for receiving the nozzle shell 38 in concentric spaced relationship to the nozzle core 39.

Referring now to the embodiment seen in FIG. 4, it will be noted that a central body 60 has an annular flange 61 depending from a radial flange 62. The body annular flange 61 is equipped with threads 63 directly connecting the body 60 to a container 64. An outer sleeve 65 fits over the central body annular flange 61 and radial flange 62. The outer sleeve 65 is equipped with the bayonet slots and upper and lower stops as previously described relative to the outer sleeve 31.

The nozzle 70, FIG. 4, comprises an outer shell 71 and a fluted inner core 72. The central body 60 has an annular socket 73 receiving the nozzle 70 and it is to be noted that the interior of the shell 71 is in communication with the fluid delivery aperture 76. Fluid received from the aperture 76 flows between the shell 71 and the core 72 in the space provided between the flutes of the core 72. The fluid emits from the nozzle 70 through a jet 74. In this instance the core 72 is formed separate from the central body 60. The operation of the device shown in FIG. 4 as well as its locked sealed condition will be understood from the description of the embodiments shown in FIGS. 1–3.

In assembling the device of the invention, the ball 21, spring 24, and piston 25 are inserted in the central body 11. The button 29 is then placed over the central body 11 with the plunger 28 in contact with the piston head 27. The flap seal 37 is inserted between the button 29 and the body radial flange 12. The outer sleeve 31 is then passed over the button 29 and pressed into engagement with the body radial flange 12. The dip tube 16 is fixed on the body attaching means 15. The container 20 is filled with liquid. The sealing washer 47 is inserted within the skirt 49 and the threads 45 are turned on the container threads 46 locking the cap 10 on the container 20.

The button 29 is then depressed and turned angularly to locate the lugs 35 below the lower stops 34. This moves the button walls 30 in contact with the flap seal 37 closing off the vacuum break breather orifice 36. This also depresses the piston 25 and locates it in a position so that its boss 26 presses against the ball 21 forcing the ball 21 against the seat 17 in a sealed condition. The depressed position of the piston 25 also locates the cylinder radially opposite the liquid delivery aperture 22 with the piston upper bead 43 and the piston lower bead 44 on either side of the aperture 22 isolating it from the chamber 14 closing off communication of air and liquid. It closes off communication of air to the cylinder 14 and it closes off communication of liquid from the cylinder 14 to atmosphere through the nozzle 23.

The container with the pump and cap in the down locked position is sealed for storage and shipment.

Upon a user obtaining the sealed container, he presses downwardly on the button 29 at the same time turning the button 29 angularly so as to move the lugs 35 from a position lying under the bottom stops 34 to a position in alignment with the bayonet slots 32. Upon release of the button 29, the spring 24 raises the piston 25 and button 29. Upon the piston 25 and button 29 being raised, the piston boss 26 moves out of engagement with the ball 21 and the piston 25 moves out of sealing alignment with the outlet aperture 22. The button walls 30 also move off the flap seal 37 permitting air to pass from the button area thru the vacuum break breather orifice 36 into the container 20.

The user then depresses the button 29 rapidly a few times to activate the device to fill the chamber 14 with liquid. Upon activation of the device, the manual downward movement of the button 29 moves the plunger 28 and piston 25 downwardly against the fluid in the chamber 14 which seats the ball 21 on the seat 17 preventing fluid in the chamber 14 from emitting back to the container at the ball 21. Upon further downward movement of the piston 25 fluid in the chamber 14 moves through the outlet aperture 22 into the space 40 between the nozzle core 39 and the shell 38 whereupon it is swirled and emitted through the jet 41 in a particulated spray.

Upon the piston 25 achieving its farthest downward position such as seen in FIG. 1, the user permits the button 29 to rise. Releasing pressure on the button 29 permits the button 29, plunger 28, piston 25, to move upwardly in the chamber 14 under power of the spring 24. This hydraulically pulls the ball 21 upwardly off the seat 17 and draws liquid from the container 20 through the dip tube 16 filling the chamber 14. The space 40 between the nozzle core 39 and nozzle shell 38 is so obstructed with fluid and residual liquid in frictional contact with the walls that any suction at the delivery aperture 22 is resisted by the liquid friction restriction in the nozzle 23. This provides that air is not drawn into the chamber 14 by the rise of the piston and assures that liquid is drawn into the chamber 14 by the rise of the piston.

Upon the user emitting the desired quantity of liquid through the nozzle, he depresses the button 29 to the bottom position shown in FIG. 1 and turns the button 29 angularly to dispose the button bayonet lugs 35 under the lower stops 34 on the outer shell 31. This locks the button 29 and piston 25 in the down position with piston boss 26 pressing against the ball 21 forcing it against the seat 17. In this position, the piston upper and lower beads 43 and 44 lie on either side of the delivery or aperture 22 sealing it off. Also in this downward locked position the annular walls 30 on the button 29 are in pressed relationship with the flap seal 37 urging it into sealing relationship with the vacuum break orifice 36 sealing off the interior of the container in communication therewith.

It is to be understood that the pump devices are shown in enlarged proportion in the figures. The devices are particularly suited for cosmetic, perfume, lighter fluid, oil, and the like in relatively small size which can be envisioned when it is to be understood that the dip tube 16 usually has an internal opening of about 3/32 of an inch. The other parts are in the same proportion. While the devices of the invention are particularly suited for small compact embodiments, it is obvious that larger embodiments can easily be made, such as for the sealing and dispensing of liquid detergents, soaps, etc.

While only two embodiments of the novel pump have been shown and described in detail, it is obvious that many changes may be made in the size, shape, detail, ar-

rangement of the various elements in the invention within the scope of the appended claims.

I claim:

1. A closure-dispenser pump device for liquid containers capable of sealing a container for shipping and storage and dispensing liquid from a container in incremental portions for use comprising,

a body having a radial flange and axial walls forming an internal cylinder including an upper piston chamber, an intermediate spring shelf, a lower valve seat for a ball check valve, and dip tube connecting means; said body having a liquid outlet aperture leading from said chamber to atmosphere;

a dip tube on said body,

a ball on said valve seat,

a spring having a lower end on said shelf spaced above said ball; said spring having an upper end extending into said chamber;

said ball being capable of moving off said seat toward said spring lower end to open said chamber to the interior of a container through said dip tube and capable of sealing against said seat to close off said chamber relative to the interior of a container,

a piston in said chamber contacting said spring upper end,

said piston being displaceably urged upwardly in said chamber by said spring;

an operator button on side body above said piston having a plunger contacting said piston for depressing said piston against said spring in said chamber, a head for finger operation, an outer annular wall, and at least one bayonet lug on said wall,

an outer sleeve around said body secured to said body radial flange having bayonet slots and stops cooperating with said bayonet lugs on said annular wall of said operator button for locking said button in a down position, limiting said button up position, and permitting said button to move up and down between said up and down positions,

one said body and sleeve having a lower skirt equipped with means for attaching said device on a container,

a washer in said skirt below said body flange for sealing between a container top and said body radial flange,

a vacuum break breather orifice in said flange radially inside said sealing washer for communicating atmospheric pressure to the interior of a container,

a flap seal above said body flange lying over said vacuum break orifice normally not sealably pressed thereagainst,

said operator button wall when locked down sealably pressing said flap seal against said vacuum break orifice to seal off the interior of a container in communication with said orifice;

said operator button when locked down holding said plunger and said piston in the down position;

said piston lying radially opposite said outlet aperture in said cylinder chamber in the locked down position sealing off said aperture preventing communication from said cylinder chamber to atmosphere;

said button when not locked down being moved to the up position by said spring raising said piston against said plunger;

manually depressing said button moving said piston downwardly in a compression stroke hydraulically seating said ball on said seat closing said cylinder relative to a container and pumping liquid in said cylinder through said outlet aperture;

manual release of said button permitting said spring to move said piston upwardly in a suction stroke which raises said ball hydraulically off said seat and draws liquid from a container into said cylinder chamber to replenish supply in said cylinder chamber;

said piston having an axial depending stem pressing said ball against said seat in the locked down position; and

means on said cap at said outlet aperture for projecting the pumped portion of liquid to use.

2. A closure-dispenser pump device for liquid containers capable of sealing a container for shipping and storage and dispensing liquid from a container in incremental portions for use comprising,

a body having a radial flange and axial walls forming an internal cylinder including an upper piston chamber, an intermediate spring shelf, a lower valve seat for a ball check valve, and dip tube connecting means; said body having a liquid outlet aperture leading from said chamber to atmosphere;

a dip tube on said body,

a ball on said valve seat,

a spring having a lower end on said shelf spaced above said ball; said spring having an upper end extending into said chamber;

said ball being capable of moving off said seat toward said spring lower end to open said chamber to the interior of a container through said dip tube and capable of sealing against said seat to close off said chamber relative to the interior of a container,

a piston in said chamber contacting said spring upper end,

said piston being displaceably urged upwardly in said chamber by said spring;

an operator button on side body above said piston having a plunger contacting said piston for depressing said piston against said spring in said chamber, a head for finger operation, an outer annular wall, and at least one bayonet lug on said wall,

an outer sleeve around said body secured to said body radial flange having bayonet slots and stops cooperating with said bayonet lugs on said annular wall of said operator button for locking said button in a down position, limiting said button up position, and permitting said button to move up and down between said up and down positions.

means for attaching said device on a container,

a vacuum break breather orifice in said flange for communicating atmospheric pressure to the interior of a container,

a flap seal above said body flange lying over said vacuum break orifice normally not sealably pressed thereagainst,

said operator button wall when locked down sealably pressing said flap seal against said vacuum break orifice to seal off the interior of a container in communication with said orifice;

said operator button when locked down holding said plunger and said piston in the down position;

said piston lying radially opposite said outlet aperture in said cylinder chamber in the locked down position sealing off said aperture preventing communication from said cylinder chamber to atmosphere;

said button when not locked down being moved to the up position by said spring raising said piston against said plunger;

manually depressing said button moving said piston downwardly in a compression stroke hydraulically seating said ball on said seat closing said cylinder relative to a container and pumping liquid in said cylinder through said outlet aperture;

manual release of said button permitting said spring to move said piston upwardly in a suction stroke which raises said ball hydraulically off said seat and draws liquid from a container into said cylinder chamber to replenish supply in said cylinder chamber; and

means on said cap at said outlet aperture for projecting the pumped portion of liquid to use.

3. A closure-dispenser pump device for liquid containers capable of sealing a container for shipping and

storage and dispensing liquid from a container in incremental portions for use comprising,

a body having a radial flange and axial walls forming an internal cylinder including an upper piston chamber, a spring shelf, a valve seat for a ball check valve, and a dip tube;

said body having a liquid outlet aperture leading from said chamber to atmosphere;

a ball on said valve seat;

a spring having lower end on said shelf;

said spring having an upper end extending into said chamber;

said ball being capable of moving off said seat to open said chamber to the interior of a container through said dip tube and capable of sealing against said seat to close off said chamber relative to the interior of a container,

a piston in said chamber contacting said spring upper end,

said piston being displaceably urged upwardly in said chamber by said spring;

an operator button on said body above said piston having a plunger contacting said piston for depressing said piston against said spring in said chamber, a head for finger operation, an outer annular wall,

an outer sleeve around said body secured to said body radial flange having means for cooperating with said operator button for locking said button in a down position, limiting said button up position, and permitting said button to move up and down between said up and down positions,

means for attaching said device on a container,

a vacuum break breather orifice in said flange for communicating atmospheric pressure to the interior of a container,

a flap seal above said body flange lying over said vacuum break orifice normally not sealably pressed thereagainst,

said operator button wall when locked down sealably pressing said flap seal against said vacuum break orifice to seal off the interior of a container in communication with said orifice;

said operator button when locked down holding said plunger and said piston in the down position;

said piston lying radially opposite said outlet aperture in said cylinder chamber in the locked down position sealing off said aperture preventing communication from said cylinder chamber to atmosphere;

said button when not locked down being moved to the up position by said spring raising said piston against said plunger;

manually depressing said button moving said piston downwardly in a compression stroke hydraulically seating said ball on said seat closing said cylinder relative to a container and pumping liquid in said cylinder through said outlet aperture;

manual release of said button permitting said spring to move said piston upwardly in a suction stroke which raises said ball hydraulically off said seat and draws liquid from a container into said cylinder chamber to replenish supply in said cylinder chamber; and

means on said cap at said outlet aperture for projecting the pumped portion of liquid to use.

4. A closure-dispenser pump device for liquid containers capable of sealing a container for shipping and storage and dispensing liquid from a container in incremental portions for use comprising,

a body having a radial flange and axial walls forming an internal cylinder including an upper piston chamber, a spring shelf, and a valve seat for a ball check valve,

said body having a liquid outlet aperture leading from said chamber to atmosphere;

a ball on said valve seat;

a spring having a lower end on said shelf;

said spring having an upper end extending into said chamber;

said ball being capable of moving off said seat to open said chamber to the interior of a container and capable of sealing against said seat to close off said chamber relative to the interior of a container,

a piston in said chamber contacting said spring upper end,

said piston being displaceably urged upwardly in said chamber by said spring,

an operator button on said body above said piston having a plunger contacting said piston for depressing said piston against said spring in said chamber, a head for finger operation and an outer annular wall:

an outer sleeve around said body secured to said body radial flange having means for cooperating with said operator button for locking said button in a down position, limiting said button up position, and permitting said button to move up and down between said up and down positions,

means for attaching said device on a container,

said operator button when locked down holding said plunger and said piston in the down position;

said piston lying radially opposite said outlet aperture in said cylinder chamber in the locked down position sealing off said aperture preventing communication between said cylinder chamber and atmosphere;

said button when not locked down being moved to the up position by said spring raising said piston against said plunger;

manually depressing said button moving said piston downwardly in a compression stroke hydraulically seating said ball on said seat closing said cylinder relative to a container and pumping liquid in said cylinder through said outlet aperture;

manual release of said button permitting said spring to move said piston upwardly in a suction stroke which raises said ball hydraulically off said seat and draws liquid from a container into said cylinder chamber to replenish supply in said cylinder chamber.

5. A dispensing pump and closure construction for mounting on the neck of a liquid container comprising, in combination:

(*a*) a cylinder

(*b*) a manually operable plunger movable from and to a storage position, said plunger including a piston reciprocable in the cylinder,

(*c*) said cylinder having a discharge outlet,

(*d*) means connected with the cylinder, providing an air inlet channel for directly admitting air to the space above the liquid in the container, and

(*e*) means controlled by said plunger, for closing said air inlet channel and simultaneously closing said discharge outlet when the plunger is in said storage position, thereby to prevent leakage from the container through said pump and closure construction.

6. A construction as in claim 5, wherein:

(*a*) the means closing the discharge outlet comprises the said piston.

7. A construction as in claim 5, wherein:

(*a*) the means providing the air inlet comprises a flange cooperable with the lip of the container, having an air aperture through it,

(*b*) said means closing the air inlet comprising a shoulder on the plunger, cooperable with said flange when the plunger is in storage position.

8. A dispensing pump and closure construction for mounting on the neck of a liquid container comprising, in combination:

(*a*) a cylinder having walls,

(*b*) a manually operable plunger movable from and to a storage position, said plunger including a piston engaging said walls and reciprocable in the cylinder,

(*c*) said cylinder having a discharge outlet,

(*d*) a check valve at one end of the cylinder, spaced from said discharge outlet and adapted to allow liquid from the container to enter the cylinder,

(*e*) said piston engaging the cylinder walls only at a location between said check valve and discharge outlet when the plunger is in storage position to isolate liquid in the cylinder from the container and from the outlet for said plunger position.

References Cited by the Examiner

UNITED STATES PATENTS

1,039,933	10/12	Hamberger	222—384 X
1,982,497	11/34	Cotchett	222—321 X
2,301,051	11/42	King	222—384 X
2,568,057	9/51	Cotter	221—321 X
2,846,124	8/58	Stewart et al.	222—384 X
2,956,509	10/60	Cooprider et al.	222—384 X

LOUIS J. DEMBO, *Primary Examiner.*

HADD S. LANE, *Examiner.*