Nov. 1, 1955 H. V. DREFVELIN 2,722,063

PERFORATE INSOLE FOR SHOES

Filed Feb. 2, 1954

FIG.1

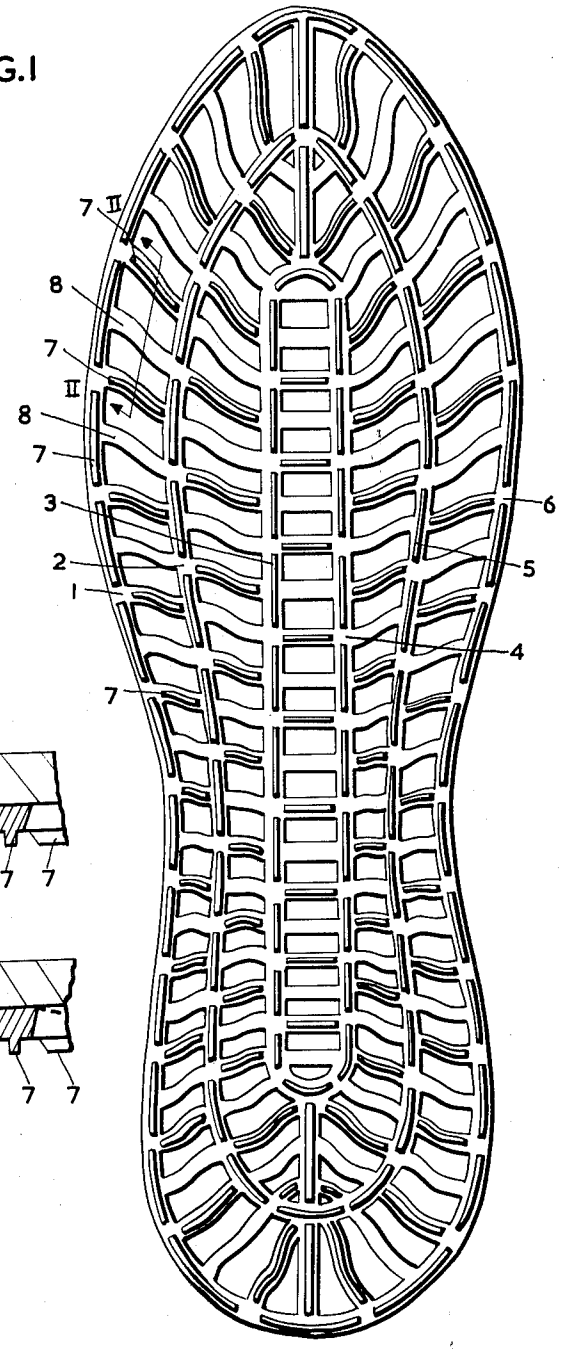

FIG.2

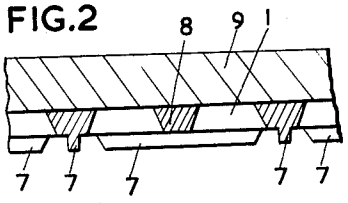

FIG.3

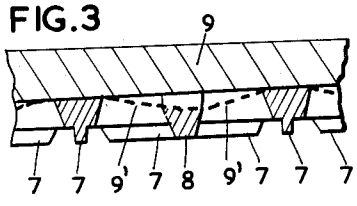

HENRIK VILHELM DREFVELIN
INVENTOR
By Richardson, David and Morton
his ATTYS

United States Patent Office

2,722,063

Patented Nov. 1, 1955

2,722,063

PERFORATE INSOLE FOR SHOES

Henrik Vilhelm Drefvelin, Oslo, Norway

Application February 2, 1954, Serial No. 407,727

Claims priority, application Norway April 24, 1953

2 Claims. (Cl. 36—3)

This invention relates to insoles for shoes and of the type which are provided with a series of perforations in the face of the insole.

The object of the invention is to provide a construction of insole which will prevent or reduce dampness in shoes. Thus, an insole made in accordance with the invention may be especially useful when used with shoes, for example rubber shoes, of the type in which it is difficult to avoid dampness within the shoe.

The invention provides a special construction of insole which includes within the insole a series of small pumping chambers acting, during the use of the shoe, as air pumps which act to circulate air through the perforations of the insole below the foot.

According to the invention a perforated insole for shoes comprises a network of intercrossing longitudinal and transverse ribs, the outer ends of the ribs on the side of the insole nearer to the foot being situated substantially in one and the same plane, whereas the outer ends of the ribs on the side of the insole away from the foot have alternating higher and lower portions, in such a manner that the higher portions normally abut against the shoe bottom, whereas the lower portions, when loaded by the pressure of the foot against the insole, are pressed down against the shoe bottom, thus providing for a pumping action with subsequent air circulation, when the shoe is used for walking.

The insole of the invention may be considered as being subdivided into a number of pumping chambers bordered by the higher portions of the ribs, each pumping chamber being divided transversely by a rib of lower profile. When the insole is loaded by the pressure of the foot against the insole, the rib of the lower profile is pressed down against the shoe bottom, but as soon as the pressure discontinues during walking, the rib of the lower profile flexes back again, whereby circulation of air is obtained.

In order that the invention may be easily understood, it will be described with reference to the drawing, which illustrates by way of example an embodiment of the invention.

In the drawing,

Fig. 1 is an underplan of an insole according to the invention,

Fig. 2 is a section taken along line II—II of Fig. 1, in a non-loaded condition of the insole, and to a larger scale than Fig. 1 and also diagrammatically indicating the foot of the user, and

Fig. 3 is a similar section along line II—II of Fig. 1, but in a loaded condition of the insole.

The insole shown in Fig. 1 may consist of any suitable resilient material, for example of rubber or of thermosetting or thermoplastic material, and is built up from a series of longitudinal ribs **1**, **2**, **3**, **4**, **5**, **6**, interconnected by a considerable number of transverse complementary ribs.

The distance between adjacent single ribs, which together form the insole, may of course, be chosen differently, and it is a matter of choice how many ribs, longitudinal as well as transverse, are to be chosen.

The upper side of the insole not seen on Fig. 1, has transverse and longitudinal ribs whose outer surfaces are situated in a common plane. On the side seen in Fig. 1, that is the underside, however, the ribs are provided with alternating higher portions **7**, indicated on the drawing by thick, black lines, and the lower portions **8**, shown without such thick, black lines. It will be appreciated that the higher portions in fact extend to a position lower than the lower portion.

Thus, the entire insole can be regarded as subdivided into chambers bordered by higher portions **7**, and each of these chambers is divided into two parts by means of the lower ribs **8**.

Fig. 2 shows the section taken along line II—II of Fig. 1. Taken from the left there is first a portion **7** of a rib of high section, thereafter a portion **8** of a rib of low section and then again a portion **7** of high section. The figure also shows part of the longitudinal rib **1**, and the foot is resting upon the insole as diagrammatically indicated by **9**.

When the foot **9** exerts a pressure against the insole, the low rib **8** is pressed down against the shoe bottom, as illustrated by Fig. 3. The under-face **9'** of the foot accordingly will act as a pump diaphragm to reduce the volume of the space bordered by the portions **7** of high cross-section surrounding the space. The air confined within an area bordered by the portions of high cross-section accordingly is pumped out, and as soon as the pressure of the foot against the sole is relieved, for example when the foot is lifted from the ground during walking, the low portion **8** will flex back to the place shown on Fig. 2, whereby a suction is obtained, and new air is drawn into said chamber.

Thus, during walking, air is pumped out of and drawn into the several chambers of the sole, which prevents formation of dampness beneath the foot.

I claim:

1. A perforated insole for footwear comprising a flexible body composed of a net work of flat longitudinal and transverse ribs, defining openings extending through the body, the surfaces of said ribs on one side of the body continuing into each other in the same plane to provide a smooth foot-engaging surface, and protruding elongated ribs on the opposite shoe-engaging surface of the body formed upon alternate transverse ribs so as to provide alternating high and low surface portions throughout the body, the high surface portions normally resting upon the sole of the shoe, and the low surface portions being normally spaced above the sole of the shoe, thereby providing a plurality of separate air chambers communicating with the atmosphere through said openings, whereby upon compression and expansion of the ribs during walking air is pumped over the sole of the foot of the wearer of the shoe.

2. A removable perforated insole for shoes comprising a flat flexible cellular body of a contour similar to the contour of the wearing sole of a shoe, said body being formed of a continuous rib extending around the periphery thereof, elongated closed looped ribs spaced inwardly of the peripheral rib and extending lengthwise of the body, and ribs extending across the spaces between said peripheral rib and the adjacent looped rib and between and across said looped ribs, said ribs defining openings extending through the body, the surfaces of said ribs on one side of the body continuing into each other in the same plane so as to provide a smooth flat foot-engaging surface, and elongated outwardly protruding ribs on the opposite side of the body formed upon alternate cross ribs and upon the peripheral and looped ribs at spaced intervals therealong, said protrud-

ing ribs and the portions of the body ribs therebetween forming alternate high and low surface portions, the high surface portions normally resting upon the sole of the shoe and the low surface portions being normally spaced above the sole of the shoe, thereby providing a plurality of separate air chambers communicating through the openings with the atmosphere, whereby upon compression and expansion of the ribs during walking air is pumped over the sole of the foot of the wearer of the shoe.

References Cited in the file of this patent

UNITED STATES PATENTS

55,247	Daggett	June 5, 1866
429,429	Eckhardt	June 3, 1890
1,994,681	Blumenfeld	Mar. 19, 1935
2,327,361	Margolin	Aug. 24, 1943