Nov. 22, 1949 H. ORNER 2,488,553

HAIR DRYING APPARATUS

Filed Jan. 29, 1947

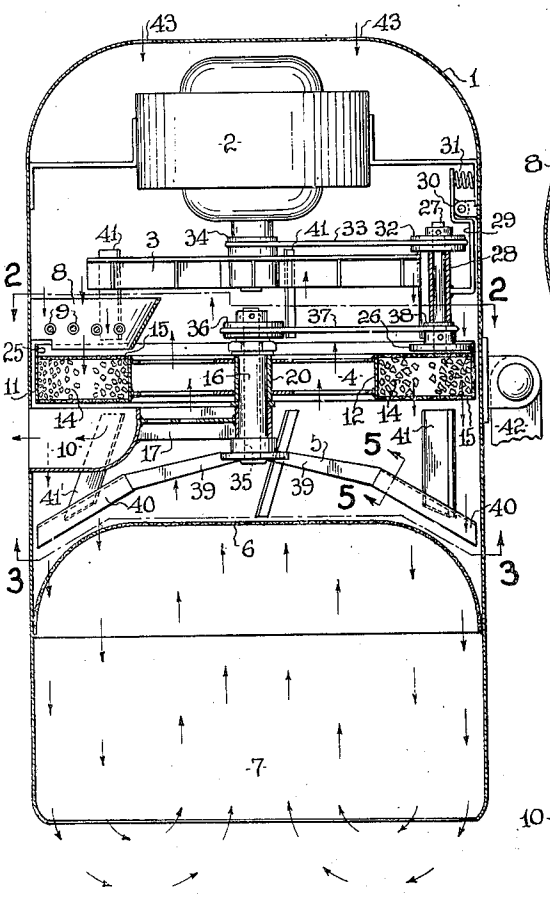

FIG. 1

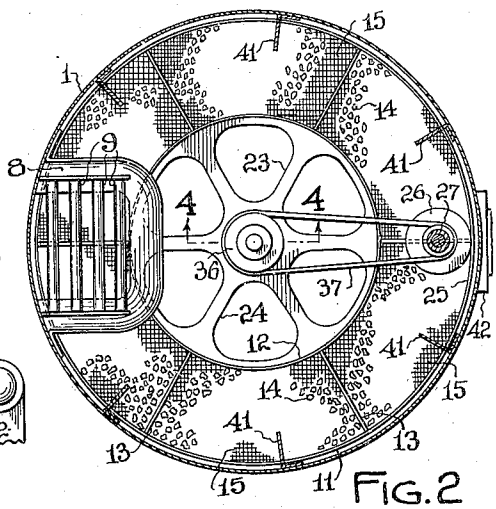

FIG. 2

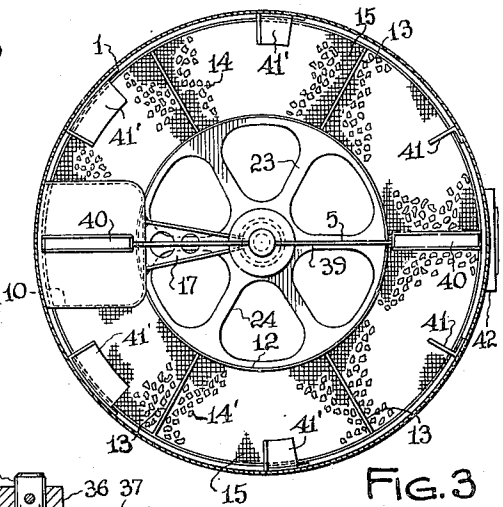

FIG. 3

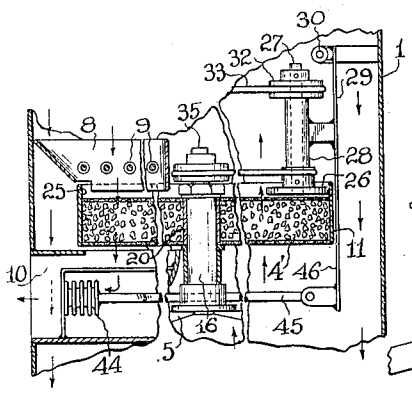

FIG. 7

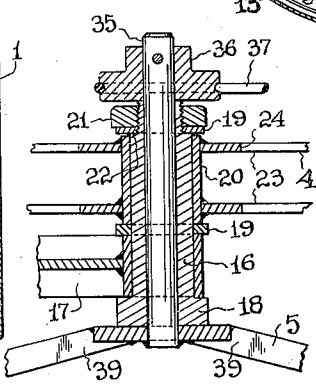

FIG. 4

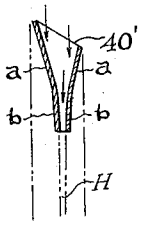

FIG. 6

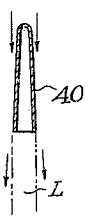

FIG. 5

INVENTOR

Harry Orner

Patented Nov. 22, 1949 2,488,553

UNITED STATES PATENT OFFICE

2,488,553

HAIR DRYING APPARATUS

Harry Orner, Cleveland Heights, Ohio

Application January 29, 1947, Serial No. 725,027

3 Claims. (Cl. 34—80)

1

This invention relates to hair drying apparatus and particularly to such hair drying apparatus using dried air.

Drying hair conventionally consists of raising the temperature of circulated air to heat the moisture in the hair to thereby increase the rate of evaporation. However such rate of drying is relative to the hygrometric state, a quantity which may be expressed as the ratio of the mass of water vapor present per unit volume of air, to the mass of water vapor which would be required to saturate per unit volume of air if the temperature remains constant. Raising of the temperature requires more water vapor to produce saturation. If the atmosphere is saturated, particularly on hot humid summer days, the raising of the temperature is the only means of getting any evaporation, and any increase of heat is very uncomfortable. Furthermore the evaporation rate is so slow as to take a relative long sitting period for the person.

In this invention the process of drying hair is relatively independent of the hygrometric state of the atmosphere and does not totally rely on the evaporation of the moisture in the hair by heat. Furthermore, in dressing hair, a solution is used causing the hair to cohere. It has been found that this solution will dry on the surface hair preventing the circulated air reaching the underlying hair. In this invention I further provide means to overcome this, and to permit the circulated air to dry the underlying hair.

The primary object of this invention is to provide a hair drying apparatus to efficiently dry hair, but which obviates all of the aforesaid difficulties and disadvantages.

More specifically, it is an object of this invention to provide a hair drying apparatus to dry hair with the least discomfort to the person.

Another object of this invention is to increase the rate of drying hair.

Another object of this invention is to prevent coherence of the hair to permit drying below the surface hair.

Another object of this invention is to dry hair with the maximum independence to the hygrometric state of the atmosphere.

Another object of this invention is to provide a fully automatic drying system using an adsorbing mechanism to dry air for drying, and to reactivate the adsorbing mechanism at the same time.

Another object of this invention is to dry hair with the least amount of heat directed on the hair.

2

Other objects and advantages of this invention will be apparent during the course of the following description.

In the accompanying drawings, forming a part of this specification, and in which like numerals are employed to designate like parts throughout the same.

Fig. 1 is a longitudinal cross-sectional view of a hair drying apparatus embodying my invention shown somewhat diagrammatically in the respect that for clearness the parts are shown in their simplest form.

Figs. 2 and 3 are cross-sectional views taken on lines 2—2 and 3—3, respectively, of Fig. 1.

Fig. 4 is a cross-sectional view taken on line 4—4 of Fig. 2, increased in size.

Fig. 5 is a cross-sectional view taken on line 5—5 of Fig. 1, increased in size.

Fig. 6 is a cross-sectional view similar to Fig. 5 but illustrating a modified form.

Fig. 7 is a view similar to Fig. 1, but in fragmentary to illustrate modified features of this invention.

Referring more particularly to the drawings, the apparatus comprises a housing 1, generally cylindrical in shape having a closed end and an open end. A motor 2 is mounted axially within the housing 1 and a blower 3 rotatably mounted on the motor shaft facing the open end of the housing 1. Mounted approximately on the same axis of the motor shaft is a rotary drum 4, in front of the blower 3. Also mounted on the same axis on the opposite end of the rotary drum 4 are rotary vanes 5. Further toward the open end is a protecting screen 6, and beyond which is a drying chamber 7 to receive a person's head through the open end of the housing 1.

Between the rotary drum 4 and the blower 3 is a passage 8 including therein a number of electric heating coils 9. Beyond the rotary drum 4 on the opposite side of the passage 8 is a continued passage 10 leading out of housing 1 to the atmosphere.

The rotary drum 4 consists of an outer cylindrical ring 11, an inner cylindrical ring 12, centrally spaced by radial members 13 dividing the peripherial space between rings 11 and 12 into sections which is filled with a dehydrating agent 14. The preferred dehydrating agent being what is commercially referred to as silica gel. The open ends of the sections are covered by screens 15 retaining the silica gel 14 in place and permitting circulation of air therethrough. The rotary drum 4 is mounted to rotate freely on a

sleeve 16 supported by a journaled bracket 17 fixed in housing 1.

The sleeve 16 (see Fig. 4) having a head portion 18 shouldering against the journaled portion of the bracket 17, two washers 19 on either side of a hub 20 of the rotary drum 4, and a nut 21 threaded on the opposite end of the sleeve 16 against a shoulder 22 to permit the hub 20 to rotate on the sleeve 16. The rotary drum 4 has spoke members 23 fastened to ring 12 supporting the hub 20 in axial relation to the ring 12. The members 23 have openings 24 to permit circulation of air therethrough. The outer ring 11 extends axially forming an annular flange 25, so provided for a wheel 26 to ride on the inside surface.

The wheel 26 is fixed to a counter shaft 27 and supported in a journaled sleeve 28. Sleeve 28 is fixed on an arm 29 pivoted on a pin 30 to a stationary support in the housing 1. A spring 31 urges the arm 29 in a direction to cause the wheel 26 to frictionally engage the flange 25 to drive it and thereby rotate the rotary drum 4.

On the opposite end of the counter shaft 27 is fixed a pulley 32 driven by the motor 2 by the connecting belt 33 and a pulley 34 rotatably fixed on the motor shaft.

A shaft 35 (see Fig. 4) journaled in the sleeve 16 has at one end a pulley 36 fixed thereon, and driven by a belt 37 which receives its rotary power from a pulley portion 38 of the wheel 26. On the other end of the shaft 35 is fixed rotary vanes 5, including outer extending arms 39 having at its extreme ends vane members 40 extending to the cylindrical walls of housing 1.

Along the inner cylindrical walls of the housing 1 are fixed stationary guides 41 for directing the circulated air. Guides 41' are sloped inwardly toward the bulge of the structure of the passage 10 to guide the circulated air under it, to compensate for its obstruction, to more evenly distribute the air along the circumference of housing 1.

A support 42 is provided for the housing 1 including a stand (not shown) of the type conventionally used with hair drying apparatus.

In operation, air (indicated by arrows) is circulated along the cylindrical wall of the housing 1 by the blower 3 into two general paths. One path, air is conveyed through the passage 8 between the heater coils 9, into the silica gel 14 of rotary drum 4, and out through the passage 10 into the atmosphere. The other path, air is circulated through the silica gel 14 of rotary drum 4, passing vane members 40 into the drying chamber 7, back inward at the center of the drying chamber 7, through the openings 24 of the rotary drum 4, back to the blower 3. Limited openings 43 may be provided at the closed end of the housing 1 to cool the motor 2.

The air circulated in the last mentioned path in passing through the silica gel 14 has a portion of its vapor removed and in so doing heat is liberated equivalent to the latent heat of evaporation of the adsorbed liquid resulting in the rise of temperature of the dried air. This dried warm air passes into the drying chamber 7 to dry the moisture on the hair.

The silica gel being of an established mesh has a definite resistance to air flow through a packed bed of granular particles. The rate of the air velocity and pressure in the drying chamber 7 is a factor of; the blower capacity, the mesh size granular silica gel, the area of the surface of the silica gel, and its depth in rotary drum 4.

These factors may be so established as to give the desired efficiency of drying hair.

In a modified form, as indicated in Fig. 7, the silica gel may be packed into the entire hollow volume of a smaller diameter rotary drum 4', dispensing with ring 12 and members 23, and extending the radial members 13 to hub 20. Thus drying the returning air drawn into the blower 3 and permitting a free passage between the outer diameter of the rotary drum 4' and the cylindrical wall of the housing 1.

In this continuous process, the silica gel must be activated for re-use and the rotary drum 4 (or 4') is rotated so the saturated portion of the silica gel comes into the air path of the first mentioned path, between the passages 8 and 10. The air passing over the coils 9 is heated to a desired temperature and passed through the silica gel to remove its moisture, and out into the atmosphere through passage 10.

The rotary drum 4 (or 4') is rotated by the wheel 26 as explained and is driven at a continuous rate to permit proper activating of the silica gel. The action of the silica gel is practically instantaneous under dynamic adsorption conditions and the reactivating process is what establishes the rate of rotation of the rotary drum, and this is a factor of: the rate of air passed therethrough, and the amount of heat of the coils 9. However the drying process of hair does not require the complete reactivating of the silica gel to complete dryness, but a portion of the moisture may be removed by the establishment of these factors to give an effective activation of the silica gel over a range satisfactory for the purpose of this invention. This would require a relative established rate of rotation of the rotary drum, an established amount of heat from coils 9, and a definite rate of air circulated from the blower 3.

A more direct method of controlling the activation of the silica gel is shown in Fig. 7. The outlet temperature of the air in the passage 10, characteristic of the material, continuous at a fairly constant temperature (150° F.) for the greater part of the activation and when practically all the water is released the temperature rises rapidly and when at 200° F. activation may be considered complete. By placing a thermostat 44 in the passage 10 the length of the activating period can be positively controlled. The thermostat 44 expanded by the increased heat (150° to 200° F.) lowers the wheel 26 on the flange 25 by the connecting link 45, and extended portion 46 of arm 29. The spring 31 being dispensed with.

To further facilitate drying of hair as earlier stated, the present use of hair dressing solution tends to cause the hair to cohere forming a barrier to the circulation of air to the underlying hair. It may be desirable to provide vane members 40 rotated at an established rate cutting the circulating air just prior to entering the drying chamber 7.

The vane members 40 may take any desired cross sectional form which may be suitable for the following action. In Fig. 5, it may take the simple form of having two side walls at a slight angle to each other. The circulating air passing along the side walls are reflected slightly outward (indicated by the arrows) causing a relative low pressure area at L and a higher pressure area on either side. The hair under the vane member 40 will be caused to move upward slightly at the low pressure area and forced down-

ward slightly at the high pressure area. The movement of the hair need not be more than several times the diameter of the hair. The vanes 5 are rotated on shaft 35 so that the vane members 40 cause varying pressure areas over the hair at such a rate as to cause the hair to vibrate, and so preventing setting of the hair dress solution.

The vane member also may have a cross-section such as 40' in Fig. 6 (indicated by the arrows), air is circulated between two walls *a*—*a* inclined inward and at *b*—*b* inclined sharper, to force the air into a high pressure stream at H and low pressure just on either side. In any case whatever the cross-section is provided it is desired to disturb the flow of circulating air over short radial areas moving over the entire circumference at such rate as to continuously vibrate the hair to prevent it from cohering.

The silica gel 14 used as indicated in rotary drum 4 has the characteristic described by the manufacturer as:

"Silica gel is a most inert, rugged material, its hardness being about Number 5 in Moh's mineralogical scale, or slightly softer than ordinary window glass. Due to these characteristics it is an extremely durable product and neither erodes nor dusts while in service or while being regenerated. The action of silica gel in adsorbing vapors is purely physical, and there is no change in the size or shape of the particles as it becomes saturated. Likewise, no corrosive or injurious compounds are given off as is usually the case when chemical absorption takes place. Even when saturated, the particles of silica gel feel and appear perfectly dry."

However this invention is not limited to the use of silica gel since activated alumina or similar adsorbing agents may be used with similar results.

Thus there has been provided a hair drying apparatus circulating air which is continuously dried, and the hair is vibrated continuously to efficiently dry hair below the surface hair.

The apparatus is fully automatic in operation and requires no attention, adjustment or replacement of parts during the hair drying operation.

It is to be understood that the forms of my invention herein described are to be taken as preferred examples of the same, and that various changes may be resorted to without departing from the spirit of my invention, or the scope of the subjoined claims.

Having thus described my invention, I claim:

1. In a hair drying apparatus, a housing including a blower, said blower circulating air in said housing, a drying chamber in said housing to receive a person's head for the purpose of drying hair by said circulating air, an adsorbing mechanism in said housing to remove moisture from the circulating air, said adsorbing mechanism including a rotary drum, an adsorbing agent in said drum, rotatable means for said drum to expose active portions of the adsorbing agent to the circulating air to have the moisture thereof removed by the said adsorbing agent, and means to reactivate the said adsorbing agent in another portion of said drum to remove the moisture thereof during the said operation of removing moisture from the circulating air.

2. In a hair drying apparatus, a housing including a blower, power means for driving said blower, said blower circulating air in said housing, a drying chamber in said housing to receive a person's head for the purpose of drying hair by said circulating air, an adsorbing mechanism in said housing to remove moisture from the circulating air, said adsorbing mechanism including a rotary drum, an adsorbing agent in said drum, rotatable power means for said drum to expose active portions of the adsorbing agent to the circulating air to have the moisture thereof removed by the said adsorbing agent, and reactivating means including a section of the said rotary drum, said blower conveying air therethrough, heating elements for heating said conveyed air, and a continued passage thereby from said rotary drum terminating outside the said housing, said rotatable power means for said drum to expose saturated portions of the adsorbing agent to the heated conveyed air to remove moisture from said adsorbing agent, to continually reactivate the adsorbing agent.

3. In a hair drying apparatus, a blower conveying air, a housing including therein: an adsorbing mechanism to remove moisture from said air, said adsorbing mechanism including a rotary drum, an adsorbent in said drum, rotatable power means for said drum to expose active portions of the adsorbent to the conveyed air, a drying chamber to receive a person's head for the purpose of drying hair, to use said moisture removed air for drying hair, vibrating mechanism to vibrate the hair to facilitate the drying operation by preventing cohering of the hair; a diverted air passage in said housing and a heater for said air therein, a portion of said adsorbing mechanism having a portion thereof adjacent one end of said passage, and a continuation of this passage to the atmosphere, to thereby reactivate the adsorbing mechanism by exposing the saturated portion of the adsorbing mechanism to said heated air and passing the saturated air into the atmosphere.

HARRY ORNER.

REFERENCES CITED

The following references are of record in the file of this patent:

UNITED STATES PATENTS

Number	Name	Date
1,570,045	Coune	Jan. 19, 1926
1,793,313	Fuchs	Feb. 17, 1931
1,814,028	Egli	July 14, 1931
2,066,847	McShea	Jan. 5, 1937
2,115,226	Kopp	Apr. 26, 1938
2,127,121	Kelly	Aug. 16, 1938
2,190,168	Armistead	Feb. 13, 1940
2,278,854	Hunsicker	Apr. 7, 1942
2,293,161	Miller	Aug. 18, 1942
2,367,601	Nicol	Jan. 16, 1945
2,444,481	Watkins	July 6, 1948

FOREIGN PATENTS

Number	Country	Date
396,845	Great Britain	Aug. 17, 1933