Aug. 7, 1956 J. K. MOORE 2,757,617

CIRCULATING PUMP

Filed Jan. 29, 1953 2 Sheets-Sheet 1

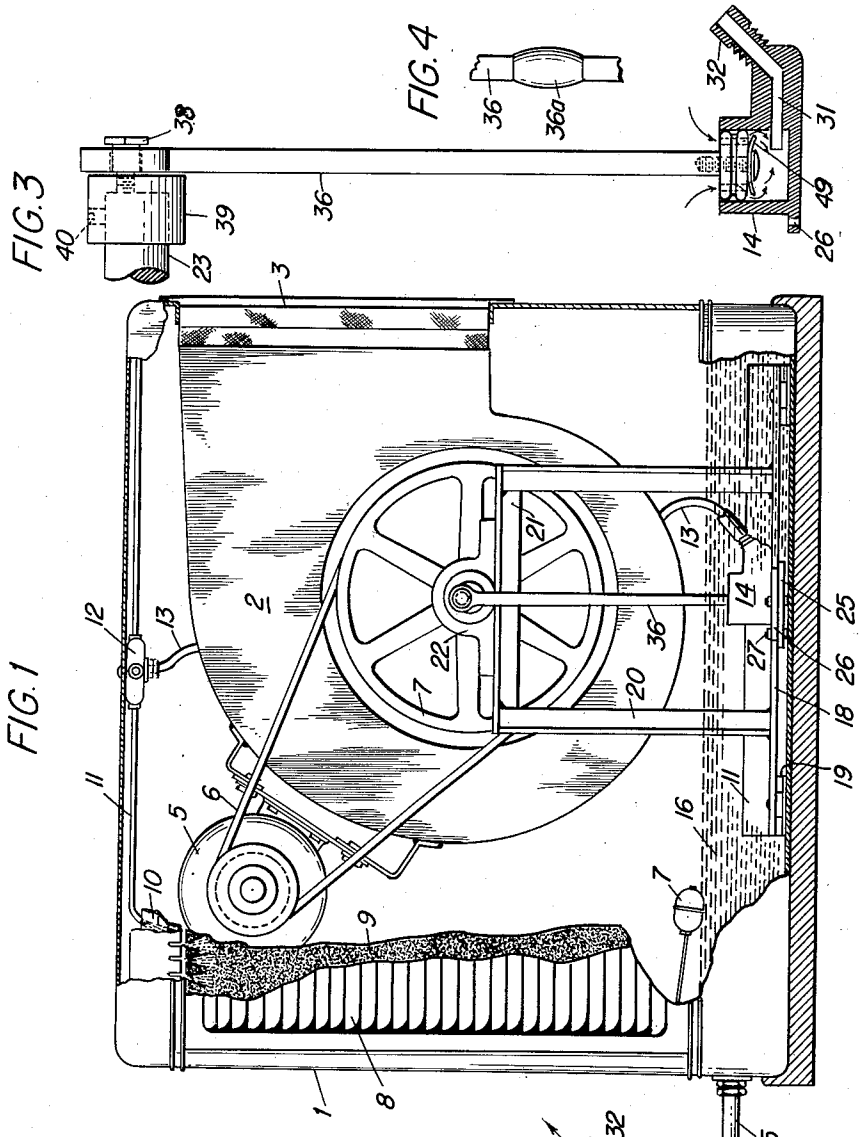

FIG. 1

FIG. 3

FIG. 4

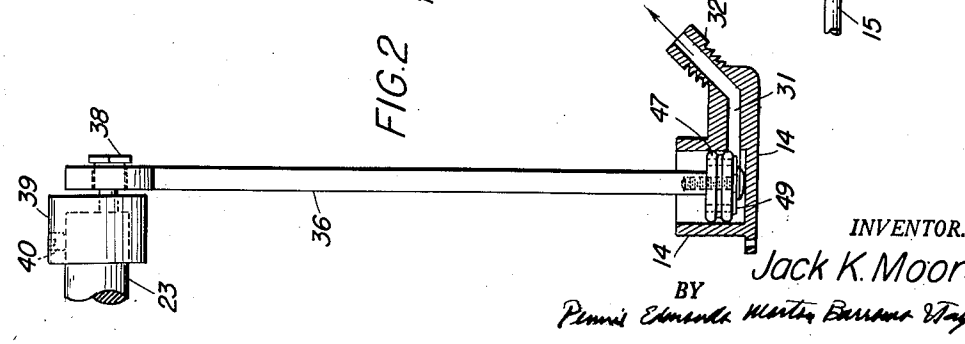

FIG. 2

INVENTOR.
Jack K. Moore
BY
Pennie Edmonds Morton Barrows & Taylor
ATTORNEYS

Aug. 7, 1956 J. K. MOORE 2,757,617

CIRCULATING PUMP

Filed Jan. 29, 1953 2 Sheets-Sheet 2

FIG. 5

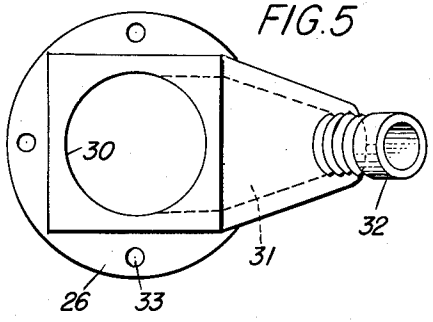

FIG. 6

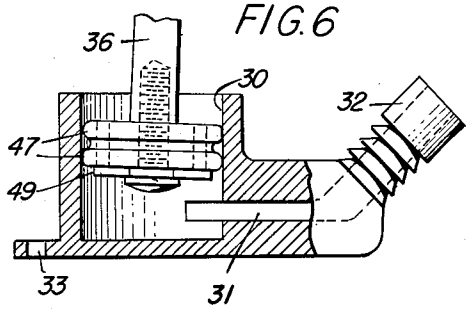

FIG. 7

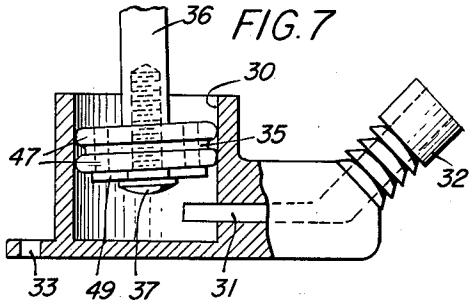

FIG. 8

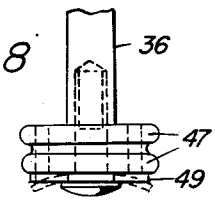

FIG. 9

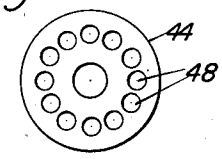

FIG. 10

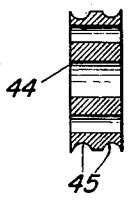

FIG. 12

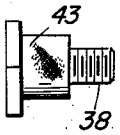

FIG. 11

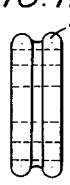

FIG. 13

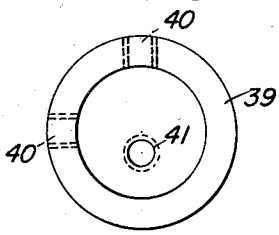

FIG. 14

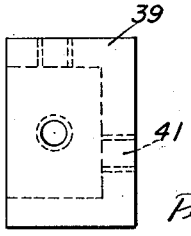

INVENTOR.
Jack K. Moore
BY
Pennie Edmonds Morton Barrows Taylor
ATTORNEYS

United States Patent Office 2,757,617 Patented Aug. 7, 1956

2,757,617

CIRCULATING PUMP

Jack K. Moore, Tucson, Ariz.

Application January 29, 1953, Serial No. 333,933

1 Claim. (Cl. 103—178)

This invention relates to improvements in circulating pumps, and more particularly to circulating pumps for circulating water in evaporative air coolers; and includes the circulating pump and evaporative air coolers in which the pump is used.

Evaporative air coolers for home and office buildings, etc., are commonly made with an outer casing containing a blower, with filter pads in its side walls which are kept wet with water and through which the air is filtered and cooled, with a water supply, and with a pump and distributing pipes for pumping the water to the filter pads.

The improved pump of the present invention has advantages for use in such evaporative air coolers to replace the pumps which are now commonly used, as will be hereinafter more fully pointed out.

The present invention also provides an improved evaporative water cooler in which the new pump is directly connected to and driven by the shaft of the blower, so that no separate motor or pulleys or belts are required for the operation of the pump.

The evaporative air coolers in which the new pump is used are provided with a water supply of regulated depth in the bottom of the compartment which contains the blower, and the new pump is located below the surface of the water in this water reservoir. The pump discharges into piping which leads the water to the filter pads to keep them wet. The pump is a piston pump with its piston rod connected to and operated by the blower shaft.

The new pump, which operates submerged in the water, has an open top cylinder, in which the piston reciprocates, and with a bottom outlet leading to the water-circulating piping. The pump is mounted below one end of the blower shaft and with the upper end of its piston rod eccentrically mounted on the end of the blower shaft, so that the pump piston reciprocates each time the blower shaft revolves.

The pump body may be of cast iron, bronze, glass, or other alkali resistant plastic. It may be lined with a thin walled bushing of stainless steel, or it may be hard chrome plated on the cylinder wall for wear and corrosion resistance.

The piston of the pump is firmly secured to the lower end of the piston rod; and the upper end of the piston rod is eccentrically connected to the end of the blower shaft. The piston has resilient piston rings which are advantageously alkali resistant as well as water resistant and may advantageously be made of neoprene. Or the whole piston may be made of plastic material such as neoprene.

Where the pump is directly connected to one end of the blower shaft with an eccentric connection and with a speed of rotation of the blower often of around 400 R. P. M. or less, the pump will make one stroke for each rotation of the blower shaft. The pumps are advantageously constructed for operation with a small stroke which is rapidly repeated.

The pump piston has holes therethrough with a flexible washer of material such as neoprene secured to the under side of the piston to close the holes of the piston during

the downstroke, and to permit downflow of water through the holes in the piston and out between the bottom of the piston and the washer during the upstroke of the piston.

The pump is designed to operate with a short stroke, e. g., around half the diameter of the piston, and with a corresponding limit of throw of the crank pin attached to the end of the blower shaft and by which the upper end of the piston rod is operated. And even though there is no joint between the piston rod and piston, the piston nevertheless operates effectively in the cylinder with the piston rings providing an effective seal between the piston and cylinder during the slight rocking back and forth during its operation.

The invention will be further described in connection with the accompanying drawings, which illustrate the construction of the pump and the arrangement and operation of the pump in an evaporative water cooler. The drawings are in part conventional and diagrammatic and with some of the parts somewhat exaggerated for purposes of illustration.

In the accompanying drawings, Fig. 1 shows an evaporative water cooler with the pump installed therein and with parts broken away;

Fig. 2 shows the pump in section and its connection with the drive shaft of the blower, with the pump piston in its lower position;

Fig. 3 is a similar view showing the pump piston in its raised position;

Fig. 4 shows a modification of the piston rod;

Fig. 5 is a plan view of the pump with the piston removed;

Fig. 6 shows the pump in section with the piston and piston rods slightly out of alignment due to the throw of the crank pin and the movement of the upper end of the piston rod in one direction;

Fig. 7 is a similar view showing the piston somewhat out of alignment when the throw of the crankpin in the upper end of the piston rod is in the other direction;

Fig. 8 is a detail view of the piston;

Fig. 9 shows a top view of one form of piston body with the piston rings omitted;

Fig. 10 is a cross-section through the piston body of Fig. 9;

Fig. 11 shows the piston with the piston rings thereon and also illustrates a piston made entirely of plastic material such as neoprene;

Fig. 12 shows the crankpin and bushing thereon for connecting the upper end of the piston rod to the cup or bushing carried by the end of the blower shaft; and

Figs. 13 and 14 show a cup to be mounted on the end of the blower shaft and to which the crankpin is connected.

The evaporative air cooler, shown somewhat conventionally and diagrammatically in Fig. 1, is of the type used for homes, plants, auditoriums and the like, and has an outer casing or cabinet **1** with a blower **2** mounted thereon, having a blower outlet **3** and operated by an electric motor **5** through a belt **6** and pulley **7** mounted on the blower shaft. The sides and back **8** of the cabinet have filter pads **9** through which the air is drawn by the blower into the cabinet, these pads being kept wet with water by water supplied through water troughs **10**, which are supplied with water through branch pipes **11**, header **12** and pipe **13**.

The new pump **14** discharges into the pipe **13** and supplies water to the water supply troughs. This pump is submerged in a body of water maintained in the bottom of the cabinet and supplied through the pipe **15** with the water level maintained by the float **7** and a float-controlled valve (not shown). Angle iron supports **18** are mounted on the bottom of the cabinet through resilient mountings **19** and the blower shaft is supported there-

from by uprights **20** and cross members **21** which carry the bearing block **22** of the blower shaft **23**.

The pump **14** is mounted on a plate **25**, of which the end is shown in Fig. 1, this plate being secured to and supported by the bottom of the angle iron **18** and having the pump **14** mounted thereon and secured thereto through the pump flange **26** and the bolts **27**.

The pump has a pump body with the cylinder **30** therein open at its upper end and with a discharge passage **31** leading to and extending through the hose or pipe connection **32**, to which the hose **13** is connected, or to which a pipe **13** is connected through a threaded tip (not shown). The pump body has a bottom flange **26** with holes **33** through which the pump is secured to the supporting plate.

The piston **35** is secured to the piston rod **36** by the bolt **37** threaded into the bottom end of the piston rod.

The crank pin **38**, by which the upper end of the piston rod is operated, is shown as having a bushing **43** mounted thereon, and the upper end of the piston rod has an opening through which the piston rod and bushing extend. The bushing **43** is advantageously made of nylon, so that lubrication is unnecessary.

The end of the blower shaft **23** is shown as having a cup **39** extending over one end of the shaft with openings **40** therein for set screws by which this cup is secured to the shaft and with an eccentrically arranged opening **41** to which the crank pin **38** is secured. The throw or stroke of the pump is determined by the distance of this eccentric opening from the center of the shaft and can be varied to give different lengths of stroke of the pump piston.

One form of piston, with the piston rings omitted, is shown in Figs. 9 and 10, the body of the piston **44** having one or more grooves **45** therein in which the yieldable piston rings **47** are mounted, and having a series of holes **48** extending through the body of the piston. Under the piston is a washer **49** which will rise and fall to close the holes in the piston during the down stroke and to open to permit water to flow between the piston and washer during the up stroke. The washer shown is not one which will rise or fall as a whole, although such a washer could be used, but is one which is made of flexible plastic material such as neoprene and is thin enough to be flexible, so that it is securely held against the piston in the middle. The action of this washer is illustrated in Fig. 8, its position during the down stroke being indicated in full lines and its position during the up stroke being indicated in dotted lines.

The piston, with the piston rings on it, is illustrated in Fig. 11, which also illustrates the piston made of neoprene as well as a piston with a metal body and neoprene rings. Neoprene rings have sufficient elasticity to permit them to be stretched to place them on the piston body, and have a desirable resilience to keep the piston effective even when it is rocked back and forth slightly as the piston rod is moved somewhat out of alignment with the center line of the cylinder.

The pumps described are intended to be relatively small in size, e. g., with a cylinder and piston of around one inch in diameter and with a piston stroke of around half of the piston diameter, and with a piston rod of e. g. around fifteen inches in length. With such a pump, the eccentric opening to which the crank pin is secured would be about one-quarter inch from the center line of the blower shaft, and the travel of the upper end of the piston rod would have a maximum distance from the center line of the pump cylinder of one-quarter of an inch each way. The piston diameter and thickness, as well as the piston stroke, can be varied. And the piston stroke for a piston of the same size can be varied by varying the distance of the crank and hole in the bushing secured to the blower shaft from the center line of the shaft.

In the operation of the pump described in an evaporative air cooler such as conventionally illustrated, the air will be drawn into the inside of the casing through the moist filter pads in its walls, by the operation of the blower, and the cooled moist air will be discharged from the blower into the room or space with which the cabinet is connected. The water will be pumped from its supply in the bottom of the cabinet to the troughs which supply the pads and keep them moist.

With a rotation of the blower shaft of e. g. around 400 R. P. M. or less, and with the pump connected to and operated by the blower shaft, the pump will have a corresponding fast stroke, and even a small pump rapidly operated will supply the needed amount of water to the filter pads.

The pump is specially designed and constructed to operate at such a rapid speed. With a relatively long connecting rod or piston rod, e. g., around 15 inches between the piston and crank pin, and with a piston stroke which is relatively small, e. g., a fraction of an inch for a one-inch piston, the piston will not be in alignment with the center line of the pump cylinder except at the top and bottom of the stroke. But with a long connect-rod or piston rod, as compared with the stroke or throw, the piston will have only a slight misalignment between the axis of the cylinder and the axis of the piston, so that provision does not have to be made for a joint or bearing where the piston rod connects to the piston.

The provision of the piston with resilient or yieldable piston rings, such as neoprene, enables the piston to have a sufficiently tight fit in the cylinder, in spite of the slight misalignment or rocking action to which it is subjected. In operation, a piston rocks back and forth slightly, and is slightly out of alignment most of the time. This rocking motion is illustrated, in a somewhat exaggerated manner, in Figs. 6 and 7. As the upper end of the piston rod moves somewhat to the right, the piston is slightly tilted so that the top seal ring on one side of the cylinder provides a somewhat tighter seal than on the other, while the bottom piston ring is doing just the opposite, so that a nearly perfect seal is effected except for a little seepage that may work past the bottom ring and travel through the narrow cup between the upper and lower rings to the opposite side and out past the top ring, or vice versa, depending upon whether the piston is moving downwardly during the pumping stroke or upwardly during the suction stroke. This leakage is small in comparison and is unimportant, and may even be considered an advantage in lubricating the two rings with water or other pump fluid so that there is no chance for a dry cylinder wall to be wiped by one ring for the other ring to travel on.

It will be noted that the pump is open at its top into the body of water in which the pump is submerged and that the pump runs entirely submerged, with the water coming into it through the holes in the piston. This method of running the completely submerged pump has the advantage of eliminating a large portion of the corrosive action of the water, particularly where the water contains alkali or other salts. This arrangement of the pump also has the advantage that the intake is spaced apart from the bottom of the water compartment, so that it does not pick up dirt that has settled, and is also spaced apart from the top of the water, so that it does not pick up floating debris. The short rapid strokes of the pump piston also appear to be effective in eliminating debris which may enter the pump, so the danger of clogging of the pump is minimized.

In some parts of the country, the water is alkaline, or contains salts and tends to be corrosive. This corrosion is minimized in the parts of the pump which operate submerged, and is also a minimum in the parts of the pump which are operated entirely in the air. But at the point where the piston rod or connecting rod leaves the water and moves up and down rapidly during the operation of the pump, the corrosive action of the water due to alkali or other chemical action may be extremely severe, since the water tends to climb the rod by capillary action and to evaporate, so that a more concentrated and corrosive

solution is formed which tends to eat away the material of the connecting rod. The point at which this attack takes place in the present pump is in the connecting rod at and somewhat above the water level. The rod can be protected by enlarging the rod at this point, as indicated at 36*a* in Fig. 4, or by applying a non-corrosive coating to the rod at this point. Thus, with an iron rod, the rod may be enlarged to provide a greater amount of material to resist corrosion. Or a corrosion-resisting material, such as a glass sleeve, can be applied to the rod at this point to protect it from corrosion.

It is one advantage of the present pump that it does not require a check valve in the pump body. The short quick strokes of the pump in relation to the bore of the cylinder make a check valve unnecessary, and its elimination eliminates an obstruction and place where dirt might otherwise gather.

In the operation of the pump, the quick downward stroke gets the water in a rapid forward motion toward the pump outlet. During the down stroke, the washer 49 seals the holes in the piston and gives a positive pumping action. During the up stroke, which occurs rapidly and immediately after the down stroke, the water is sucked in through the holes and the flexible washer is moved away from the holes to permit the water to pass into the space below the piston. With a small pump operating at a high speed, the pumping and suction actions recur in exceedingly short periods of time and maintain an effective pumping action. The rate of water circulation required in an evaporative air cooler is not large, but should be sufficient to keep the pads moist. And the new pump of the present invention is well adapted for pumping the water in such a system.

The new pump is an advantageous pump for use to replace present pumps such as belt driven or electrically driven pumps, since the new pump requires no separate operating mechanism except its direct connection to the blower shaft.

When the new pump is used to replace existing pumps with their separate driving mechanism, a simplified construction is provided because of the operation of the pump by the blower shaft.

The location of the pump entirely submerged in the water not only reduces corrosive action but also eliminates the need of separate screens for the pump inlet, since the water enters the pump freely at a location of the inlet which is away from both the bottom and surface of the body of water and away from sediment in the bottom of the water and floating debris on the top.

The new pump and its combination with the other parts of the evaporative air cooler have many advantages, among them the following: The pump has a long life due to its design and its running submerged; it is simple and cheap and easily manufactured; it is directly connected to and operated by the blower shaft, so that no separate pulleys, belts or motors are required for its operation; the pump has no metal to metal contacts in the water which might subject the pump to electrolysis, since the plastic rings of the pump piston insulate the piston from the pump cylinder; the pump has positive action, as compared with the action of centrifugal pumps, so that no stoppage due to moss or growth or foreign material is likely to clog the pump or the water line from the pump to the cooler pads; the intake to the pump is open and submerged and cleans itself, so that no screens, such as most pumps have over the intake, are necessary or even desirable, and such screens, when used, clog much more easily than the intake of the new pump; the pump needs no priming but will start immediately, even after standing for considerable periods of time; the pump needs no lubrication or other attention; the pump is simple of attachment and can readily replace other types of pumps which have given trouble in existing coolers; and whereas the life of many pumps is only one season and even less, the present pump should last many seasons during its useful life.

I claim:

A circulating pump for circulating water in evaporative air coolers and the like, said pump having a vertical cylinder open at its upper end and a continuously open discharge opening near its lower end adapted to be connected to a circulating pipe, a piston in said cylinder having a diameter appreciably less than the diameter of the pump cylinder, a pair of plastic rings sealing the piston to the cylinder walls, one of which surrounds the pump piston adjacent its working face and the other adjacent its rear face, whereby by radial compression of said rings the piston may rock into and out of axial alignment with the cylinder, said piston having a series of vertical holes therethrough and a washer secured to the bottom of the piston and adapted to close the holes during the piston down stroke and to permit flow of water through the holes during the up stroke, a piston rod extending from the rear face of the piston and adapted to have its upper end connected to the crank pin of an operating crank shaft, said piston rod being of relatively great length as compared with the throw of the crank shaft.

References Cited in the file of this patent

UNITED STATES PATENTS

555,989	Wilson	Mar. 10, 1896
826,071	Terry	July 17, 1906
1,091,554	Wiechert	Mar. 31, 1914
1,133,270	Dale	Mar. 30, 1915
2,023,466	Crowley	Dec. 10, 1935
2,148,161	Isles	Feb. 21, 1939
2,189,391	Bowdish	Feb. 6, 1940
2,237,497	Munford	Apr. 8, 1941
2,435,527	Arpin	Feb. 3, 1948
2,435,798	Rice et al.	Feb. 10, 1948
2,456,066	Kempton	Dec. 14, 1948
2,655,349	Beavin	Oct. 13, 1953