July 17, 1962 R. L. DETWILER 3,044,400

SABOT

Filed Sept. 21, 1953 2 Sheets-Sheet 1

FIG. 1.

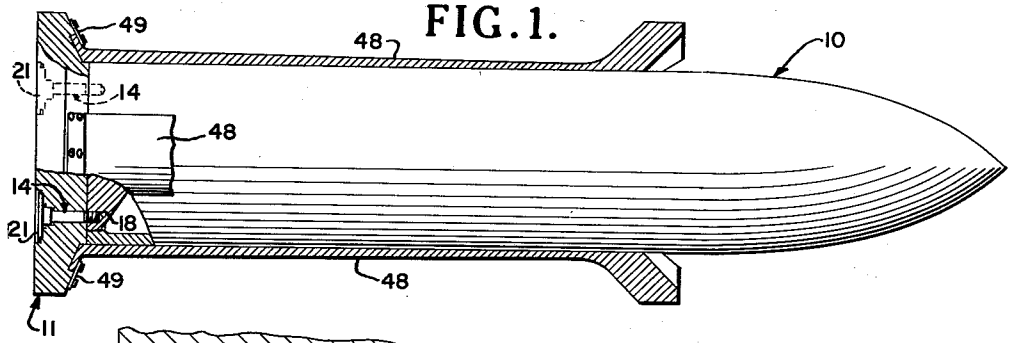

FIG. 2.

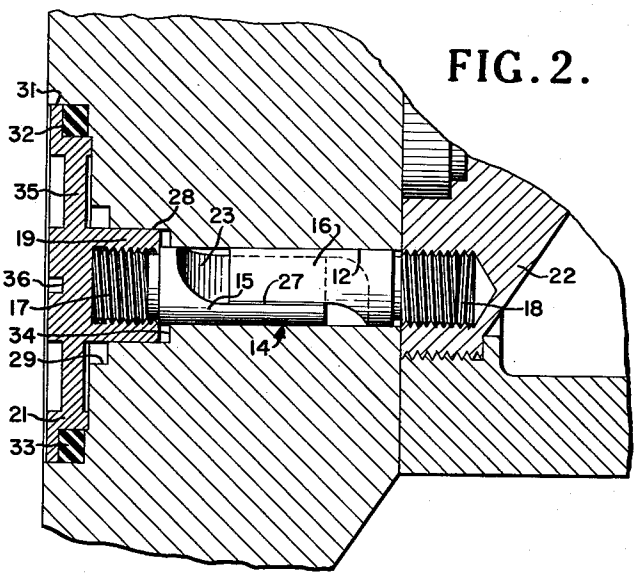

FIG. 6.

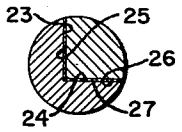

FIG. 5.

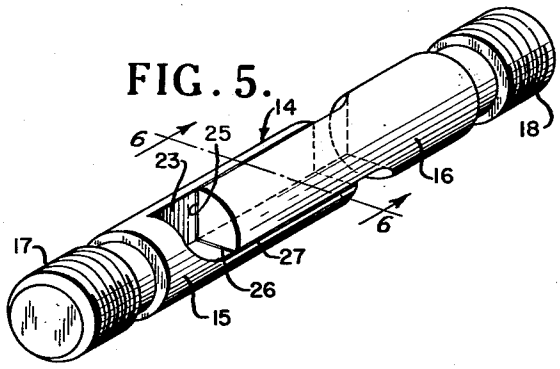

INVENTOR
R. L. DETWILER

BY

R. M. Hicks
ATTORNEYS

July 17, 1962 R. L. DETWILER 3,044,400

SABOT

Filed Sept. 21, 1953 2 Sheets-Sheet 2

FIG. 3.

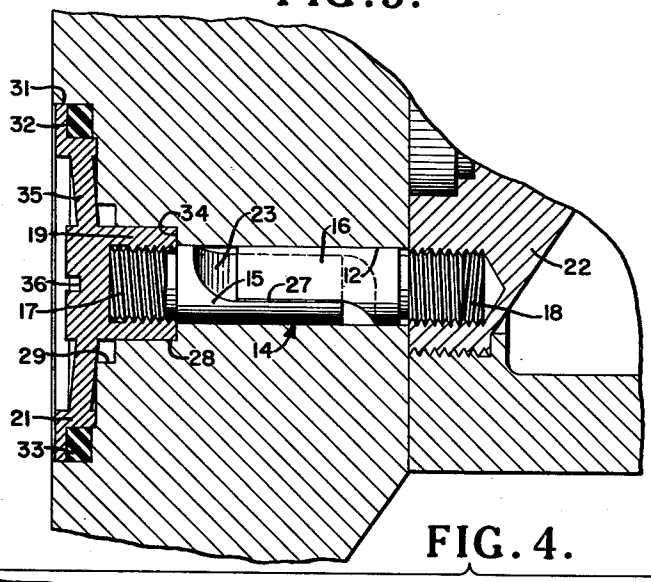

FIG. 4.

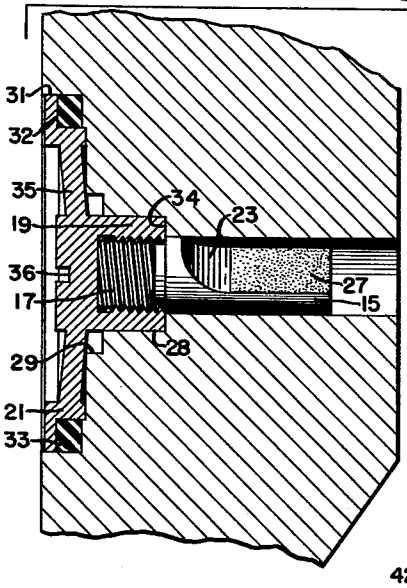

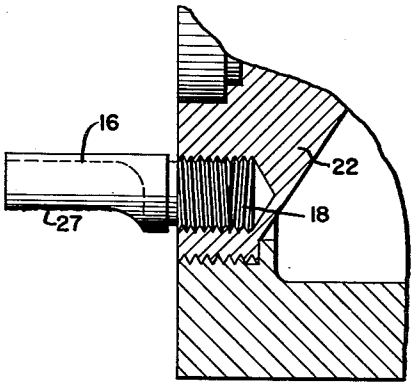

FIG. 8.

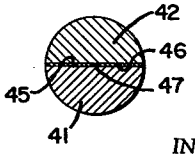

FIG. 7.

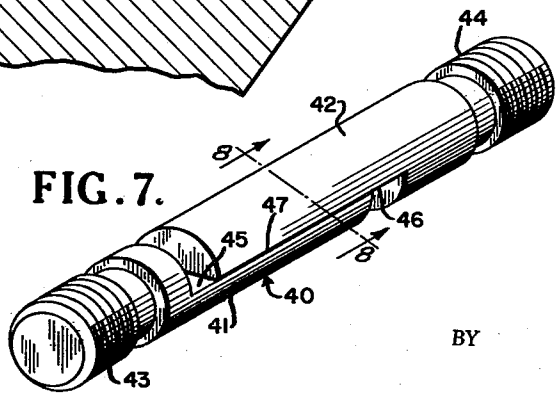

INVENTOR
R. L. DETWILER

BY

R. M. Hicks
ATTORNEYS

United States Patent Office 3,044,400 Patented July 17, 1962

3,044,400
SABOT

Robert L. Detwiler, Riverdale, Md., assignor to the United States of America as represented by the Secretary of the Navy

Filed Sept. 21, 1953, Ser. No. 381,525
5 Claims. (Cl. 102—93)
(Granted under Title 35, U.S. Code (1952), sec. 266)

The invention described herein may be manufactured and used by or for the Government of the United States of America for governmental purposes without the payment of any royalties thereon or therefor.

The present invention relates to apparatus for securing a sabot to a gun fired projectile or missile and releasing the sabot therefrom upon firing of the propelling charge. More particularly, the invention relates to a separable bolt or stud device for securing a sabot on a missile which releases the sabot from the missile by gas pressure developed when the propelling charge is fired in the gun, the sabot and missile being driven out of the gun thereafter and the sabot separating and falling away from the missile after leaving the muzzle of the gun.

An object of the present invention is to provide a new and improved sabot release device for a gun-propelled missile wherein the sabot is released from the missile by pressure of the propelling charge within the gun.

Another object is to provide a new and improved sabot release device for a gun-propelled missile which is capable of withstanding ramming and general handling forces without releasing and which is readily released by the explosive force of the propelling charge.

Still another object is to provide a new and improved sabot release device which is simple, inexpensive to manufacture, and well adapted for the purpose intended.

A further object is to provide a separable bolt for retaining a sabot on a missile which is separable to release the sabot by gas pressure developed by the propelling charge for the missile.

Other objects and many of the attendant advantages of this invention will be readily appreciated as the same becomes better understood by reference to the following detailed description when considered in connection with the accompanying drawings wherein:

FIG. 1 is a side elevation having parts broken away of a missile or projectile and showing a sabot attached thereto by the device of the present invention;

FIG. 2 is an enlarged detail sectional view showing the device of the present invention mounted in locking position;

FIG. 3 is a sectional view similar to FIG. 2 and showing the diaphragm of the device forced inwardly by the pressure of the propelling charge;

FIG. 4 is a view similar to FIG. 2 and showing the sabot separated from the missile after leaving the muzzle of the gun;

FIG. 5 is a detail perspective view of a preferred form of the separable bolt;

FIG. 6 is a sectional view taken along the line 6—6 of FIG. 5;

FIG. 7 is a detail perspective view of a slightly modified form of the separable bolt; and

FIG. 8 is a sectional view taken along the line 8—8 of FIG. 7.

Referring more particularly to the drawings wherein like numerals indicate like parts throughout the several views, 10 indicates a gun-propelled missile or projectile and 11 indicates the gas retaining disc of a sabot secured to the trailing end thereof. Sabot 11 is provided with a plurality of concentric bores 12 in which are fitted the separable bolts indicated generally at 14.

Bolts 14 comprise a pair of separable portions 15 and 16, portion 15 having a threaded end 17 and portion 16 having a threaded end 18.

Threaded end 17 of portion 15 is threaded into hub 19 of a diaphragm 21, while threaded end 18 is threaded into an adapter 22 which closes the end of missile 10. Portion 15 of bolt 14 is cut away along a part of the length thereof to provide flat engaging surfaces 23 and 24, while portion 16 of bolt 14 is cut away along a part of the length thereof to provide matching flat engaging surfaces 25 and 26. Surfaces 23 and 25, and surfaces 24 and 26 are joined together by a bonding medium such for example, as by hard solder 27. In this manner portions 15 and 16 of bolt 14 are joined together with sufficient strength to withstand ordinary handling and ramming forces encountered in the shipping and loading of sabot-mounted missiles. Each bore 12 is enlarged at 28 to receive hub 19 of diaphragm 21 and is further increased in diameter at 29 for a purpose to be hereinafter more fully described. Each bore 12 is still further increased in diameter at 31 to receive the full diameter of diaphragm 21 which is provided at the periphery thereof with a step cut 32 to receive an O ring gasket 33 to prevent the leakage of propelling charge gases past the diaphragm.

As shown particularly in FIG. 2, a clearance is provided between the end of hub 19 and shoulder 34 formed by enlargement 28, thus to permit hub 19 to move inwardly.

Diaphragm 21 is provided with a thinned web section 35 between the peripheral portion thereof and the hub 19. Formed in the outer portion of hub 19 is a screw driver slot 36 whereby an assembled diaphragm 21 and bolt 14 may be conveniently installed in each bore 12 and screwed into adapter 22 thus to secure sabot 11 to the end of missile 10.

In operation, the missile 10 having disc 11 of the sabot secured thereto by separable bolts 14, is inserted in the breech of a gun (not shown), a propelling charge (not shown) being rammed in behind disc 11. When the propelling charge is fired, each diaphragm 21 is deformed by pressure developed by the expanding gases of the charge and hub 19 is moved inwardly against shoulder 34. Hub 19 moves portion 15 of bolt 14 inwardly with respect to portion 16 of bolt 14 thus severing bonding connection 27 therebetween. It is, of course, understood that the inertia of missile 10 is too great to be moved merely by the movement of portion 15. Missile 10 is driven through the bore of the gun by disc 11 which in turn is driven by the gases generated by the propelling charge.

Where missile 10 and the sabot leave the muzzle of the gun, the portions 15 and 16 of each bolt 14 being separated, the arms 48 of the sabot are splayed outwardly at weakened joints 49 and the sabot is separated from the missile by air pressure developed against arms 48 and the outer diameter of the disc 11, the sabot component falling away from the missile, thus leaving only portion 16 of bolts 14 secured to the missile.

If desired the bolt 14 may be formed as shown in the modification of FIGS. 7 and 8, the bolt being indicated generally at 40 and comprising portions 41 and 42. Portion 41 is provided with a threaded end 43 while portion 42 is provided with a threaded end 44. Each of the portions 41 and 42 is cut away across the center thereof as at 45 and 46, respectively, the surfaces being joined by a bonding medium such for example, as the thin layer of hard solder 47.

It is, of course, understood that the matching surfaces of the two portions of bolts 14 and 40 may be formed in any desired shape thereby to provide a greater or lesser area to the adjacent surfaces for a given diameter and length of bolt. It is also to be understood that various other suitable metals such as brass or other bonding materials may be employed to provide a variety of shear

strengths in place of hard solder to secure the two portions of the bolts together depending on the strength of joint desired.

Obviously many modifications and variations of the present invention are possible in the light of the above teachings. It is therefore to be understood that within the scope of the appended claims the invention may be practiced otherwise than as specifically described.

What is claimed as new and desired to be secured by Letters Patent of the United States is:

1. Apparatus for releasably securing a sabot to a gun-propelled missile comprising, in combination, a plurality of separable bolts extending through and securing the sabot to the missile, said bolts each including a pair of separable portions, each of said portions having at least one flat surface running along the axis thereof, said flat surface of each of said portions being in face adjacency with the flat surface of the other of said portions of each bolt, a metallic bonding medium interposed between said adjacent flat surfaces and fuzed thereto for securing said portions together, diaphragm means sealed to said sabot and threaded on one end portion of each bolt for applying tension thereto sufficient to secure the sabot to the missile, said diaphragm means being deformable by gas pressure when the gun is fired to move one of said portions with respect to the other of said portions thereby to break the metallic bond therebetween and to disconnect the sabot from the missile.

2. Apparatus for releasably securing a sabot to a gun-propelled missile comprising, in combination, a bolt passing through the sabot, a pair of sections for said bolt, each of said sections having a flat surface running along the axis thereof, said surfaces being in mutual face adjacency, a metallic bonding medium interposed between said surfaces and fuzed thereto for securing said sections together, means for firmly securing one of said sections to said missile, pressure responsive means secured to the other of said sections for applying tension to the bolt sufficient to releasably clamp the sabot to the missile, said pressure responsive means being deformable by gas pressure to move the other of said sections to break the bond between said sections by gas pressure generated as the gun is fired.

3. Apparatus for releasing an expendable device from a missile which is fired from a gun comprising, in combination, a bolt having a first member fixed to said missile and a flat surface therealong coincidental with the axis thereof, a second member extending through said expendable device and initially retaining the device to the missile, means including a metallic bonded joint disposed along the length of the bolt for securing the first and second members together at the respective flat surfaces thereof, and diaphragm means secured to said second member and having an annular surface near the periphery thereof engaging said expendable device for applying tension to said bolt sufficient to secure said device to the missile, said diaphragm means being deformable by gas pressure generated by firing said gun to break said joint thereby to release the expendable device from the missile.

4. Apparatus in accordance with claim 3 in which means are provided for sealing said diaphragm means to said second member.

5. Apparatus in accordance with claim 4 in which means are provided on said second member for arresting further movement of said diaphragm means when the diaphragm means has been deformed sufficiently to break said joint.

References Cited in the file of this patent

UNITED STATES PATENTS

Re. 1,788	Smith	Oct. 14, 1864
388,413	Hawley	Aug. 28, 1888
2,306,140	Reed	Dec. 22, 1942

FOREIGN PATENTS

13,575	Great Britain	Oct. 14, 1885
496,991	France	Nov. 21, 1919