Nov. 9, 1965 J. R. M. ALGER ET AL 3,216,227

CLOTHES WASHING MACHINES

Filed Oct. 8, 1963 2 Sheets-Sheet 1

FIG. 1

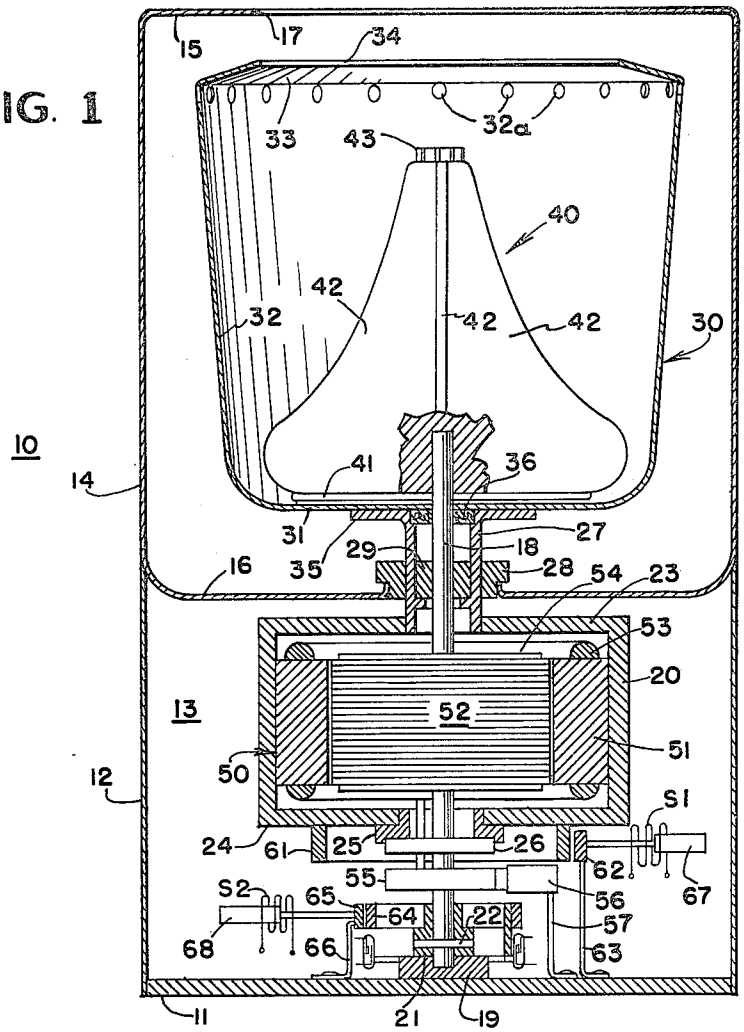


FIG. 2

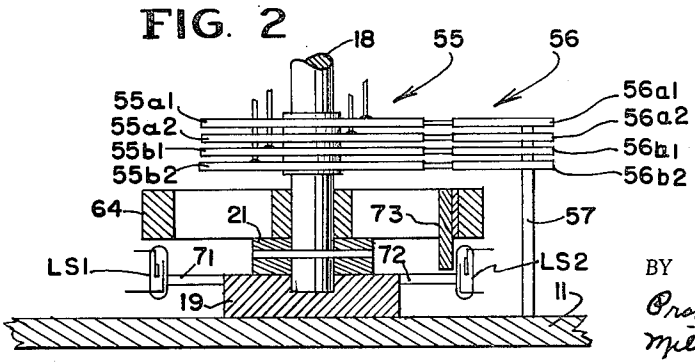


INVENTOR.
JOHN R. M. ALGER
CARL V. HAYS
BY Crosby, Baird, Clayton, Miller & Vogel, ATTYS.

CLOTHES WASHING MACHINES

Filed Oct. 8, 1963 2 Sheets-Sheet 2

FIG. 3

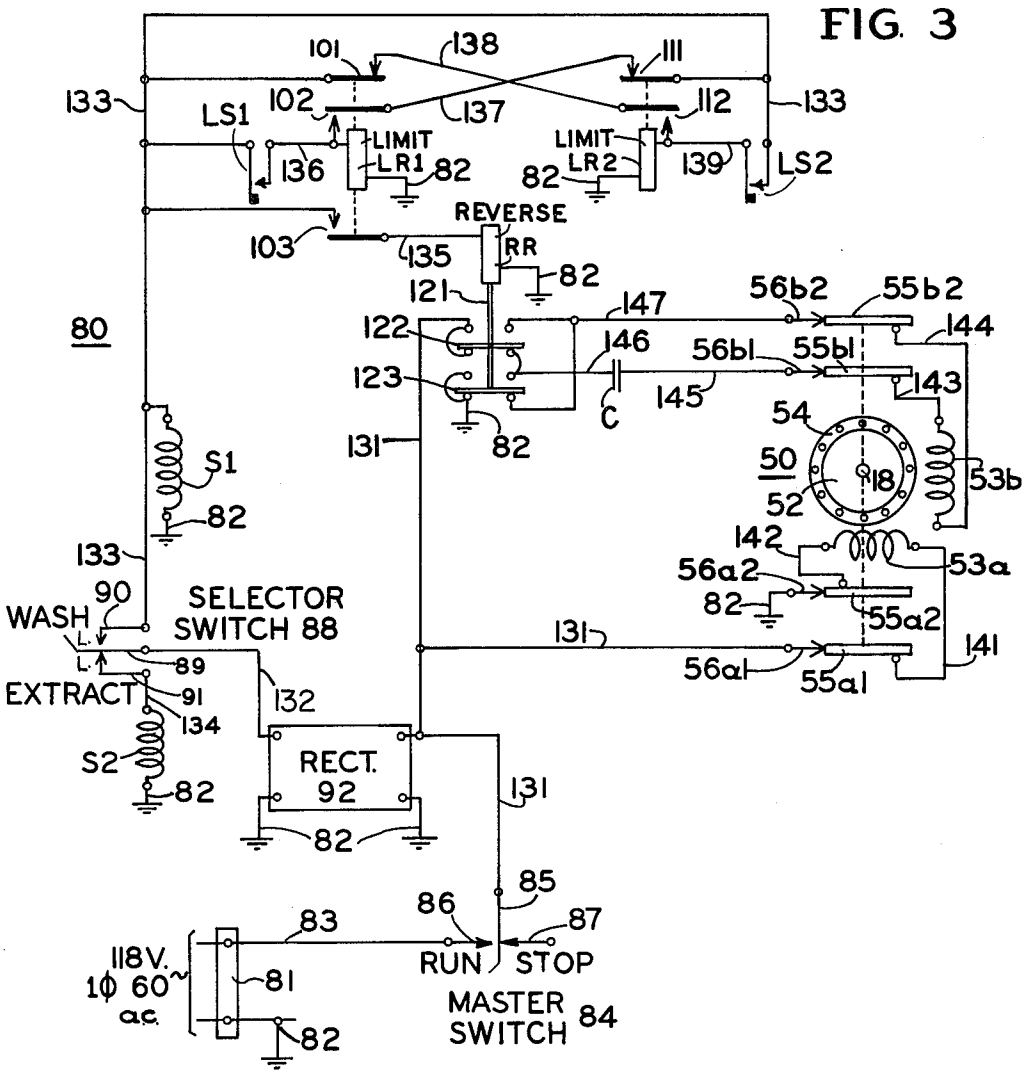


INVENTORS,
JOHN R. M. ALGER
BY CARL V. HAYS
Prangley, Baird Clayton,
Miller & Vogel,
ATTYS.

United States Patent Office

3,216,227

Patented Nov. 9, 1965

1

3,216,227

# CLOTHES WASHING MACHINES

John R. M. Alger, Oak Park, Ill., and Carl V. Hays, Milwaukee, Wis., assignors to General Electric Company, a corporation of New York

Filed Oct. 8, 1963, Ser. No. 314,753
8 Claims. (Cl. 68—23)

The present invention relates to clothes washing machines, and more particularly to such machines of small size or capacity that are especially designed for use in a bathroom, or the like.

It is a general object of the invention to provide a clothes washing machine of the type noted that comprises a simple drive mechanism that is devoid of mechanical gearing or other complicated transmission devices.

Another object of the invention is to provide a clothes washing machine that is capable of selective clothes-washing and water-extracting operations, wherein the entire drive mechanism therefor consists fundamentally of a reversible electric motor and a control circuit for the motor, and wherein the desired operations of the machine may be obtained by selectively governing the control circuit for the motor.

A further object of the invention is to provide a clothes washing machine of the character described, wherein the machine includes a support, an upstanding shaft mounted for rotation upon the support, a frame mounted for rotation upon the shaft, an upstanding tub fixedly secured to the upper end of the frame and rotatable therewith, an upstanding agitator arranged in the tub and fixedly secured to the upper end of the shaft and rotatable therewith, wherein oscillation of the agitator effects washing of the clothes contained in the tub and rotation of the tub effects centrifugal water extracting from the clothes contained therein, a first brake carried by the support and operatively associated with the frame, the first brake having set and release positions so that the first brake in its set positions prevents rotation of the frame with respect to the support, a second brake carried by the support and operatively associated with the shaft, the second brake having set and release positions so that the second brake in its set position prevents rotation of the shaft with respect to the support, an electric motor including cooperating first and second field members, the first field member being fixedly secured to the frame and rotatable therewith, the second field member being fixedly secured to the shaft and rotatable therewith, cooperating first and second windings respectively carried by the first and second field members, a source of electric power, first circuit control facility for operating the first brake into its set position and for energizing a predetermined one of the windings alternately with first and second polarities from the source so that the agitator is oscillated with the tub in a stationary position to carry out a clothes-washing operation upon the clothes contained in the tub, and second circuit control facility for operating the second brake into its set position and for energizing the one winding continuously with a given polarity from the source so that the tub is rotated continuously with the agitator in a stationary position to carry out a water-extracting operation upon the clothes contained in the tub.

A further object of the invention is to provide a clothes washing machine of the character described, wherein the first and second circuit control facilities are selectively governed by the conjoint operations of a master switch and a selector switch, each of the manually operable type.

A still further object of the invention is to provide a clothes washing machine of the type described, wherein the control circuit facility for energizing the one winding alternately with first and second polarities from the source

2

essentially comprises a reversing switch, cycle mechanism for selectively actuating the reversing switch, and limit mechanism for selectively governing the cycle mechanism.

Further features of the invention pertain to the particular arrangement of the elements of the clothes washing machine and of the control circuit therefore, whereby the above-outlined and additional operating features thereof are attained.

The invention, both as to its organization and method of operation, together with further objects and advantages thereof, will best be understood by reference to the following specification, taken in connection with the accompanying drawings, in which:

FIGURE 1 is a vertical sectional view of a clothes washing machine embodying the present invention;

FIG. 2 is an enlarged fragmentary vertical sectional view of the lower portion of the clothes washing machine, as shown in FIG. 1; and

FIG. 3 is a diagrammatic illustration of the electric circuit network for controlling the clothes washing machine.

Referring now to FIG. 1 of the drawings, the clothes washing machine **10** there illustrated, and embodying the features of the present invention, comprises a substantially circular supporting base **11** carrying an upstanding substantially cylindrical casing **12** defining therein a machinery compartment **13** and supporting upon the top thereof an upstanding substantially cylindrical drain tub **14**. The drain tub **14** includes top and bottom walls **15** and **16**, the top wall **15** having a substantially centrally disposed circular top opening **17** therein. An upstanding substantially centrally disposed shaft **18** is arranged in the machinery compartment **13** and supported at the lower end thereof by a bearing member **19** carried by the base **11**, whereby the shaft **18** is mounted for rotation about its upstanding longitudinally extending axis. Also, an upstanding substantially cylindrical frame **20** is arranged in the machinery compartment **13** in surrounding relation with the shaft **18** and mounted thereupon for rotation with respect thereto. More particularly, the lower end of the shaft **18** carries a bearing collar **21** that is secured thereto by an associated pin **22** and that cooperates with the bearing member **19** in supporting the shaft **18** and the frame **20** upon the base **11**. The frame **20** comprises top and bottom walls **23** and **24**; and annular bearing collar **25** is rigidly secured in place in a substantially centrally disposed opening provided in the bottom wall **24**; which bearing collar **25** is directly supported upon a substantially disk-like bearing member **26** rigidly secured to the lower portion of the shaft **18**. An upstanding tube **27** is arranged in surronuding relation with the upper portion of the shaft **18** and is rigidly secured in place in a substantially centrally disposed opening provided in the top wall **23**. A substantially annular bearing collar **28** is rigidly secured in place and in watertight relation with a substantially centrally disposed opening provided in the bottom wall **16** of the drain tub **14**. The bearing collar **28** receives and supports the tube **27** for rotation therein; and a bearing sleeve **29** is arranged within the tube **27** and receives and supports the shaft **18** for rotation therein; whereby both the upper portion of the shaft **18** and the tube **27** project through the centrally disposed opening provided in the bottom wall **16** of the drain tub **14** from the top of the machinery compartment **13** into the bottom of the drain tub **14**.

An upstanding substantially cup-shaped wash tub **30** is arranged substantially centrally within the drain tub **14**, which wash tub **30** comprises a substantially horizontal bottom wall **31**, an upwardly flared tubular side wall **32**, and an upwardly and inwardly directed substantially annular guard rim **33** having a substantially centrally disposed circular top opening **34** therein; which

top opening 34 into the wash tub 30 is disposed in substantial registry with the top opening 17 into the drain tub 14. The central portion of the bottom wall 31 of the wash tub 30 is rigidly secured to an annular flange 35 carried by the top end of the tube 27; and the upper end of the shaft 18 projects upwardly through a substantially centrally disposed opening provided in the bottom wall 31 and into the bottom of the wash tub 30. Also, a packing gland 36 is arranged in the top end of the tube 27 within the flange 35 and disposed in sealing relation with the upper end of the shaft 18 closely surrounded thereby, so as to prevent the escape of wash water from the wash tub 30 along the upper end of the shaft 18 projecting through the centrally disposed opening provided in the bottom wall 31 of the wash tub 30. In a similar manner, the bearing collar 28 closely surrounds the tube 27, so as to prevent the escape of wash water from the drain tub 14 along the tube 27 and into the machinery compartment 13.

An upstanding agitator 40 is arranged substantially centrally in the lower portion of the wash tub 30 and receiving the upper end of the shaft 18 and securely fastened thereto for rotation therewith. The agitator 40 is of conventional construction including a substantially disk-shaped base 41 and a plurality of upstanding blades 42 therefrom, the blades being arranged in angularly spaced-apart relation and extending upwardly and inwardly toward the top of the agitator 40. The extreme top of the agitator 40 carries a smooth knob 43 positioned somewhat below the top of the side wall 32 of the wash tub 30. Also, the usual out-flow holes 32*a* are provided in the top of the side wall 32 of the wash tub 30 and disposed in an annular array at the junction of the extreme top of the side wall 32 and the guard rim 33.

Further, the machine 10 comprises an electric drive motor 50 that is preferably of the induction type; the motor 50 being arranged in the machinery compartment 13 and comprising a stator 51 mounted within the frame 20 and securely fastened thereto for rotation therewith, and a rotor 52 mounted on the intermediate portion of the shaft 18 and securely fastened thereto for rotation therewith. The stator 50 comprises a first magnetic field member carrying a main winding 53; and the rotor 52 comprises a second magnetic field member carrying an induction winding 54, the stator 51 being of substantially annular form and the rotor 52 being of substantially cylindrical form, and the stator 51 closely surrounding the rotor 52 with a substantially cylindrical magnetic field gap therebetween.

Referring now to FIG. 3, the induction motor 50 is of the split-phase type; whereby the main winding 53 comprises two sections 53*a* and 53*b* arranged in quadrature relation, and the induction winding 54 is of the squirrel-cage type. In other words, the two sections 53*a* and 53*b* of the main winding 53 are arranged in substantial electrically dephase relation with respect to each other and are commonly inductively coupled to the squirrel-cage winding 54. Since the winding sections 53*a* and 53*b* of the main winding 53 are mounted for rotation with the frame 20 upon the shaft 18 and with respect to the base 11, electrical connections are made thereto through slip-ring structure 55 and cooperating brush structure 56, as indicated in FIG. 1. The slip-ring structure 55 is carried by the shaft 18 and rotatable therewith, while the brush structure 56 is mounted upon an insulating support 57 that is carried by the base 11.

This arrangement is illustrated in detail in FIGS. 2 and 3, whereby the slip-ring structure 55 comprises four individual slip-rings 55*a*1, 55*a*2, 55*b*1 and 55*b*2, and the brush structure 56 comprises four individual brushes 56*a*1, 56*a*2, 56*b*1 and 56*b*2. The rings 55*a*1 and 55*a*2 respectively terminate the opposite terminals of the winding section 53*a*, and the rings 55*b*1 and 55*b*2 respectively terminate the opposite terminals of the winding section 53*b*.



Again referring to FIG. 1, the bottom wall 24 of the frame 20 carries a substantially annular brake drum 61 disposed substantially concentric with the shaft 18 and provided with a cooperating brake shoe 62 supported by a spring 63 carried by the base 11, the spring 63 biasing the shoe 62 into a release position with respect to the drum 61. The lower portion of the shaft 18 carries a substantially annular brake drum 64 disposed substantially concentric therewith and provided with a cooperating brake shoe 65 supported by a spring 66 carried by the base 11, the spring 66 biasing the shoe 65 into a release position with respect to the drum 64. The shoe 62 may be operated into a set position with respect to the drum 61 by an armature 67 provided with a cooperating solenoid S1; and the shoe 65 may be operated into a set position with respect to the drum 64 by an armature 68 provided with a cooperating solenoid S2.

Further the machine 10 comprises two limit switches LS1 and LS2 respectively carried by two substantially diametrically positioned arms 71 and 72 carried by the bearing member 19, as best shown in FIG. 2; which limit switches LS1 and LS2 comprise a portion of limit mechanism, also including a permanent magnet 73 carried by the brake drum 64 and rotatable therewith. The permanent magnet 73 depends from the brake drum 64 and alternately cooperates with the limit switches LS1 and LS2, as the shaft 18 is oscillated through an angle of approximately 180°, as explained more fully hereinafter. More particularly, as the shaft 18 is thus oscillated, the permanent magnet 73 is moved into close proximity first with one of the limit switches and then with the other of the limit switches. Each of the limit switches LS1 and LS2 essentially comprises a glass envelope into which a pair of switch springs are sealed, the switch springs being normally biased into disengagement with each other. One of the switch springs carries a magnetic armature which is attracted toward the depending pole of the permanent magnet 73, when the same is rotated into close proximity thereto; whereby the armature is moved toward the pole of the approaching permanent magnet 73 to flex the supporting spring so as to move the pair of contacts into engagement with each other for an electrical control purpose explained subsequently. When the permanent magnet 73 moves away from the limit switch LS1 or LS2, the armature thereof is released so that the supporting spring is returned into its normal position disengaging the cooperating springs, due to the resiliency of the supporting springs, so as to disengage the pair of switch springs.

Referring now to FIG. 3, the washing machine 10 comprises the electric control circuit 80 there illustrated, which further comprises a terminal board 81 to which there is connected an electric power source of 118 volts, single-phase, 60 cycles, A.-C., and including a grounded conductor 82 and an ungrounded conductor 83. The control circuit 80 also comprises a manually operable master switch 84 having a "stop" position and a "run" position, a manually operable selector switch 88 having a "wash" position and an "extract" position, a rectifier 92 of any suitable type, a pair of limit relays LR1 and LR2, a reverse relay RR, and a capacitor C that is preferably of the so-called "oil-filled" type. Further, the control circuit 80 comprises the two limit switches LS1 and LS2, and the electric drive motor 50, as previously described.

The master switch 84 includes a movable switch spring 85 and two stationary switch springs 86 and 87; and the selector switch 88 includes a movable switch spring 89 and two stationary switch springs 90 and 91. The limit relay LR1 includes a winding and an armature controlling the contact sets 101, 102 and 103; the limit relay LR2 includes a winding and an armature controlling the contact sets 111 and 112; and the reverse relay RR includes a winding and an armature controlling an insulating contact rod 121. The rod 121 controls two contact bridging

members **122** and **123** each governing front and back pairs of contacts.

In the control circuit **80**, the conductor **83** is connected to the switch spring **86** of the master switch **84**, and the switch spring **85** of the master switch **84** is connected to a conductor **131**. The rectifier **92** comprises a pair of input terminals respectively terminating the conductors **82** and **131**, and a pair of output terminals respectively terminating the conductor **82** and a conductor **132**. The switch spring **89** of the selector switch **88** terminates the conductor **132**, and the switch springs **90** and **91** of the selector switch **88** respectively terminate two conductors **133** and **134**. The solenoid S1 is bridged across the conductors **82** and **133**; and the solenoid S2 is bridged across the conductors **82** and **134**. The terminals of the limit switch LS1 respectively terminate the conductor **133** and a conductor **136**; the terminals of the limit switch LS2 respectively terminate the conductor **133** and a conductor **139**; the winding of the limit relay LR1 is bridged across the conductors **82** and **136**; and the winding of the limit relay LR2 is bridged across the conductors **82** and **139**. The contacts of the set **103** respectively terminate the conductor **133** and a conductor **135**; and the winding of the reverse relay RR is bridged across the conductors **82** and **135**. The contacts of the set **102** respectively terminate the conductor **136** and a conductor **137**; the contacts of the set **101** respectively terminate the conductor **133** and a conductor **138**; the contacts of the set **112** respectively terminate the conductors **138** and **139**; and the contacts of the set **111** respectively terminate the conductors **133** and **137**. The back contacts controlled by the bridging member **122** respectively terminate the conductor **131** and a conductor **146**; and the front contacts controlled by the bridging member **122** respectively terminate the conductor **131** and a conductor **147**. The back contacts controlled by the bridging member **123** respectively terminate the conductors **82** and **147**; and the front contacts controlled by the bridging member **123** respectively terminate the conductors **82** and **146**. The terminals of the capacitor C are bridged across the conductor **146** and a conductor **145**.

The brushes **56*a*1**, **56*a*2**, **56*b*1** and **56*b*2** respectively terminate the conductors **131**, **82**, **145** and **147**; the slip rings **55*a*1**, **55*a*2**, **55*b*1** and **55*b*2** respectively terminate four conductors **141**, **142**, **143** and **144**; the winding section **53*a*** is bridged across the conductors **141** and **142**; and the winding section **53*b*** is bridged across the conductors **143** and **144**.

Considering now the general mode of operation of the clothes washing machine **10** and referring to FIG. 1, it will be understood that the water and the clothes to be washed are placed into the wash tub **30** through the aligned top openings **17** and **34** in any suitable manner, not shown. Thereafter, in order to carry out a washing operation upon the clothes contained in the wash tub **30**, the brake shoe **62** is operated into its set position with respect to the brake drum **61**, so as to prevent movement of the frame **20** with respect to the base **11**, in order to maintain the wash tub **30** in a stationary position. The main winding **53** of the electric motor **50** is then energized alternately with opposite polarities from the source of electric power, whereby the rotor **52** is oscillated within the stator **51** causing corresponding and direct oscillation of the agitator **40** within the wash tub **30**, so that the clothes contained in the wash tub **30** are subjected to a clothes-washing action in a conventional manner.

Thereafter, the clothes are subjected to a water-extracting action; and in order to accomplish this, the brake shoe **62** is returned into its release position with respect to the brake drum **61** and the brake shoe **65** is operated into its set position with respect to the brake drum **64**, so as to prevent movement of the shaft **18** with respect to the base **11**, in order to maintain the agitator **40** in a stationary position. The main winding **53** of the electric motor **50** is then energized continuously with a given polarity from the source of electric power, whereby the stator **51** is rotated continuously about the rotor **52** upon the shaft **18** causing corresponding rotation or spinning of the frame **20** and the carried wash tub **30**, so that the water and the clothes contained in the wash tub **30** are subject to centrifugal forces. Specifically, the water climbs the upwardly and outwardly directed side wall **32** of the wash tub **30** and is flung through the holes **32*a*** formed therein at the bottom of the guard rim **33**. Thereafter, the clothes are pressed against the side wall **32** of the spinning wash tub **30** to express the wash water therefrom, all in a conventional manner, the guard rim **33** preventing throwing of the clothes over the top of the wash tub **30** with the drain tub **14**. Of course, the wash water flung from the wash tub **30** is caught in the drain tub **14** and may be pumped, or otherwise discharged therefrom, by conventional facility, not shown. After completion of the water-extracting action upon the clothes contained in the wash tub **30**, the main winding **53** of the electric motor **50** is deenergized and the brake shoe **65** is returned into its release position with respect to the brake drum **64**; whereupon rotation of the wash tub **30** soon ceases and the clothes may be removed from the wash tub **30** through the aligned top openings **34** and **17** to the exterior.



Considering now in greater detail the washing operation in conjunction with the control circuit **80** of FIG. 3, the operator actuates the selector switch **88** into its "wash" position and then actuates the master switch **84** into its "run" position. Operation of the master switch **84** into its "run" position closes the switch springs **85** and **86** so as to connect the line conductor **83** to the conductor **131**, whereby the rectifier **92** is operated to impress a D.-C. potential upon the conductor or bus **132** with respect to the grounded conductor **82**. An obvious circuit is thus completed for energizing the solenoid S1, so that the armature **67** thereof operates the brake shoe **62** into its set position with respect to the brake drum **61**, as previously explained. It may be assumed that both of the limit switches LS1 and LS2 are open, so that both of the limit relays LR1 and LR2 are restored, the restored limit relay LR1 retaining restored the reverse relay RR. The application of A.-C. potential upon the conductor or bus **131** with respect to the grounded conductor **82** completes an obvious circuit for energizing the winding section **53*a*** with a given polarity from the A.-C. source; while a circuit is completed for energizing the winding section **53*b*** with a polarity from the A.-C. source, depending upon the position of the reverse relay RR. At this time, when the reverse relay RR is restored, the circuit mentioned extends from the bus **131** via the contact bridging member **133** and its back contacts, the conductor **146**, the capacitor C, the conductor **145**, the elements **56*b*1** and **55*b*1**, the conductor **143**, the winding section **53*b***, the conductor **144**, the elements **55*b*2** and **56*b*2**, the conductor **147** and the contact bridging member **123** and its back contacts to the grounded conductor **82**. Thus a first polarity is employed to energize the winding section **53*b***; whereby the rotor **52** is rotated in a first direction with respect to the stator **51**, so as to move the permanent magnet **73** into close proximity to the nearest one of the limit switches LS1 or LS2, depending upon the stop position of the rotor when the main winding is energized, as described above.

It may be assumed that the permanent magnet **73** first encounters the limit switch LS1, whereby the same is closed to energize the winding of the corresponding limit relay LR1 causing operation thereof. Upon operating, the limit relay LR1 completes at its contacts **102** a stick circuit for energizing the winding thereof, and interrupts at its contacts **101** a point in the stick circuit for energizing the winding of the limit relay LR2. Also, the limit relay LR1 completes at its contacts **103** an obvious circuit for energizing the winding of the reverse relay RR, so as to effect operation thereof. Upon operating,

the reverse relay RR actuates the reversing switch **122**, **123** from its restored position into its operated position; whereby the above-traced circuit for energizing the winding section **53***b* with the first polarity from the A.-C. source is interrupted, and an obvious reverse circuit for energizing the winding section **53***b* with a second and reverse polarity from the A.-C. source is completed. Accordingly, the rotor **52** is immediately dynamically braked and then rotated with respect to the stator **51** in the opposite or second direction, so that the permanent magnet **73** is rotated toward the limit switch LS2.

When the permanent magnet **73** is moved into close proximity to the limit switch LS2, the same is closed to energize the winding of the corresponding limit relay LR2 causing operation thereof. Upon operating, the limit relay LR2 prepares at its contacts **112** a stick circuit for energizing the winding thereof, and interrupts at its contacts **111** the stick circuit for energizing the winding of the limit relay LR1. The limit relay LR1 restores to complete at its contacts **101** the prepared stick circuit for energizing the winding of the limit relay LR2, and to interrupt at its contacts **103** the circuit for energizing the winding of the reverse relay RR. The reverse relay RR then restores to actuate the reversing switch **122**, **123** from its operated position back into its restored position; whereby the above-noted circuit for energizing the winding section **53***b* with the second polarity from the A.-C. source is interrupted, and the above-traced circuit for energizing the winding section **53***b* with the first polarity from the A.-C. source is recompleted. Accordingly, the rotor **52** is immediately dynamically braked and then rotated with respect to the stator **51** in the opposite or first direction, so that the permanent magnet **73** is rotated toward the limit switch LS1.

When the permanent magnet **73** is moved into close proximity to the limit switch LS1, the same is closed to energize the winding of the corresponding limit relay LR1 causing reoperation thereof. Upon reoperating, the limit relay LR1 prepares at its contacts **102** its stick circuit for energizing the winding thereof, and interrupts at its contacts **101** the stick circuit for energizing the winding of the limit relay LR2, so as to cause the latter relay to restore and complete at its contacts **111** the stick circuit for energizing the limit relay LR1. Also, the limit relay LR1 completes at its contacts **103** the circuit for energizing the winding of the reverse relay RR, so as to effect reoperation thereof.

In view of the foregoing, it will be readily appreciated that the rotor **52** is oscillated within the stator **51** to effect the previously described washing action produced by oscillation of the agitator **40** within the wash tub **30**. The oscillation of the rotor **52** between its limit positions alternately controls the limit switches LS1 and LS2, so as to effect alternate operation and restoration of the limit relays LR1 and LR2, whereby the reverse relay RR is alternately operated and restored, so as alternately to actuate the reversing switch **122**, **123** between its two positions oppositely poling the winding section **53***b* of the main winding **53** of the motor **50** whereby the rotor **52** is oscillated, as described above.

At the conclusion of the washing operation, the operator initiates the water-extracting operation by operating the selector switch **88** from its "wash" position into its "extract" position, so as to open the switch springs **89**, **90** and to close the switch springs **89**, **91**; whereby the D.-C. potential is removed from the conductor **133** and applied to the conductor **134**. Removal of potential from the conductor **133** deenergizes the solenoid S1 so that the spring **63** returns the brake shoe **62** into its release position with respect to the brake drum **61**; and application of potential to the conductor **134** energizes the solenoid S2 so that the armature **68** operates the brake shoe **65** into its set position with respect to the brake drum **64**. Also, the removal of potential from the conductor **133** insures that both of the limit relays LR1 and LR2 and the reverse relay RR occupy their restored positions, with the result that the reversing switch **122**, **123** is positively returned into its restored position.



Accordingly, the winding section **53***b* is energized continuously with the first polarity from the A.-C.-source, so that the stator **51** is rotated continuously in the first direction effecting spinning of the wash tub **30**, so as to carry out the water-extracting operation upon the clothes contained in the wash tub **30**, in the manner previously explained.

In order to terminate the water-extracting operation, the operator restores the master switch **84** into its "stop" position, and then operates the selector switch **88** from its "extract" position into its "wash" position, so as to prepare the washing machine for another washing operation. When the master switch **84** is returned into its "stop" position, A.-C. power is removed from the conductor **131**, with the result that operation of the electric motor **50** is arrested and operation of the rectifier **92** is terminated so as to remove D.-C. potential from the conductor **132**. Removal of potential from the conductor **132** insures deenergization of the solenoids S1 and S2, with the result that the brake shoes **62** and **65** occupy their release positions with respect to the brake drums **61** and **64**, respectively.

The speed at which the stator **51** is rotated continuously during the water-extracting operation of the clothes washing machine **10** is dependent fundamentally upon the number of poles of the main winding **53**; whereby a 12-pole main winding **53** is recommended. Thus, the synchronous speed of the motor is 600 r.p.m.; whereby the stator **51** will run at a speed somewhat below the synchronous speed due to the necessary slip between the stator **51** and the rotor **52**. Thus, at a normal slip of 5% at full load, the stator **51** rotates at 570 r.p.m.; which is entirely satisfactory as a spin speed for the wash tub **30** in the water-extracting action. Now the frequency of oscillation of the agitator **40** during the washing operation employing the 12-pole electric motor **50** is determined by a number of factors, but the primary factor is the starting characteristic of the motor **50**, that is fundamentally established by the impedance of the induction winding **54**. The frequency of oscillation of the agitator **40** should fall in the general range 40 to 60 cycles per minute; whereby the start characteristic of the motor **50** is preselected so that the rotor **51** may be started and stopped and reversed about twice the frequency of 40 to 60 times per minute, or about 100 times per minute, so as to produce an oscillation of the agitator **40** at about 50 cycles per minute under medium load conditions. Thus the agitator **40** oscillates at a somewhat higher rate under light-load conditions, and at a somewhat lower rate under heavy-load conditions. Hence, the agitator **40** oscillates at a rate in the range 40 to 60 cycles per minute, centering upon about 50 cycles per minute under medium-load conditions. This characteristic may be readily obtained in the design of the induction winding between the control of the resistance and the inductance thereof within the desired range of the impedance thereof.

In view of the foregoing, it is apparent that there has been provided a clothes washing machine of improved construction and arrangement, and involving a transmission, that incorporates no mechanical gearing or equivalent complicated devices, and that fundamentally comprises only a reversible electric motor, selectively controllable to cause washing and water-extracting operations to be carried out upon the clothes. Also, the selective control of the electric motor is effected by an improved arrangement of manually operable switches that is very economical to manufacture. Further, the control of the electric motor in the washing operation employs an electrical cycle mechanism of improved connection and arrangement that is automatic and positive in operation.

While there has been described what is at present considered to be the preferred embodiment of the invention,

it will be understood that various modifications may be made therein, and it is intended to cover in the appended claims all such modifications as fall within the true spirit and scope of the invention.

What is claimed is:

1. In a clothes washing machine, a support, an upstanding shaft mounted for rotation upon said support, a frame mounted for rotation upon said shaft, an upstanding tub fixedly secured to the upper end of said frame and rotatable therewith, an upstanding agitator arranged in said tub and fixedly secured to the upper end of said shaft and rotatable therewith, oscillation of said agitator effecting washing of the clothes contained in said tub, rotation of said tub effecting centrifugal water extracting from the clothes contained therein, a first brake carried by said support and operatively associated with said frame, said first brake having set and release positions, whereby said first brake in its set position prevents rotation of said frame with respect to said support, a second brake carried by said support and operatively associated with said shaft, said second brake having set and release positions, whereby said second brake in its set position prevents rotation of said shaft with respect to said support, an electric motor including cooperating first and second field members, said first field member being fixedly secured to said frame and rotatable therewith, said second field member being fixedly secured to said shaft and rotatable therewith, cooperating first and second windings respectively carried by said first and second field members, a source of electric power, first circuit control means for operating said first brake into its set position and for energizing a predetermined one of said windings alternately with first and second polarities from said source, whereby said agitator is oscillated with said tub in a stationary position to carry out a clothes-washing operation upon the clothes contained in said tub, and second circuit control means for operating said second brake into its set position and for energizing said one winding continuously with a given polarity from said source, whereby said tub is rotated continuously with said agitator in a stationary position to carry out a water-extracting operation upon the clothes contained in said tub.

2. In a clothes washing machine, a support, an upstanding shaft mounted for rotation upon said support, a frame mounted for rotation upon said shaft, an upstanding tub fixedly secured to the upper end of said frame and rotatable therewith, an upstanding agitator arranged in said tub and fixedly secured to the upper end of said shaft and rotatable therewith, oscillation of said agitator effecting washing of the clothes contained in said tub, rotation of said tub effecting centrifugal water extracting from the clothes contained therein, a first brake carried by said support and operatively associated with said frame, said first brake having set and release positions, whereby said first brake in its set position prevents rotation of said frame with respect to said support, a second brake carried by said support and operatively associated with said shaft, said second brake having set and release positions, whereby said second brake in its set position prevents rotation of said shaft with respect to said support, an induction motor including cooperating first and second field members, said first field member being fixedly secured to said frame and rotatable therewith, said second field member being fixedly secured to said shaft and rotatable therewith, a main winding carried by said first field member, a cooperating induction winding carried by said second field member, a source of A.-C. electric power, first circuit control means for operating said first brake into its set position and for energizing said main winding alternately with first and second polarities from said source, whereby said agitator is oscillated with said tub in a stationary position to carry out a clothes-washing operation upon the clothes contained in said tub, and second circuit control means for operating said second brake into its set position and for energizing said main winding continuously with a given polarity from said source, whereby said tub is rotated continuously with said agitator in a stationary position to carry out a water-extracting operation upon the clothes contained in said tub.

3. In a clothes washing machine, a support, an upstanding shaft mounted for rotation upon said support, a frame mounted for rotation upon said shaft, an upstanding tub fixedly secured to the upper end of said frame and rotatable therewith, an upstanding agitator arranged in said tub and fixedly secured to the upper end of said shaft and rotatable therewith, oscillation of said agitator effecting washing of the clothes contained in said tub, rotation of said tub effecting centrifugal water extracting from the clothes contained therein, a first brake carried by said support and operatively associated with said frame, said first brake having set and release positions, whereby said first brake in its set position prevents rotation of said frame with respect to said support, a second brake carried by said support and operatively associated with said shaft, said second brake having set and release positions, whereby said second brake in its set position prevents rotation of said shaft with respect to said support, an electric motor including cooperating first and second field members, said first field member being fixedly secured to said frame and rotatable therewith, said second field member being fixedly secured to said shaft and rotatable therewith, cooperating first and second windings respectively carried by said first and second field members, a source of electric power, a master switch having stop and run positions, a selector switch having wash and extract positions, first circuit control means responsive jointly to operation of said master switch into its run position and to operation of said selector switch into its wash position for operating said first brake into its set position and for energizing a predetermined one of said windings alternately with first and second polarities from said source, whereby said agitator is oscillated with said tub in a stationary position to carry out a clothes-washing operation upon the clothes contained in said tub, and second circuit control means responsive jointly to operation of said master switch into its run position and to operation of said selector switch into its extract position for operating said second brake into its set position and for energizing said one winding continuously with a given polarity from said source, whereby said tub is rotated continuously with said agitator in a stationary position to carry out a water-extracting operation upon the clothes contained in said tub.

4. In a clothes washing machine, a support, an upstanding shaft mounted for rotation upon said support, a frame mounted for rotation upon said shaft, an upstanding tub fixedly secured to the upper end of said frame and rotatable therewith, an upstanding agitator arranged in said tub and fixedly secured to the upper end of said shaft and rotatable therewith, oscillation of said agitator effecting washing of the clothes contained in said tub, rotation of said tub effecting centrifugal water extracting from the clothes contained therein, a first brake carried by said support and operatively associated with said frame, said first brake having set and release positions, whereby said first brake in its set position prevents rotation of said frame with respect to said support, a second brake carried by said support and operatively associated with said shaft, said second brake having set and release positions, whereby said second brake in its set position prevents rotation of said shaft with respect to said support, an electric motor including cooperating first and second field members, said first field member being fixedly secured to said frame and rotatable therewith, said second field member being fixedly secured to said shaft and rotatable therewith, cooperating first and second windings respectively carried by said first and second field members, a source of electric power, a reversing switch having first and second positions respectively poling a predetermined one of said windings for

energization with corresponding first and second polarities from said source, a master switch having a stop position disconnecting said source from said reversing switch and a run position connecting said source to said reversing switch, whereby operation of said master switch into its run position effects energization of said one winding with a polarity from said source corresponding to the position of said reversing switch, cycle mechanism selectively operative between first and second control positions respectively actuating said reversing switch into its corresponding first and second positions, a selector switch having wash and extract positions, joint operation of said master switch into its run position and operation of said selector switch into its wash position operating said first brake into its set position and conditioning said cycle mechanism for cyclic operation, and limit mechanism selectively operative between first and second limit positions for respectively operating said conditioned cyclic mechanism between its corresponding first and second control positions, said limit mechanism being selectively operative between its first and second limit positions in response to rotation of said rotor into corresponding first and second limit positions with respect to said support, whereby said joint operation of said master switch into its run position and operation of said selector switch into its wash position also effects energization of said one winding alternately with first and second polarities from said source so that said agitator is oscillated with said tub in a stationary position to carry out a clothes-washing operation upon the clothes contained in such tub, joint operation of said master switch into its run position and operation of said selector switch into its extract position operating said second brake into its set position and positively operating said cycle mechanism into its first control position, whereby said joint operation of said master switch into its run position and operation of said selector switch into its extract position also effect energization of said one winding continuously with said first polarity from said source so that said tub is rotated continuously with said agitator in a stationary position to carry out a water-extracting operation upon the clothes contained in said tub.

5. The clothes washing machine set forth in claim 4, wherein said limit mechanism includes first and second limit switches respectively mounted in angularly spaced-apart limit positions upon said support and a control element mounted upon said shaft and rotatable therewith and respectively cooperating with said first and second limit switches when said shaft is rotated respectively into said first and second limit positions.

6. The clothes washing machine set forth in claim 5, wherein each of said limit switches comprises an armature that is actuated in response to rotation of said cooperating control element into close proximity thereto as said rotor is rotated into the corresponding one of said limit positions, and a pair of contacts governed by actuation of said armature.

7. In a clothes washing machine, a support, an upstanding shaft mounted for rotation upon said support, a frame mounted for rotation upon said shaft, an upstanding tub fixedly secured to the upper end of said frame and rotatable therewith, an upstanding agitator arranged in said tub and fixedly secured to the upper end of said shaft and rotatable therewith, oscillation of said agitator effecting washing of the clothes contained in said tub, rotation of said tub effecting centrifugal water extracting from the clothes contained therein, a first brake carried by said support and operatively associated with said frame, said first brake having set and release positions, whereby said first brake in its set position prevents rotation of said frame with respect to said support, a second brake carried by said support and operatively associated with said shaft, said second brake having set and release positions, whereby said second brake in its set position prevents rotation of said shaft with respect to said support, an induction motor including cooperating first and second field members, said first field member being fixedly secured to said frame and rotatable therewith, said second field member being fixedly secured to said shaft and rotatable therewith, a main winding carried by said first field member, a cooperating induction winding carried by said second field member, said main winding including first and second sections arranged in substantial electrically dephased relation with respect to each other, a source of A.-C. electric power, energization of said first section of said main winding with a given polarity from said source simultaneously with energization of said second section of said main winding with first or second polarities from said source effecting relative rotation of said rotor and said stator in corresponding first or second directions, a circuit network having wash and extract settings, a master switch having a stop position disconnecting said source from said circuit network and a run position connecting said source to said circuit network, and a selector switch having a wash position operating said circuit network into its wash setting and an extract position operating said circuit network into its extract setting, said circuit network in its wash setting operating said first brake into its set position and energizing said first section of said main winding continuously with said given polarity from said connected source and simultaneously energizing said second section of said main winding alternately with said first and second polarities from said connected source, whereby said agitator is oscillated to carry out a clothes-washing operation upon the clothes contained in said tub, said circuit network in its extract setting operating said second brake into its set position and energizing said first section of said main winding continuously with said given polarity from said connected source and simultaneously energizing said second section of said main winding continuously with said first polarity from said connected source, whereby said tub is rotated continuously to carry out a water-extracting operation upon the contained clothes.

8. In a clothes washing machine, a support, an upstanding shaft mounted for rotation upon said support, a frame mounted for rotation upon said shaft, an upstanding tub fixedly secured to the upper end of said frame and rotatable therewith, an upstanding agitator arranged in said tub and fixedly secured to the upper end of said shaft and rotatable therewith, oscillation of said agitator effecting washing of the clothes contained in said tub, rotation of said tub effecting centrifugal water extracting from the clothes contained therein, a first brake carried by said support and operatively associated with said frame, said first brake having set and release positions, whereby said first brake in its set position prevents rotation of said frame with respect to said support, a first solenoid controlled when energized to operate said first brake into its set position, a second brake carried by said support and operatively associated with said shaft, said second brake having set and release positions, whereby said second brake in its set position prevents rotation of said shaft with respect to said support, a second solenoid controlled when energized to operate said second brake into its set position, an electric motor including cooperating first and second field members, said first field member being fixedly secured to said frame and rotatable therewith, said second field member being fixedly secured to said shaft and rotatable therewith, cooperating first and second windings respectively carried by said first and second field members, a source of electric power, a bus, a master switch having a stop position disconnecting said source from said bus and a run position connecting said source to said bus, a selector switch having a wash position connecting said bus to said first solenoid and disconnecting said bus from said second solenoid and having an extract position connecting said bus to said second solenoid and disconnecting said bus from said first solenoid, first circuit control means responsive jointly to operation of said master switch into its run position and

to operation of said selector switch into its wash position for energizing a predetermined one of said windings alternately with first and second polarities from said source, whereby said agitator is oscillated with said tub in a stationary position to carry out a clothes-washing operation upon the clothes contained in said tub, and second circuit control means responsive jointly to operation of said master switch into its run position and to operation of said selector switch into its extract position for energizing said one winding continuously with a given polarity from said source, whereby said tub is rotated continuously with



said agitator in a stationary position to carry out a water-extracting operation upon the clothes contained in said tub.


**References Cited by the Examiner**

UNITED STATES PATENTS

| | | | |
|---|---|---|---|
| 2,764,868 | 4/54 | Williams | 68—23 |
| 2,986,915 | 6/61 | Nau | 68—12 |

FOREIGN PATENTS

| | | |
|---|---|---|
| 477,384 | 6/29 | Germany. |


CHARLES A. WILLMUTH, *Primary Examiner.*