(12) INTERNATIONAL APPLICATION PUBLISHED UNDER THE PATENT COOPERATION TREATY (PCT)

(19) World Intellectual Property Organization
International Bureau

(43) International Publication Date
15 March 2012 (15.03.2012)

PCT

(10) International Publication Number
WO 2012/033689 A1

(51) International Patent Classification:
A61B 17/04 (2006.01) *A61B 17/064* (2006.01)

(21) International Application Number:
PCT/US2011/049994

(22) International Filing Date:
31 August 2011 (31.08.2011)

(25) Filing Language: English

(26) Publication Language: English

(30) Priority Data:
61/380,884 8 September 2010 (08.09.2010) US

(71) Applicant *(for CA only)*: **SYNTHES USA, LLC** [US/US]; 1302 Wrights Lane East, West Chester, PA 19380 (US).

(71) Applicant *(for all designated States except CA, QA, RW, US)*: **SYNTHES GMBH** [CH/CH]; Eimattstrasse 3, CH-4436 Oberdorf (CH).

(72) Inventors; and

(75) Inventors/Applicants *(for US only)*: **VOISARD, Cyril** [CH/CH]; Langendorfstrasse 2, CH-4513 Langendorf (CH). **BOUDUBAN, Nicolas** [CH/CH]; Langendorstrasse 2, CH-4513 Langendorf (CH).

(74) Agents: **KAPLUN, Oleg, F.** et al.; 150 Broadway, Suite 702, New York, NY 10038 (US).

(81) Designated States *(unless otherwise indicated, for every kind of national protection available)*: AE, AG, AL, AM, AO, AT, AU, AZ, BA, BB, BG, BH, BR, BW, BY, BZ, CA, CH, CL, CN, CO, CR, CU, CZ, DE, DK, DM, DO, DZ, EC, EE, EG, ES, FI, GB, GD, GE, GH, GM, GT, HN, HR, HU, ID, IL, IN, IS, JP, KE, KG, KM, KN, KP, KR, KZ, LA, LC, LK, LR, LS, LT, LU, LY, MA, MD, ME, MG, MK, MN, MW, MX, MY, MZ, NA, NG, NI, NO, NZ, OM, PE, PG, PH, PL, PT, QA, RO, RS, RU, RW, SC, SD, SE, SG, SK, SL, SM, ST, SV, SY, TH, TJ, TM, TN, TR, TT, TZ, UA, UG, US, UZ, VC, VN, ZA, ZM, ZW.

(84) Designated States *(unless otherwise indicated, for every kind of regional protection available)*: ARIPO (BW, GH, GM, KE, LR, LS, MW, MZ, NA, SD, SL, SZ, TZ, UG, ZM, ZW), Eurasian (AM, AZ, BY, KG, KZ, MD, RU, TJ, TM), European (AL, AT, BE, BG, CH, CY, CZ, DE, DK, EE, ES, FI, FR, GB, GR, HR, HU, IE, IS, IT, LT, LU, LV, MC, MK, MT, NL, NO, PL, PT, RO, RS, SE, SI, SK, SM, TR), OAPI (BF, BJ, CF, CG, CI, CM, GA, GN, GQ, GW, ML, MR, NE, SN, TD, TG).

Published:

— *with international search report (Art. 21(3))*

[Continued on next page]

(54) Title: FIXATION DEVICE WITH MAGNESIUM CORE

(57) Abstract: A fixation device comprises a biodegradable inner core extending along a longitudinal axis from a distal tip to a proximal end in combination with a sleeve surrounding the core along a portion of a length thereof and comprising a thermoplastic polymer formed of a material which softens and expands into surrounding bone tissue when activated by an energy source.

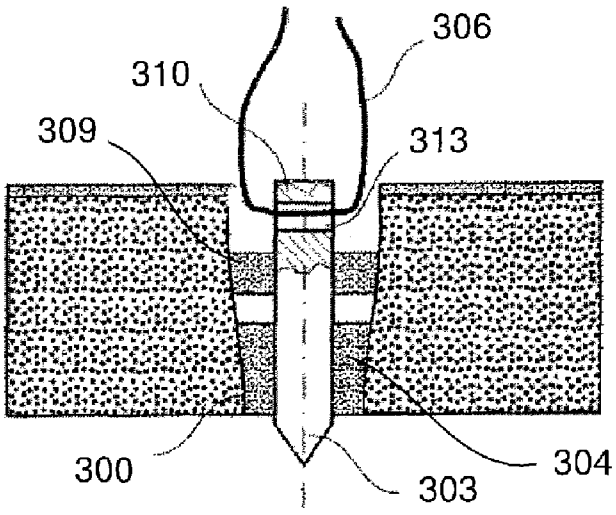

Fig. 7

WO 2012/033689 A1

— *before the expiration of the time limit for amending the claims and to be republished in the event of receipt of amendments (Rule 48.2(h))*

Fixation Device With Magnesium Core

Inventors: Cyril VOISARD and Nicolas BOUDUBAN

Priority Claim

[0001] The present application claims priority to U.S. Provisional Application Serial No. 61/380,884 filed on September 8, 2010 and entitled "Fixation Device with Magnesium Core," the entire disclosure of which is incorporated herein by reference.

Field of the Invention

[0002] The present invention generally relates to fixation devices for use in suturing of soft tissue to bone and in bone fixation. More particularly, the present invention relates to a fixation device comprising a core of a biodegradable metal or metal alloy. An exemplary embodiment of the invention relates to a method for inserting the fixation device.

Background

[0003] Soft tissue tears, bone fracture or joint dislocation all generally require a fixation device to be correctly treated. In some cases, however, drilling a hole to accommodate the fixation device and/or tapping the fixation device into the bone may damage or split the bone. These damaged bones may be repaired by inserting, for example, a revision implant therethrough. For some small and/or thin bones, however, insertion of a revision implant may be difficult or even impossible.

Summary of the Invention

[0004] The present invention relates to a bone anchor having a longitudinal axis, an inner core including a tip coaxial with the longitudinal axis and a sleeve surrounding the core and comprising a thermoplastic polymer, wherein the core comprise one of a biodegradable metal, metal alloy and glass-metal.

[0005] Bone anchors according to exemplary embodiments of the present invention allow the implant to fully resorb leaving no trace in the body and eliminating the need for a second procedure to remove them while reducing the risk of migration of the implant. The bone anchors used in accord with this invention may be monocortical and do not interfere with imaging.

[0006] A bone anchor according to one exemplary embodiment of the present invention includes a core comprising magnesium or a magnesium alloy. In a further exemplary embodiment, the anchor may include a spark anodization treated surface.

[0007] A bone anchor according to another exemplary embodiment includes a core comprising an iron alloy. The iron alloy may be formed by passivation in chromate solution, in borate buffer solution or in nitric acid. The iron alloy may be any suitable iron alloy such as, Fe35Mn.

[0008] A bone anchor according to a further exemplary embodiment has a core comprising an amorphous glass-metal, preferably a bulk metal glass.

[0009] In a further exemplary embodiment of the bone anchor, the bulk metal glass may be of the MgCaZn type such as, for example, $Mg_{63}Zn_{32}Ca_5$ and $Mg_{60}Zn_{35}Ca_5$, $Mg_{32}Zn_5Ca$ or $Mg_{35}Zn_5Ca$. These materials may be degraded with the formation of less hydrogen gas when contacted with water and a higher mechanical strength may be achieved.

[0010] A bone anchor according to a yet further exemplary embodiment includes a core comprising a non-bulk metal glass such as, for example, biodegradable magnesium alloys Mg_6ZnZr, Mg_3AlZn, $MgAl_9Zn$, $Mg_3Al_{0.4}Mn$, $Mg_6Al_{0.2}Zn$, MgYRe (Re=Rare Earth), $Mg_4Zn_{1.7}Ce_{0.6}Zr$. A typical member is known commercially as WE43.

[0011] In a still further exemplary embodiment, the non-bulk metal glass may be treated at its surface by hard anodization according to ASTM B893, spark anodization, plasma electrolyte oxidation, micro-arc oxidation (MAO) or anodization at 100V.

[0012] In another exemplary embodiment of the bone anchor, the thermoplastic polymer is biodegradable and may belong to the polylactide or caprolactone family including all the co-polymers for these families.

[0013] In another exemplary embodiment of the bone anchor, the core may be hollow such that the metallic material to be degraded may be minimized.

[0014] In again another exemplary embodiment of the bone anchor, the distal tip of the core may extend distally past a distal end of the sleeve. The distal tip of the core may be pointed so that the pointed tip can break the cortex and penetrate the bone.

[0015] In yet another exemplary embodiment of the bone anchor, the sleeve may include metallic or organic dye particles for diffracting light.

[0016] In a further exemplary embodiment, the bone anchor may additionally comprise a suture attached to the bone anchor.

[0017] In again a further exemplary embodiment of the bone anchor, the inner core may include a through bore extending transversely therethrough to allow a suture to be inserted therethrough.

[0018] In another exemplary embodiment of the bone anchor, the sleeve comprises a through opening extending transversely therethrough such that the through opening aligns with and is in communication with the through bore of the inner core.

[0019] In yet another exemplary embodiment, the bone anchor may additionally comprise an end cap attachable to the proximal end of the inner core and including a through hole extending transversely therethrough to allow a suture to be passed therethrough.

[0020] In still another exemplary embodiment of the bone anchor, the inner core comprises a hook at the proximal end of the inner core to attach a suture to the bone anchor.

[0021] According to a further aspect of the invention, the present invention relates to a method for inserting the bone anchor into a bone. The method comprising the following steps: a) inserting the bone anchor into bone by pressing the distal tip of the core thereagainst; and b) heating the sleeve by applying electromagnetic radiation through the sleeve, thereby softening and/or melting the thermoplastic polymer such that the sleeve expands into the surrounding bone tissue.

Brief Description of the Drawings

[0022] Several embodiments of the invention will be described in the following by way of example and with reference to the accompanying drawings in which:

[0023] Fig. 1 illustrates a schematic longitudinal section through a bone anchor according to a first exemplary embodiment of the present invention, before insertion into bone;

[0024] Fig. 2 illustrates the bone anchor of Fig. 1 after insertion/impaction into bone via its tip;

[0025] Fig. 3 illustrates the activation of the inserted bone anchor of Fig. 2 by irradiation of laser light through its sleeve;

[0026] Fig. 4 illustrates the softened, partly melted sleeve material of Fig. 3, which has penetrated into the surrounding bone structure;

[0027] Fig. 5 illustrates a schematic longitudinal section through a bone anchor according to a further exemplary embodiment of the present invention;

[0028] Fig. 6 illustrates a schematic longitudinal section through a bone anchor according to another exemplary embodiment of the present invention;

[0029] Fig. 7 illustrates a schematic longitudinal section through a bone anchor according to a further exemplary embodiment of the present invention; and

[0030] Fig. 8 illustrates a schematic longitudinal section through a bone anchor according to yet another exemplary embodiment of the present invention.

Detailed Description

[0031] The present invention may be further understood with reference to the following description and the appended drawings, wherein like elements are referred to with the same reference numerals. The present invention relates to the treatment of several bone and soft tissue injuries and, in particular, relates to a device that may be inserted and fixed within a bone. Exemplary embodiments of the present invention describe a fixation device, such as a bone anchor, including a sleeve that may be energy-activated to partially expand into surrounding bone tissue to fix the bone anchor therein. It should be noted that the terms "proximal" and "distal" as used herein, are intended to refer to a direction toward (proximal) and away from (distal) a surgeon or other user of the device.

[0032] Figs. 1 to 4 illustrate an embodiment of a bone anchor 1 comprising an inner core 3 extending along a longitudinal axis 2 and a sleeve 4 extending about the core 3. Additionally, the bone anchor 1 further comprises a suture 6 attached to the inner core 3 and/or the sleeve 4. The suture 6 may be used to reattach soft tissue to the bone in a simple manner. The core 3 extends from a distal end 5 to a proximal end 10 and may be formed of a biodegradable metal or metal alloy, e.g. magnesium or a magnesium alloy. In a preferred embodiment, a cross-section of the core 3 is substantially circular. For example, the inner core 3 may be a solid cylinder or, alternatively, a tube to minimize an amount of metallic material to be degraded. The distal end 5 may include a sharp and/or tapered tip such that the bone anchor 1 may be inserted into a bone 11 without having to pre-drill the bone 11. The sharp and/or tapered tip 5 may break the

cortex of the bone 11 when pressed thereagainst such that the bone anchor 1 may be inserted therein.

[0033] The sleeve 4 surrounds a perimeter of the core 3 and extends from a distal end 8 to a proximal end 9. The distal end 5 of the core 3 extends distally beyond the distal end 8 of the sleeve 4, however, so that the tapered distal tip of the core 3 may facilitate insertion of the bone anchor 1 into the bone 11. In addition, the proximal end 10 of the core 3 may also extend proximally past the proximal end 9 of the sleeve 4. Thus, the sleeve 4 may extend about the core 3, along only a portion of a length thereof. Further, the sleeve 4 may taper substantially conically from the proximal end 9 towards the distal end 8. The sleeve 4 may be formed as a coating on the inner core 3 or may be fixed to the inner core 3 in any known manner such as, for example, by a press fit.

[0034] The sleeve 4 may, for example, be comprised of a thermoplastic polymer, which may be chosen from the following groups: poly-alpha-hydroxyester, polyorthoester, polyanhydride, polyphosphazines, poly(propylenefumarate), polyesteramide, polyethylenefumarate, polylactide, polyglycolide, polycaprolacton, trimethylenecarbonate, polydioxanone, polyhydroxybutyrate, as well their copolymers and admixtures.

[0035] Further, the sleeve 4 may additionally comprise materials preferably chosen from the following groups: metals, carbon, ceramics, PEEK, non-thermoplastic polymers that are preferably chosen from the group of polymethylmethacrylate and/or inorganic materials such as potassium phosphate, calcium sulphate or bone cement. The sleeve 4 may also comprise the following chromophores and pigments: chlorophyll, carbon black, graphite, fluorescein, methylene blue, indocyanine green, eosine; eosine Y (514 nm), ethyleosine (532 nm), acridine, acridine orange, copper phtalocyanine, chrome-cobalt-aluminum oxide, ferrous ammonium citrate, pyrogallol, logwood extract, chlorophyll-copper complex, D&C blue No. 9, D&C green No. 5, [phtalocyaninate(2-)] copper, D&C blue no. 2, D&C blue no. 6, D&C green no. 6, D&C violet no. 2, D&C yellow No. 10. In one exemplary embodiment, the sleeve 4 may comprise fluorescent

chromophores which, under certain circumstances, do not absorb light but radiate off light that is absorbed from the surroundings, the polymer or any additionally introduced chromophore.

[0036] These additional materials may be provided in the form of metallic or organic dye particles distributed throughout the sleeve 4 or within a portion of the sleeve 4 through a partial volume of the sleeve 4 only. The metallic or organic dye particles may act to diffract light when the sleeve 4 is heated by a radiation device 7, e.g. a laser, as shown in Fig. 3. Additionally, the inner core 3 may act as a reflector for the electromagnetic radiation applied to the bone anchor 1 during its fixation in the bone 11. When the sleeve 4 is heated by applying electromagnetic radiation through the sleeve 4, the thermoplastic polymer is softened and partially melted so that the sleeve 4 expands into the surrounding bone tissue. After the electromagnetic radiation is turned off the material of the sleeve 4 cools off and solidifies so that the sleeve 4 is fixed in a cavity of the bone 11, as shown in Fig. 4.

[0037] According to an exemplary embodiment of the present invention, the bone anchor 1 may be inserted into the bone 11 to fix a fracture and/or fix an implant, such as a bone plate, to the fractured bone 11. The bone anchor 1 may be inserted into the bone 11, as shown in Fig. 2, by pressing the tapered distal end 5 into the bone 11. Once the bone anchor 1 has been inserted into the bone 11, as desired, the sleeve 4 is activated by an energy source 7. Suitable energy sources include a radiation device, a laser, a heat source, an electromagnetic field, a light source, or an ultrasound device. Other energy sources are of course possible as would be understood by the person skilled in the art. As shown in Fig. 3, the energy source is a heat source which heats the sleeve 4 such that the sleeve 4 partially melts, expanding into the surrounding bone tissue, as shown in Fig. 4. The melted sleeve 4 solidifies as it cools, anchoring the bone anchor 1 in the bone 11.

[0038] Fig. 5 illustrates another embodiment of a bone anchor 100 which may be substantially similar to the bone anchor 1, as described above in regard to Figs. 1 to 4.

The bone anchor 100 similarly comprises an inner core 103 surrounded by a sleeve 104, which may be heat activated. The inner core 103, however, comprises a through bore 113 extending transversely therethrough. In addition, the sleeve 104 includes a corresponding through opening 114 which aligns with the through bore 113 of the inner core 103. The through bore 113 may be located in a middle portion of the core 103 along a length of the inner core 103 while the through opening 114 may be located toward a proximal end 109 of the sleeve 104. A suture 106 may pass through the through bore 113 in the inner core 103 and said the corresponding through opening 114 in the sleeve 104 such that the suture 106 is attached to both the inner core 103 and the sleeve 104.

[0039] Fig. 6 illustrates a further embodiment of a bone anchor 200, which may be substantially similar to the bone anchor 1, as described above. The bone anchor 200 similarly comprises an inner core 203 and a sleeve 204 extending about the inner core 203. The bone anchor 200, however, additionally comprises an end cap 215 which is adapted and configured to be coupled to a proximal end 210 of the inner core 203. The end cap 215 may include, for example, a conical joining sized and shaped to be inserted into and coupled with the proximal end 210 of the core 203. The end cap 215 may include a through hole 216 extending transversely therethrough (e.g., substantially perpendicular to a longitudinal axis 202 of the bone anchor 200) allowing a suture 206 to pass therethrough such that the suture 206 may be fixed within the proximal end 210.

[0040] Fig. 7 illustrates another embodiment of a bone anchor 300, which may be substantially similar to the bone anchor 1, as described above, comprising an inner core 303 surrounded by a sleeve 304 extending about a periphery thereof. The inner core 303, however, further comprises a through bore 313 extending transversely therethrough. The through bore 313 extends through the core 303, proximate a proximal end 310 of the inner core 303 and proximally of a proximal end 309 of the sleeve 304. Thus, the suture 306 may pass through the through bore 313 of the inner core 303 without passing through any portion of the sleeve 304.

[0041] Fig. 8 illustrates yet a further embodiment of a bone anchor 400, which may be substantially similar to the bone anchor 1, as described above, comprising an inner core 403 and a sleeve 404 extending about the core 403. The inner core 403, however, further comprises a hook 417 at a proximal end 410 thereof. The hook 417 includes a ring 419 sized and shaped to receive the proximal end 410 of the inner core 403 to attach the hook 417 thereto. The ring 419 may be attached to the inner core 403 via, for example, a press fit. Alternatively, the hook 417 may include a thread 418 along an inner surface 419 of the ring 419, which engages a threaded portion of the inner core. The hook 417 facilitates attachment of a suture to the inner core 403.

[0042] The present invention has been described using an embodiment where the fixation device is a bone anchor used to suture and reattach soft tissue to bone. It will be appreciated by persons skilled in the art that other embodiments are of course possible. One such embodiment is a bone screw (not shown). The bone screw has generally the same configuration as the previously described embodiments except that the bone screw does not feature a suture. The bone screw may also include a screw head to, for example, enable the screw to act as an anchor for fixing a bone plate in position on a selected area of a bone requiring fixation.

[0043] Although the invention and its advantages have been described in detail, it should be understood that various changes, substitutions, and alterations can be made herein without departing from the spirit and scope of the invention as defined by the appended claims. Moreover, the scope of the present application is not intended to be limited to the particular embodiments of the process, machine, manufacture, composition of matter, means, methods and steps described in the specification. As one of ordinary skill in the art will readily appreciate from the disclosure of the present invention, processes, machines, manufacture, composition of matter, means, methods, or steps, presently existing or later to be developed that perform substantially the same function or achieve substantially the same result as the corresponding embodiments described herein may be utilized according to the present invention.

[0044] It will be appreciated by those skilled in the art that various modifications and alterations of the invention can be made without departing from the broad scope of the appended claims. Some of these have been discussed above and others will be apparent to those skilled in the art.

What is claimed is:

1. A fixation device, comprising:

a biodegradable inner core extending along a longitudinal axis from a distal tip to a proximal end; and

a sleeve surrounding the core along a portion of a length thereof and comprising a thermoplastic polymer formed of a material which softens and expands into surrounding bone tissue when activated by an energy source.

2. The fixation device according to claim 1, wherein the biodegradable inner core is a biodegradable metallic inner core.

3. The fixation device according to claim 2, wherein the core comprises one of magnesium and a magnesium alloy.

4. The fixation device according to claim 2, wherein the core comprises an iron alloy.

5. The fixation device according to claim 2, wherein the core comprises a bulk metal glass.

6. The fixation device according to claim 5, wherein the bulk metal glass is of a MgCaZn type.

7. The fixation device according to claim 5, wherein the bulk metal glass is one of $Mg_{63}Zn_{32}Ca_5$, $Mg_{60}Zn_{35}Ca_5$, $Mg_{32}Zn_5Ca$ or $Mg_{35}Zn_5Ca$.

8. The fixation device according to claim 1 or claim 2, wherein the core comprises a non-bulk metal glass.

9. The fixation device according to claim 8, wherein the non-bulk metal glass is one of Mg_6ZnZr, Mg_3AlZn, $MgAl_9Zn$, $Mg_3Al_{0.4}Mn$, $Mg_6Al_{0.2}Zn$, MgYRe (Re=Rare Earth), $Mg_4Zn_{1.7}Ce_{0.6}Zr$.

10. The fixation device according to claim 8, wherein the non-bulk metal glass has a surface treated by one of hard anodization and micro-arc oxidation (MAO).

11. The fixation device according to any preceding claim, wherein the thermoplastic polymer is biodegradable.

12. The fixation device according to any preceding claim, wherein the core is hollow.

13. The fixation device according to any preceding claim, wherein the distal tip of the core is tapered and extends distally past a distal end of the sleeve.

14. The fixation device according to any preceding claim, wherein the sleeve comprises one of metallic and organic dye particles that diffract light.

15. The fixation device according to any preceding claim, further comprising a suture attached to the fixation device.

16. The fixation device according to any preceding claim, wherein the inner core includes a through bore extending transversely therethrough to accommodate a suture therein.

17. The fixation device according to any preceding claim, wherein the sleeve includes a through opening extending transversely therethrough, the through opening aligned with and in communication with a through bore of the inner core.

18. The fixation device according to claim 15, further comprising an end cap attachable to the proximal end of the inner core, the end cap including a through hole extending transversely therethrough to accommodate the suture therein.

19. The fixation device according to claim 15, wherein the inner core includes a hook at the proximal end thereof to attach the suture to the fixation device.

20. The fixation device according to any preceding claim, wherein the fixation device is one of a bone anchor or a bone screw.

21. The fixation device according to any preceding claim, wherein the energy source is one of a radiation device, a laser, a heat source, an electromagnetic field, a light source, or an ultrasound device.

22. A method for inserting a fixation device into a bone, comprising the steps of:

a) inserting a fixation device into a target portion of bone by pressing a distal tip of an inner core of the fixation device into the target portion of bone, the inner core extending along a longitudinal axis of the fixation device from the distal tip to a proximal end thereof, the fixation device further comprising a sleeve extending about the inner core along a portion of a length thereof; and

b) partially melting the sleeve by applying an activation energy thereto through the sleeve to soften a thermoplastic polymer of the sleeve so that the sleeve expands into bone tissue surrounding the sleeve, fixing the fixation device therein.

23. The method of claim 22, wherein the fixation device is one of a bone anchor or a bone screw.

24. The method of claim 22 or claim 23, wherein the activation energy is applied using one of a radiation device, a laser, a heat source, an electromagnetic field, a light source, or an ultrasound.

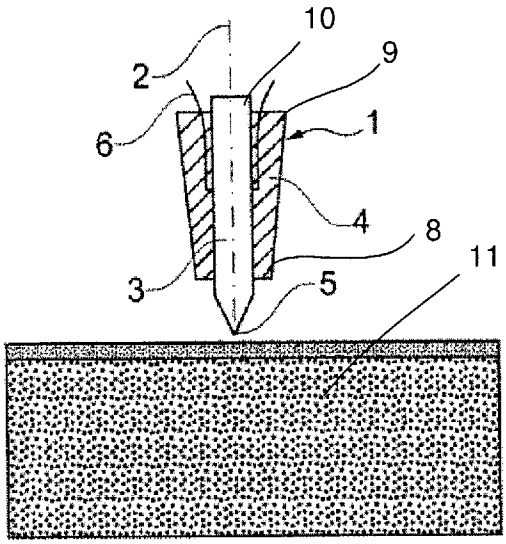

Fig. 1

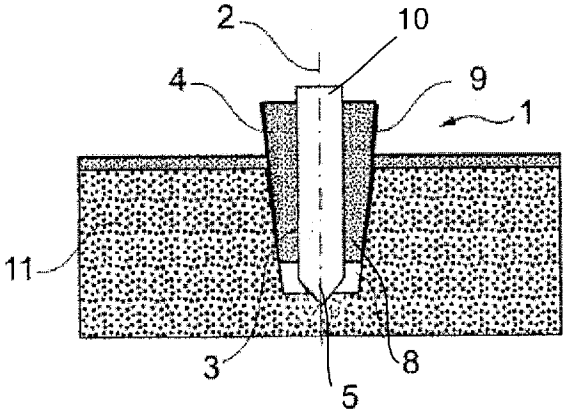

Fig. 2

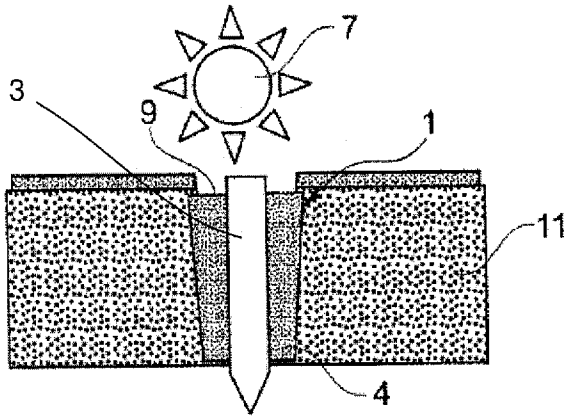

Fig. 3

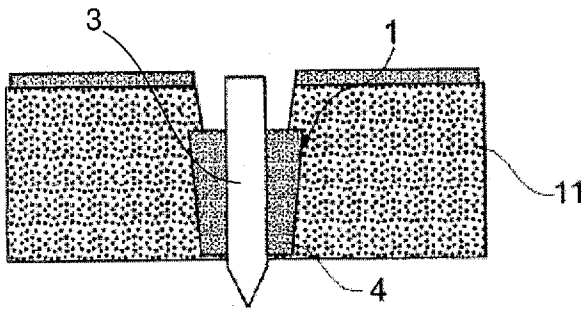

Fig. 4

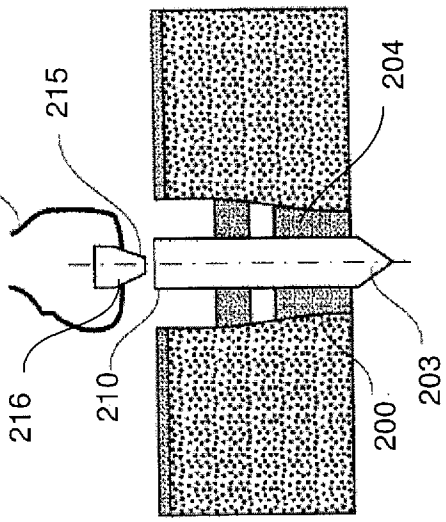

Fig. 6

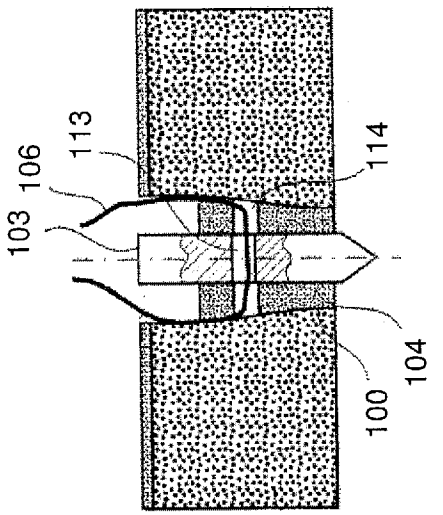

Fig. 5

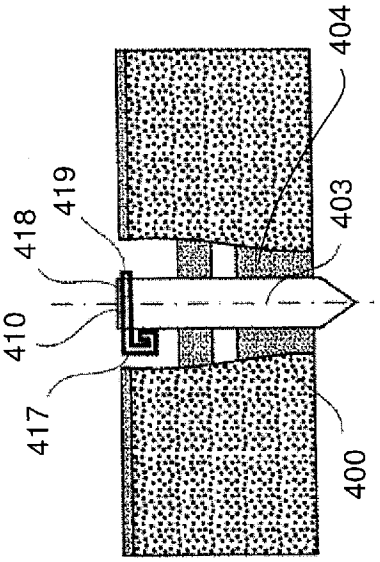

Fig. 8

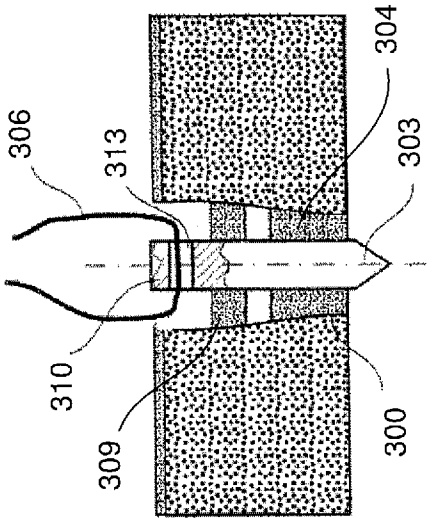

Fig. 7

INTERNATIONAL SEARCH REPORT

International application No
PCT/US2011/049994

A. CLASSIFICATION OF SUBJECT MATTER
INV. A61B17/04 A61B17/064
ADD.

According to International Patent Classification (IPC) or to both national classification and IPC

B. FIELDS SEARCHED

Minimum documentation searched (classification system followed by classification symbols)
A61B

Documentation searched other than minimum documentation to the extent that such documents are included in the fields searched

Electronic data base consulted during the international search (name of data base and, where practical, search terms used)
EPO-Internal

C. DOCUMENTS CONSIDERED TO BE RELEVANT

Category*	Citation of document, with indication, where appropriate, of the relevant passages	Relevant to claim No.
X Y	WO 2009/003294 A1 (SYNERGY BIOSURGICAL AG [CH]; BAEHRE WOLF-FRIEDRICH [CH]; RUFFIEUX KURT) 8 January 2009 (2009-01-08) pages 13-14, lines 6-30 - page 31, lines 22-37; figures 9,12,15	1-5,8, 11-13, 20,21 6,7,9, 10,14-19
Y A	DE 10 2008 037200 A1 (AAP BIOMATERIALS GMBH [DE]) 18 February 2010 (2010-02-18) paragraphs [0021] - [0025]	6,7,9 1-5,8, 10-21
Y	US 2008/234730 A1 (COTTON NICHOLAS [US] ET AL) 25 September 2008 (2008-09-25) figures 11a,b	15-19
Y	EP 1 611 852 A2 (ETHICON INC [US]) 4 January 2006 (2006-01-04) paragraphs [0034] - [0035]	10,14

-/--

[X] Further documents are listed in the continuation of Box C.

[X] See patent family annex.

* Special categories of cited documents :

"A" document defining the general state of the art which is not considered to be of particular relevance

"E" earlier document but published on or after the international filing date

"L" document which may throw doubts on priority claim(s) or which is cited to establish the publication date of another citation or other special reason (as specified)

"O" document referring to an oral disclosure, use, exhibition or other means

"P" document published prior to the international filing date but later than the priority date claimed

"T" later document published after the international filing date or priority date and not in conflict with the application but cited to understand the principle or theory underlying the invention

"X" document of particular relevance; the claimed invention cannot be considered novel or cannot be considered to involve an inventive step when the document is taken alone

"Y" document of particular relevance; the claimed invention cannot be considered to involve an inventive step when the document is combined with one or more other such documents, such combination being obvious to a person skilled in the art.

"&" document member of the same patent family

Date of the actual completion of the international search	Date of mailing of the international search report
13 February 2012	20/02/2012

Name and mailing address of the ISA/	Authorized officer
European Patent Office, P.B. 5818 Patentlaan 2 NL - 2280 HV Rijswijk Tel. (+31-70) 340-2040, Fax: (+31-70) 340-3016	Lee, Ronan

INTERNATIONAL SEARCH REPORT

International application No.
PCT/US2011/049994

Box No. II Observations where certain claims were found unsearchable (Continuation of item 2 of first sheet)

This international search report has not been established in respect of certain claims under Article 17(2)(a) for the following reasons:

1. [X] Claims Nos.: 22-24
because they relate to subject matter not required to be searched by this Authority, namely:

see FURTHER INFORMATION sheet PCT/ISA/210

2. [ ] Claims Nos.:
because they relate to parts of the international application that do not comply with the prescribed requirements to such an extent that no meaningful international search can be carried out, specifically:

3. [ ] Claims Nos.:
because they are dependent claims and are not drafted in accordance with the second and third sentences of Rule 6.4(a).

Box No. III Observations where unity of invention is lacking (Continuation of item 3 of first sheet)

This International Searching Authority found multiple inventions in this international application, as follows:

1. [ ] As all required additional search fees were timely paid by the applicant, this international search report covers all searchable claims.

2. [ ] As all searchable claims could be searched without effort justifying an additional fees, this Authority did not invite payment of additional fees.

3. [ ] As only some of the required additional search fees were timely paid by the applicant, this international search report covers only those claims for which fees were paid, specifically claims Nos.:

4. [ ] No required additional search fees were timely paid by the applicant. Consequently, this international search report is restricted to the invention first mentioned in the claims; it is covered by claims Nos.:

Remark on Protest

[ ] The additional search fees were accompanied by the applicant's protest and, where applicable, the payment of a protest fee.

[ ] The additional search fees were accompanied by the applicant's protest but the applicable protest fee was not paid within the time limit specified in the invitation.

[ ] No protest accompanied the payment of additional search fees.

FURTHER INFORMATION CONTINUED FROM PCT/ISA/ 210

Continuation of Box II.1

Claims Nos.: 22-24

The subject-matter of claims 1-19 appears to constitute a surgical procedure on the human body, and therefore under Rule 39.1(iv) PCT (Method for treatment of the human or animal body by surgery), these claims have not been searched. For the same reason, the claims do not require preliminary examination, Rule 67.1 (iv) PCT.

INTERNATIONAL SEARCH REPORT

International application No
PCT/US2011/049994

C(Continuation). DOCUMENTS CONSIDERED TO BE RELEVANT

Category*	Citation of document, with indication, where appropriate, of the relevant passages	Relevant to claim No.
A	US 2003/039676 A1 (BOYCE TODD M [US] ET AL) 27 February 2003 (2003-02-27) paragraph [0106]; figures 21,22	1-21
A	US 2007/005069 A1 (CONTILIANO JOSEPH H [US] ET AL) 4 January 2007 (2007-01-04) paragraph [0046]; figures 1e,9	1-21
A	EP 1 506 790 A1 (DEPUY MITEK INC [US]) 16 February 2005 (2005-02-16) paragraphs [0031], [0033]	1-21
A	WO 03/070108 A1 (DEGIMA MEDIZINPRODUKTE GMBH [DE]; TSCHAKALOFF ALEXANDER [DE]; VON OEPE) 28 August 2003 (2003-08-28) figures 1,2,4	1-21

INTERNATIONAL SEARCH REPORT

Information on patent family members

International application No
PCT/US2011/049994

Patent document cited in search report	Publication date	Patent family member(s)	Publication date
WO 2009003294 A1	08-01-2009	AU 2007356033 A1	08-01-2009
		CA 2692407 A1	08-01-2009
		CN 102014762 A	13-04-2011
		EP 2162072 A1	17-03-2010
		JP 2010531680 A	30-09-2010
		US 2010241229 A1	23-09-2010
		WO 2009003294 A1	08-01-2009
DE 102008037200 A1	18-02-2010	CN 102170921 A	31-08-2011
		DE 102008037200 A1	18-02-2010
		EP 2318057 A2	11-05-2011
		US 2011313527 A1	22-12-2011
		WO 2010017959 A2	18-02-2010
US 2008234730 A1	25-09-2008	AU 2008230981 A1	02-10-2008
		EP 2136857 A2	30-12-2009
		JP 2010536397 A	02-12-2010
		US 2008234730 A1	25-09-2008
		WO 2008118782 A2	02-10-2008
EP 1611852 A2	04-01-2006	AU 2005202702 A1	12-01-2006
		CA 2510345 A1	28-12-2005
		EP 1611852 A2	04-01-2006
		JP 2006006955 A	12-01-2006
		US 2005288682 A1	29-12-2005
		US 2011152930 A1	23-06-2011
US 2003039676 A1	27-02-2003	US 2003039676 A1	27-02-2003
		US 2007233272 A1	04-10-2007
		US 2008188945 A1	07-08-2008
US 2007005069 A1	04-01-2007	AU 2006263421 A1	04-01-2007
		CA 2613941 A1	04-01-2007
		EP 1895912 A1	12-03-2008
		JP 2009500081 A	08-01-2009
		US 2007005069 A1	04-01-2007
		WO 2007002919 A1	04-01-2007
EP 1506790 A1	16-02-2005	AU 2004203671 A1	03-03-2005
		CA 2475905 A1	11-02-2005
		EP 1506790 A1	16-02-2005
		JP 2005131365 A	26-05-2005
		US 2005038520 A1	17-02-2005
WO 03070108 A1	28-08-2003	AU 2003215582 A1	09-09-2003
		EP 1485029 A1	15-12-2004
		US 2007198017 A1	23-08-2007
		WO 03070108 A1	28-08-2003