(19) Europäisches Patentamt
European Patent Office
Office européen des brevets

(11) **EP 2 081 658 B1**

(12) **EUROPEAN PATENT SPECIFICATION**

(45) Date of publication and mention of the grant of the patent:
17.12.2014 Bulletin 2014/51

(21) Application number: **07825672.4**

(22) Date of filing: **14.11.2007**

(51) Int Cl.:
A63G 1/10 *(2006.01)*

(86) International application number:
PCT/IB2007/003496

(87) International publication number:
WO 2008/059356 (22.05.2008 Gazette 2008/21)

(54) **AMUSEMENT MERRY-GO-ROUND DEVICE**

FAHRGESCHÄFT-KARUSSELLVORRICHTUNG

MANÈGE

(84) Designated Contracting States:
AT BE BG CH CY CZ DE DK EE ES FI FR GB GR HU IE IS IT LI LT LU LV MC MT NL PL PT RO SE SI SK TR

(30) Priority: **14.11.2006 IT MI20062185**

(43) Date of publication of application:
29.07.2009 Bulletin 2009/31

(73) Proprietor: **ANTONIO ZAMPERLA S.p.A.**
36077 Altavilla Vicentina (Vicenza) (IT)

(72) Inventors:
- **ZAMPERLA, Alberto**
  36077 Altavilla Vicentina (VI) (IT)
- **NARDIN, Antonio**
  36077 Altavilla Vicentina (VI) (IT)

(74) Representative: **Gislon, Gabriele**
Marietti, Gislon e Trupiano S.r.l.
Via Larga 16
20122 Milano (IT)

(56) References cited:
EP-B- 1 034 823
FR-A- 2 618 690
US-A- 2 922 648

Note: Within nine months of the publication of the mention of the grant of the European patent in the European Patent Bulletin, any person may give notice to the European Patent Office of opposition to that patent, in accordance with the Implementing Regulations. Notice of opposition shall not be deemed to have been filed until the opposition fee has been paid. (Art. 99(1) European Patent Convention).

EP 2 081 658 B1

Description

Field of the invention

[0001] The present invention concerns an amusement device in the form of a revolving ride, or meny-go-round.

Background of the invention

[0002] Revolving rides, or carousels, provided with arms bearing at each end a vehicle that can accommodate one or more passengers are known in the art. Generally, said rides comprise pneumatic or hydraulic means to lift the vehicle and then lower it either cyclically or in response to a passenger's command. EP 1034823 describes a single amusement device comprising a seat to accommodate a child, two bicycle pedals and means for measuring the pedalling speed and consequently operating, in on-off mode, a device for lifting the seat which is substantially identical to the lifting devices used for moving pallets and similar. In other words, EP 1034823 only permits to vertically lift a single seat with a single child along a frame and to revolve the supporting platform of the same. Presumably for this reason, the use of device of EP 1034823 is restricted to children only, as can be read in the text and in claim 1. A further problem of EP 1034823 is that the lifting device is an hydraulic device and is directly operated by a motor.

[0003] FR-A-2618690 describes a flight simulation device which, among the various embodiments shown, comprises the possibility for the user to operate a propeller by means of a pedal unit and, in said way, to lift the vehicle to a greater or lesser extent. The disadvantage of said embodiment is that the elevation of the vehicle is substantially directly connected to the movement of the pedal unit; the presence of a counterweight does not eliminate the problem of elevation of the vehicle depending on the muscular force of the passenger.

Summary of the invention

[0004] The present invention provides a revolving ride according to claim 1 and a method of operating according to claim 10.

[0005] The object of the present invention is to solve the above mentioned problems and to provide an amusement device in which the passengers are transported in one of a plurality of vehicles of a revolving ride and in which they can interact with the same to control the elevation of the vehicle by means of their own physical activity without a physical effort.

[0006] Said object is achieved by means of the present invention which concerns a revolving ride (or merry-go-round), comprising a plurality of arms bearing a vehicle, and means for lifting said arms comprising lifting cylinders, characterised in that said lifting cylinders are dual-chamber cylinders and in that it comprises means that can be moved by at least one passenger on the vehicle at a speed that can be measured, means for measuring said speed of said movable means and for generating a corresponding signal and means for commanding operation of said cylinders according to said at least one speed.

[0007] According to an aspect of the invention, the system is a pneumatic system and there is at least one motor to operate at least one compressor which supplies compressed air to a tank from which the lifting cylinders draw.

[0008] According to another aspect of the invention, the system is an hydraulic system and there is at least one motor to operate a variable displacement pump, the motor being always working when the ride works.

[0009] According to another preferred aspect of the invention, the means for controlling operation of said cylinders comprise a control unit, an electrovalve and a timer to delay activation of the electrovalve.

[0010] According to a further aspect of the invention, the means movable by the passenger comprise a phonic wheel that can be operated by the pedals of one or more bicycles.

[0011] According to a further aspect of the invention, the electrovalve has such a capacity to slowly and gradually lift and lower the vehicle.

[0012] According to a further aspect of the invention, the vehicle is connected to the revolving ride by means of two arms positioned at different heights, said arms forming a parallelogram with said vehicle and said structure.

[0013] The invention has several advantages if compared with the known art. Firstly, the device allows to have a ride which is much more amusing than those obtained with the above discussed known devices, in particular the user is brought along a circumference together with other identical vehicles, for example 6 in all, and has the impression of being able to control the height of his vehicle according to the pedalling speed, but without having to make the corresponding physical effort.

[0014] Moreover, by using a fluidic system in which the signal of the pedalling speed is related to the operation of the electrovalve, only, it was possible to move up from the single seat, vertically moving device of the known art to the merry-go-round having several arms and seats, of the present invention.

[0015] Thanks to the timer and to the regulation of the capacity of the valve supplying air from the tank to the second chamber of the cylinder, said impression remains even if the device is of the non-proportional type, i.e. when raising and lowering of the vehicle depend on one single speed threshold being reached, above which the valve opens and the cylinder lifts the vehicle, and vice versa.

Brief description of the figures

[0016] These advantages will be further highlighted by the following description and by the drawings enclosed for illustrative and non-restrictive purposes, in which:

- fig. 1 is a schematic side view of the device according to the invention;
- fig. 2 is a top view of the device shown in fig. 1;
- fig. 3 and fig. 4 are partially sectioned side views of the device with the vehicle at different heights;
- fig. 5 is a view of dual chamber piston according to the invention;
- fig. 6 is a scheme of a pneumatic system for operating the pistons of the device according to the invention;
- fig. 7 is a scheme of an hydraulic plant for operating the pistons of the device according to the invention;
- fig. 8 is a scheme of the control unit for operating a vehicle of the ride of the invention.

Embodiments of the invention

[0017] As shown in figure 1 and 2, the device of the invention is of the revolving ride type and comprises a central structure composed of a base 2 and a revolving part 3. The base comprises at least one motor (not shown) to make the ride revolve and at least part of the fluidic circuit which operates the above discussed arms. The fluidic circuit which is present on base 2 comprises a motor to operate the means for pressurizing fluid, that means a compressor if a pneumatic circuit is used or a pump, preferably a variable displacement pump, if an hydraulic circuit is used.

[0018] The revolving part 3 comprises part of the pneumatic or hydraulic system and a plurality of arms 5 supporting a corresponding plurality of vehicles 6. A cylinder 7, namely a dual-chamber cylinder, is also provided for each arm 5 in order to operate said arms 5.

[0019] In the embodiment shown in fig. 3, 4 and 6, in which a pneumatic circuit is described, on the base 2 two motors 4 and 4' are provided (fig. 3, 4 and 6) to operate correspondent compressors 18, while in the embodiment of fig. 7, which is referred to an hydraulic circuit, a motor 28 is present, which operates a variable displacement pump 29.

[0020] The vehicle 6 is preferably in the form of two bicycles 6A and 6B positioned side by side, provided with pedals 8, and is surmounted by a wing 12 with a shape similar to that of a hang-glider, but asymmetrical. The supporting structure 9 of the vehicle 6 is connected to the flange 10 of the revolving part 3 by means of the arm 5. The cylinder 7 is hinged on the arm 5 at its upper end, the lower end of the cylinder 7 being hinged to a flange 10' integral with the structure 3. Above the arm 5 is an additional arm 11, which extends from the supporting structure 9 of the vehicle, where it is hinged, to the above-mentioned flange 10 of the revolving portion 3; the two arms 5 and 11 thus form, with the structure 9 and the flange 10, a parallelogram which allows the vehicle to be tilted as it is raised, as can be seen in the figures, until reaching the maximum tilt value corresponding to the angle α of fig. 4. Said angle is preferably between 12 and 21 degrees and more preferably of approximately 16 degrees.

[0021] As mentioned above, the invention comprises means that can be moved by at least one passenger present on the vehicle 6 at a measurable speed, means 13 for measuring the speed of the means moved, or operated, by the passenger and for generating a corresponding signal, as well as means for controlling the operation of the cylinders 7 according to the one or more signals generated by at least one measured speed.

[0022] With reference to fig. 8, in the embodiment shown the means that can be moved by the passenger consist of the pedals 8 of the bicycle. Since two bicycles are positioned side by side to form the vehicle 6, preferably both bicycles are connected to speed measuring means 13 to measure the speed at which the pedals 8 of the bicycle are moved, thus permitting the lifting of the arm even if only one passenger is present. The two bicycles are connected to the means 13 preferably in a way that enables the measurement of the highest speed of the two bicycles, without interfering with their use by different passengers. This, for example, allows the device to be used simultaneously by an adult and a child.

[0023] The means 13 are able to measure at least one speed of the pedals 8, i.e. they can operate in on/off mode and generate a signal if a pre-set and stored speed threshold is reached, or they can operate in proportional mode and generate signals corresponding to the speed at which the pedals are operated. Suitable means for on/off operation are, for example, phonic wheels (toothed wheels provided with a fixed proximity switch), centrifugal switches, magnetic systems and relative dedicated boards; suitable systems to generate proportional signals are dynamos, in particular speedometric dynamos, which generate a variable voltage.

[0024] The phonic wheel is a preferred solution because it is reliable in the long term and easy to operate. A suitable phonic wheel comprises a number of teeth in the range between 20 and 30.

[0025] As shown in the scheme of fig. 8, the phonic wheel, or other means, 13, generates a signal which is sent to a central control unit 14, to which the other vehicles 6 are connected and which is connected to the electrovalves 15 which control the supply of fluid to the lifting cylinders. In the above-mentioned case, the valves 15 are operated and switched to the open position only when the signal generated by the phonic wheel(s) 13 is higher than a pre-set value.

[0026] Each of the cylinders 7 is provided (fig. 5) with a dual chamber, i.e. a lower smaller chamber referred to with 7A, and an upper larger chamber referred to with 7B. Chamber 7A has the function of lifting the vehicles when the ride starts working in order to avoid the contact with the ground, the main chamber 7B causes the lift and the descent of the arm according to the opening of the correspondent electrovalve 15, which is opened or closed by the control unit 14 according to the signals coming to said control unit 14 from phonic wheels or other measurement means of the pedalling speed.

[0027] When the electrovalve 15 is switched to the open position, a fluid (generally air) coming from one or more storage tanks is supplied to the cylinder 7B and the vehicle is raised; when the signal from 13 is below the pre-set value, the valve 15 is closed and the cylinder moves down.

[0028] Preferably, the closing step of valve 15 is also controlled by a timer 16 which maintains the supply of compressed air to the cylinder 7B even after the value of the signal generated by 13 has dropped below the pre-set threshold value. Said period of time is generally equal to a few seconds, for example four seconds, and prevents immediate lowering of the vehicle when the pedalling action is temporarily interrupted. In addition, the capacity of electrovalve 15 is regulated so as to generate a gradual filling and emptying of the corresponding chamber (or cylinder) of the piston 7B and therefore a gradual raising and descent of the vehicle 6.

[0029] Fig. 6 shows the pneumatic system according to the invention. Here two compressors 18 operated by the relative motors 4 and 4' supply pressurized air to a circuit which comprises, on the fixed part 2 of the ride, together with the compressors, a spare tank 19, the remaining part of the circuit being generally housed on the revolving part of the ride. In one embodiment, motors 4 and 4' also cause the rotation of part 3 on the base 2 for instance on bearings 17.

[0030] In particular, the circuit comprises further tanks 20 which are connected by means of a filter 21 and a pressure reducer 22 to an air flow distribution block 23. The block 23 is connected to the electrovalves 15 which control the supply of the larger chamber 7B, and also of a further electrovalve 24 which controls, in a centralised and simultaneous way, the supply of air to a second distribution block 25 which is directly connected to the smaller chambers 7A.

[0031] The smaller chamber 7A is fed with pressurized air when the ride is operated, so as to raise all the vehicles 6 to position A shown on the right of fig. 3: in this position the vehicles 6 can be rotated with the ride by the arms 5 without the passengers coming into contact with the ground.

[0032] The larger chamber 7B is fed when the control means 14 have detected the signal with pre-set threshold value, or proportionally to the signal generated (for example if a dynamo is used to generate a proportional signal). When air is fed, the vehicle 6 is raised from the passenger boarding position A to position B of fig. 3 and then to positions C and D of fig. 4.

[0033] Fig. 7 shows an embodiment of hydraulic circuit according to the invention. As shown, a motor 28 operates a pump 29 which draws from a tank 30 to which it can return all, nothing or part of the fluid drawn from it with line 31. Pump 29 is connected by means of line 32 with all the smaller chambers 7A by means of a single first electrovalve Ev1 which controls the supplying of oil to the chambers 7A of the cylinders 7. The pump 29 is also connected with larger chambers 7B of each cylinder 7 by means of correspondent electrovalves Ev2-Ev7, in a similar way to that above described for the embodiment concerning the hydraulic circuit.

[0034] The larger chambers 7B of cylinders 7 are furthermore provided with accumulators 33 to allow a gradual raising of arms 5 when the signal of the means 13 reaches the pre-set threshold. An exhaust block 34 comprising an exchanger 35 completes the circuit.

[0035] The working of the device is similar to the one described above for the pneumatic circuit. The motor 28 which operates the hydraulic pump 8 is always working and the machine cycle develops as follows:

1) Start
2) Excitation of electrovalve Ev1: the lower jackets (short i.e. small chambers) 7A of cylinders 7 are fed and the arms raise from ground.
3) Starting of the rotation of the machine by means of the rotation motor, that, as above mentioned, is a standard electric motor and is not shown in the figures,
4) Depending on passengers' pedalling, one or more of the electrovalves Ev2-Ev7 excite (on/off), each independently from the others.

[0036] To the excitement of electrovalve EvX corresponds a fluid delivery in the upper chamber (long) 7B of the correspondent cylinder 7 and a correspondent lifting of the arm 5. To the dropping out of electrovalve EvX (no longer excited) corresponds an oil flow from upper chamber (long) 7B of the cylinder 7 to tank 30 and a corresponding lowering of arm 5.

[0037] At the end of the cycle all valves Ev1, Ev2-Ev7 are dropped out, arms lower and rotation is stopped at the same time.

[0038] As in the previous case concerning the compressor, in the hydraulic circuit the variable displacement pump 29 is always working by means of motor 28 and adjusts its capacity according to the use requirements. In other words, if all electrovalves Ev2-Ev7 are dropped out, pump supplies no capacity, if all Ev are simultaneously excited, that is if all passengers simultaneously pedal and generate required signal, it supplies maximum available supply.

[0039] As above mentioned, the signal generated in 13 and transmitted to the control unit 14 is used to operate valve 15 (pneumatic or the electrovalved Ev2-Ev7) and not, as in the previous art, to operate motors. The cylinder 7B, which causes the lifting or the lowering of vehicle 6, receives air from one of the tanks 20, in which pressurized air coming from the compressor is put in, or it receives oil from pump 29 which draws it from tank 30. The said tanks or pump also feed smaller cylinders 7A, which help the minimum lifting of the vehicle. The functioning of motors 4 and 4' or 28 is therefore not depending on pedalling speed or rather on the signal generated by the phonic wheel; for example, in one embodiment a continuous operating of the compressors during working of the ride is

provided.

[0040] In this way, that is by means of a pneumatic plant with storage tanks or by means of an hydraulic plant, it was possible to free the operation of motors from the signal connected with pedalling speed, said signal being instead connected, through control unit 13, with the operation of valves 15 of lifting cylinders. Thanks to this it was possible to use only one or two motors for an embodiment as the shown one, which provides the presence of six vehicles with two seats each. In such embodiment motors are one with 12 Kw or two with 5,5 Kw and enable to reach 6 rpm (revolutions per minute) with an hourly capacity of up to 240 persons.

[0041] The control unit 14 furthermore controls the operation of a further element, again according to the operating speed of the pedals 8. In this case the element is a propeller 26 which is operated by a motor 27 preferably in a proportional way to the speed of the pedals for an improved simulation of the "flight" speed of the vehicle.

Claims

1. A revolving ride (1) device comprising a plurality of arms (5) bearing a vehicle (6), and means for lifting said arms comprising lifting cylinders *(7), whereby* said lifting cylinders are dual-chamber cylinders (7A, 7B) and *whereby the revolving ride device further* comprises means (8) that can be moved by at least one passenger on the vehicle (6) at a measurable speed, means (13) for measuring said speed of said movable means and generating a corresponding signal and means (14, 15) for controlling operation of said cylinders (7) according to said at least one speed.

2. Device as claimed in claim 1, wherein said means for controlling the operation of said cylinders comprises a control unit (14), a valve (15) which can be activated by said control unit and a timer (16) for delaying the activation of said valve (15).

3. Device as claimed in claim 1 or 2 wherein said valve (15) is connected to a storage tank (20) of a pneumatic circuit.

4. Device as claimed in claim 1 or 2 wherein said valve is connected to an hydraulic circuit comprising a motor and a variable displacement pump.

5. Device as claimed in any claim 1 to 4, wherein said means (8) that can be moved by the passenger are bicycle pedals.

6. Device as claimed in any claim 1 to 5, wherein said means (13) for measuring the speed of the movable means (8) comprise a phonic wheel that can be operated by the movable means.

7. Device as claimed in any previous claim, wherein said vehicle (6) is connected to the revolving ride (1) by means of two arms (5, 11) positioned at different heights, said arms forming a parallelogram with said vehicle and said ride.

8. Device as claimed in any claim 2 to 6, wherein said control unit (14) controls operation of at least one further device (27, 26) according to the signal received from said speed measuring means (13).

9. Device as claimed in any previous claim, further comprising a dynamo to generate a proportional speed signal.

10. A method to operate the lifting of at least one arm of a revolving ride device according to any previous claim, **characterised in that** it comprises the steps of pressurizing a fluidic circuit comprising dual chamber cylinders (7), measuring the operating speed of the user-movable means (8, 13) and controlling the opening of a valve (15) provided on a chamber (7B) of said cylinders when said operating speed exceeds a pre-set value.

Patentansprüche

1. Eine sich drehende Fahrgeschäft-Vorrichtung (1) enthaltend eine Vielzahl von Armen (5), die eine Fahrgastgondel (6) tragen, und Mittel zum Anheben der Arme enthaltend Hubzylinder (7), wobei die Hubzylinder zweikammerige Zylinder (7A, 7B) darstellen und wobei die sich drehende Fahrgeschäft-Vorrichtung weiterhin Mittel (8) umfasst, die von mindestens einem Fahrgast in der Fahrgastgondel (6) mit einer messbaren Geschwindigkeit bewegt werden können, Mittel (13) zur Messung der Geschwindigkeit der beweglichen Mittel und zur Erzeugung eines entsprechenden Signals und Mittel (14, 15) zur Steuerung des Betriebs der Zylinder (7) gemäß der mindestens einen Geschwindigkeit.

2. Die Vorrichtung gemäß Anspruch 1, wobei die Mittel zur Steuerung des Betriebs der Zylinder eine Steuereinheit (14), ein Ventil (15), das durch die Steuereinheit aktiviert werden kann, und ein Zeitschaltgerät (16) zur Verzögerung der Aktivierung des Ventils (15) beinhalten.

3. Die Vorrichtung gemäß Anspruch 1 oder 2, wobei das Ventil (15) mit einem Speicherbehälter (20) eines pneumatischen Kreislaufs verbunden ist.

4. Die Vorrichtung gemäß Anspruch 1 oder 2, wobei das Ventil (15) mit einem hydraulischen Kreislauf verbunden ist, der einen Motor und eine Verstellpumpe aufweist.

5. Die Vorrichtung gemäß irgendeinem der Ansprüche 1 bis 4, wobei die Mittel (8), die durch den Fahrgast bewegt werden können, Fahrradpedale darstellen.

6. Die Vorrichtung gemäß irgendeinem der Ansprüche 1 bis 5, wobei die Mittel (13) zur Messung der Geschwindigkeit der beweglichen Mittel (8) ein phonisches Rad aufweisen, das durch die beweglichen Mittel angetrieben werden kann.

7. Die Vorrichtung gemäß irgendeinem der vorherigen Ansprüche, wobei die Fahrgastgondel (6) mit Hilfe von zwei Armen (5, 11) mit der sich drehenden Fahrgeschäft-Vorrichtung verbunden ist, die auf unterschiedlicher Höhe angebracht sind, wobei die Arme mit der Fahrgastgondel und dem Fahrgeschäft ein Parallelogramm bilden.

8. Die Vorrichtung gemäß irgendeinem der Ansprüche 2 bis 6, wobei die Steuereinheit (14) den Betrieb von mindestens einer weiteren Einrichtung (27, 26) gemäß des von den Mitteln (13) zur Geschwindigkeitsmessung erhaltenen Signals gesteuert wird.

9. Die Vorrichtung gemäß irgendeinem der vorherigen Ansprüche, weiterhin enthaltend einen Stromerzeuger zur Erzeugung eines dem Verhältnis entsprechenden Geschwindigkeitssignals.

10. Ein Verfahren zum Anheben von zumindest einem Arm einer sich drehenden Fahrgeschäft-Vorrichtung gemäß irgendeinem der vorherigen Ansprüche, **dadurch gekennzeichnet, dass** es die Schritte umfasst:

> Unter Druck Setzen eines fluiden Kreislaufes enthaltend zweikammerige Zylinder (7);
> Messung der Betriebsgeschwindigkeit der von den Benutzern bewegbaren Mittel (8, 13); und
> Steuerung des Öffnens eines in einer Kammer (7B) der Zylinder angebrachten Ventils (15) wenn die Betriebsgeschwindigkeit einen voreingestellten Wert übersteigt.

Revendications

1. Dispositif de manège tournant (1) comprenant une pluralité de bras (5) portant un véhicule (6), et des moyens pour lever lesdits bras comprenant des vérins de levage (7), moyennant quoi lesdits vérins de levage sont des vérins à double chambre (7A, 7B) et moyennant quoi le dispositif de manège tournant correprend en outre des moyens (8) qui peuvent être déplacés par au moins un passager sur le véhicule (6) à une vitesse mesurable, des moyens (13) pour mesurer ladite vitesse desdits moyens mobiles et générer un signal correspondant et des moyens (14, 15) pour commander le fonctionnement desdits vérins (7) selon ladite au moins une vitesse.

2. Dispositif selon la revendication 1, dans lequel lesdits moyens pour commander le fonctionnement desdits vérins comprennent une unité de commande (14), une soupape (15) qui peut être activée par ladite unité de commande et une minuterie (16) pour retarder l'activation de ladite soupape (15).

3. Dispositif selon la revendication 1 ou 2, dans lequel ladite soupape (15) est reliée à un réservoir de stockage (20) d'un circuit pneumatique.

4. Dispositif selon la revendication 1 ou 2, dans lequel ladite soupape (15) est reliée à un circuit hydraulique comprenant un moteur et une pompe à déglacement variable.

5. Dispositif selon l'une quelconque des revendications 1 à 4, dans lequel lesdits moyens (8) qui peuvent être déplacés par le passager sont des pédales de bicyclette.

6. Dispositif selon l'une quelconque des revendications 1 à 5, dans lequel lesdits moyens (13) pour mesurer la vitesse des moyens mobiles (8) comprennent une roue phonique qui peut être mise en fonctionnement par les moyens mobiles.

7. Dispositif selon l'une quelconque des revendications précédentes, dans lequel ledit véhicule (6) est relié au manège tournant (1) à l'aide de deux bras (5, 11) positionnés à différentes hauteurs, lesdits bras formant un parallélogramme avec ledit véhicule et ledit manège.

8. Dispositif selon l'une quelconque des revendications 2 à 6, dans lequel ladite unité de commande (14) commande le fonctionnement d'au moins un dispositif supplémentaire (27, 26) selon le signal reçu desdits moyens de mesure de la vitesse (13).

9. Dispositif selon l'une quelconque des revendications précédentes, comprenant en outre une dynamo pour générer un signal de vitesse proportionnelle.

10. Procédé de mise en fonctionnement du levage d'au moins un bras d'un dispositif de manège tournant selon l'une quelconque des revendications précédentes, **caractérisé en ce qu'**il comprend les étapes de pressurisation d'un circuit fluidique comprenant des vérins à double chambre (7), la mesure de la vitesse de fonctionnement des moyens prouvant être déplacés par l'utilisateur (8, 13) et la commande de l'ouverture d'une soupape (15) fournie sur une chambre (7B) desdits vérins lorsque ladite vitesse de fonctionnement excède une valeur prédéfinie.

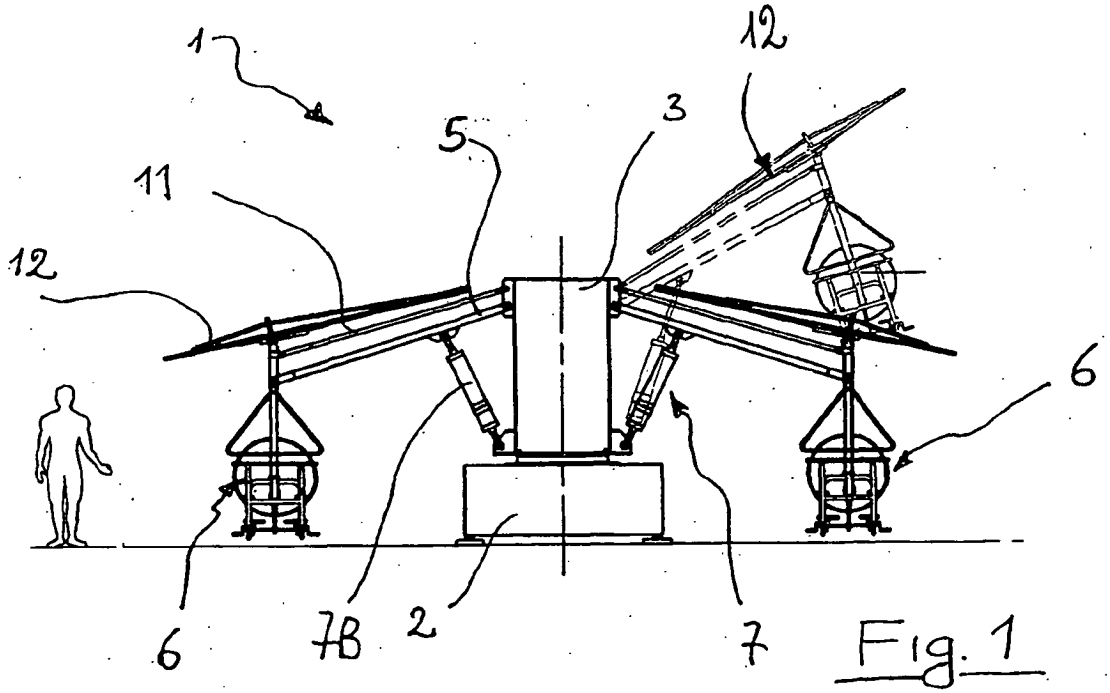

Fig. 1

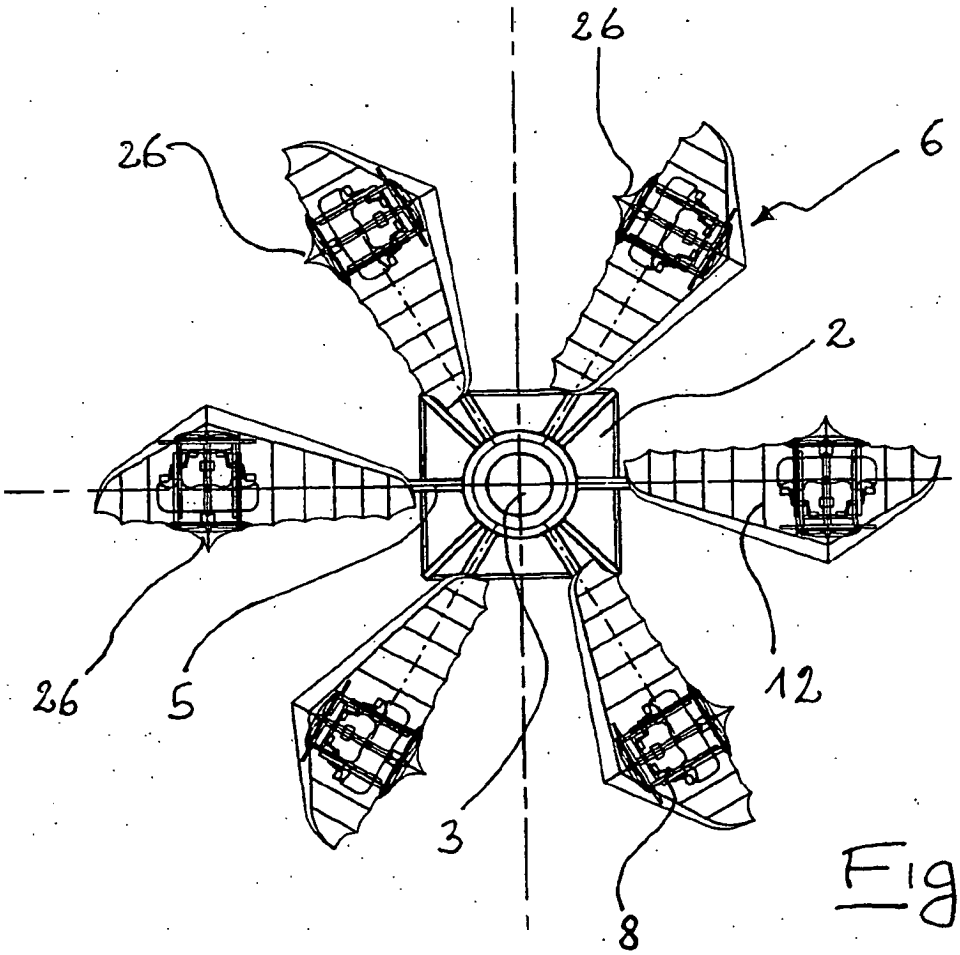

Fig. 2

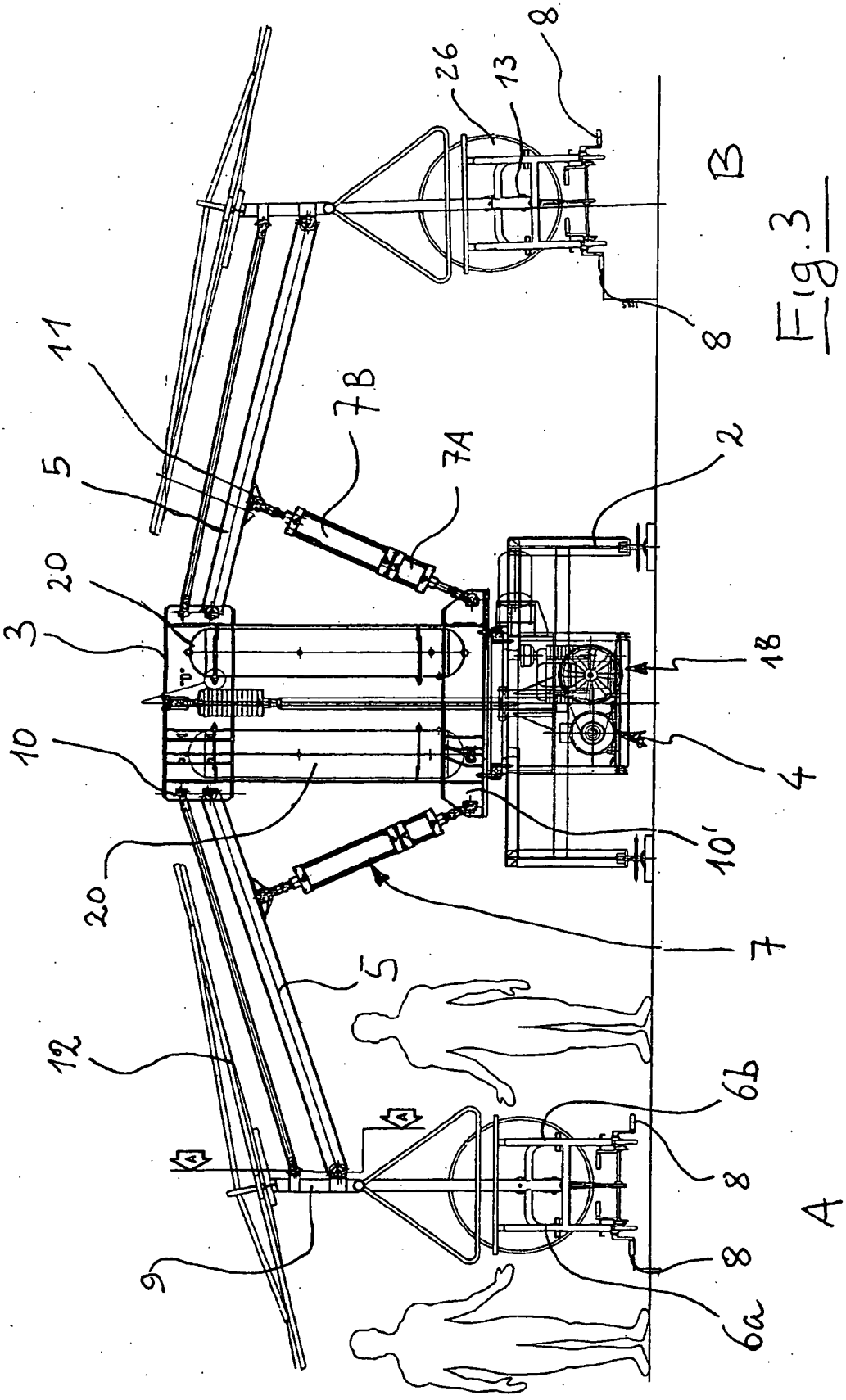

Fig.3

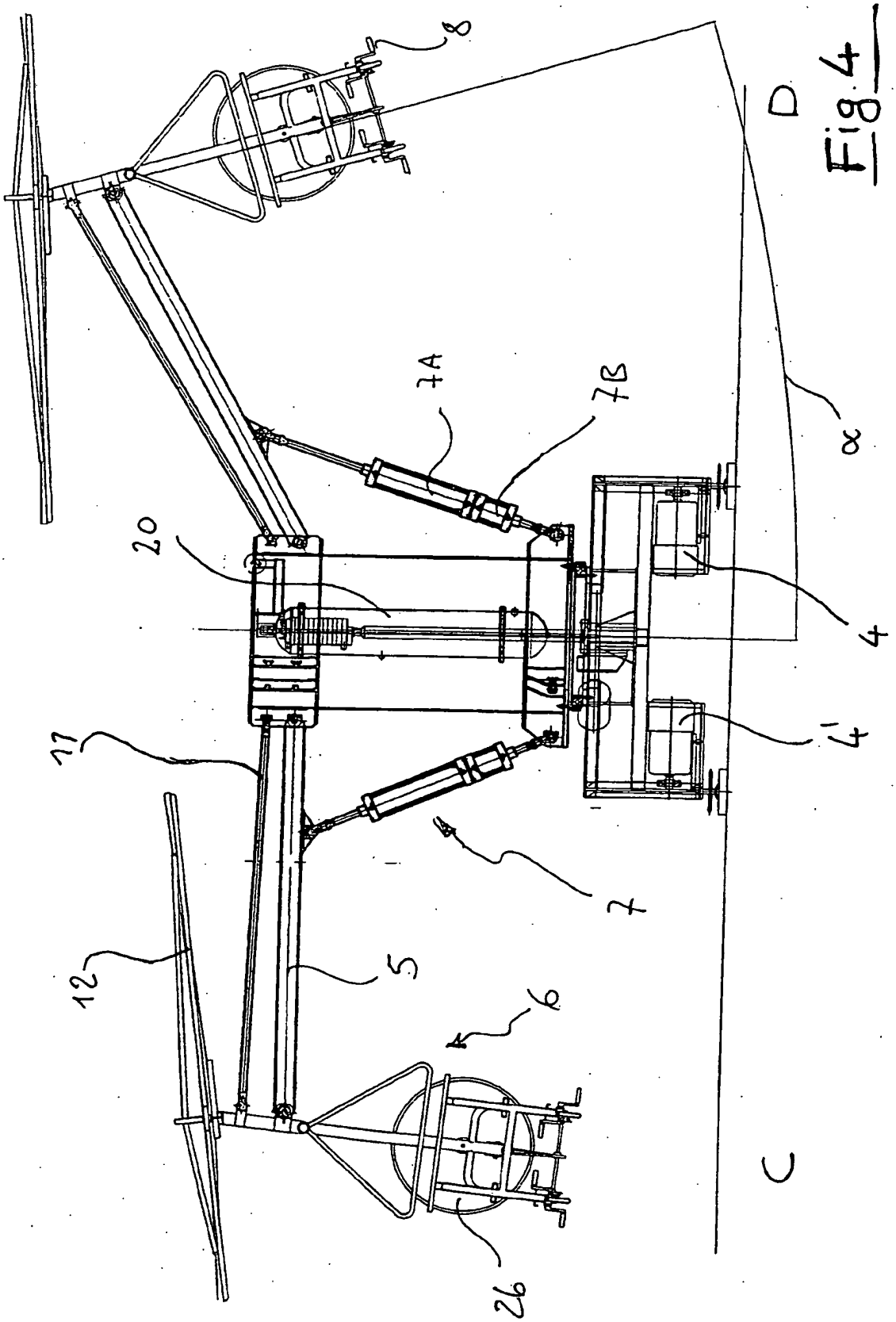

Fig.4

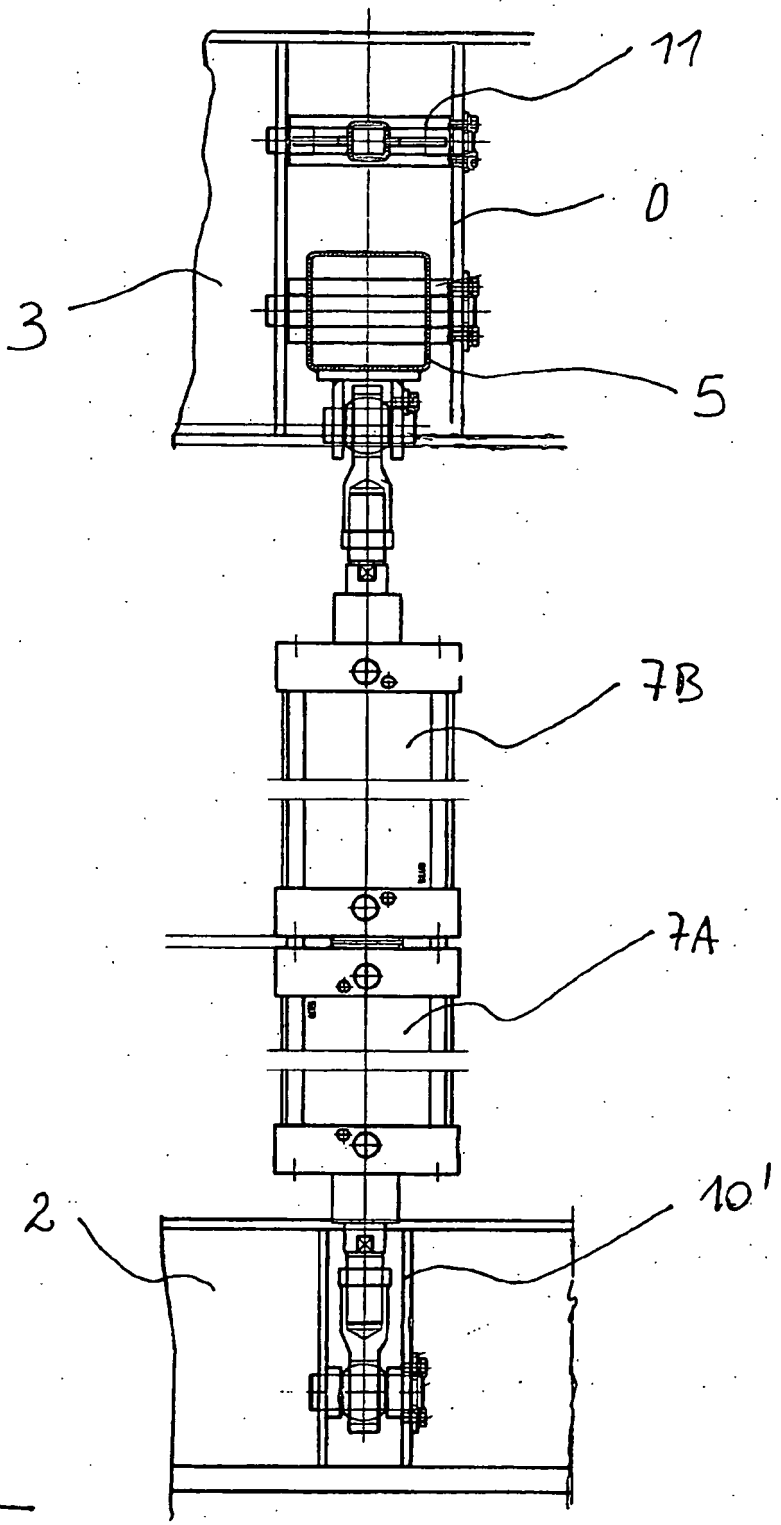

Fig. 5

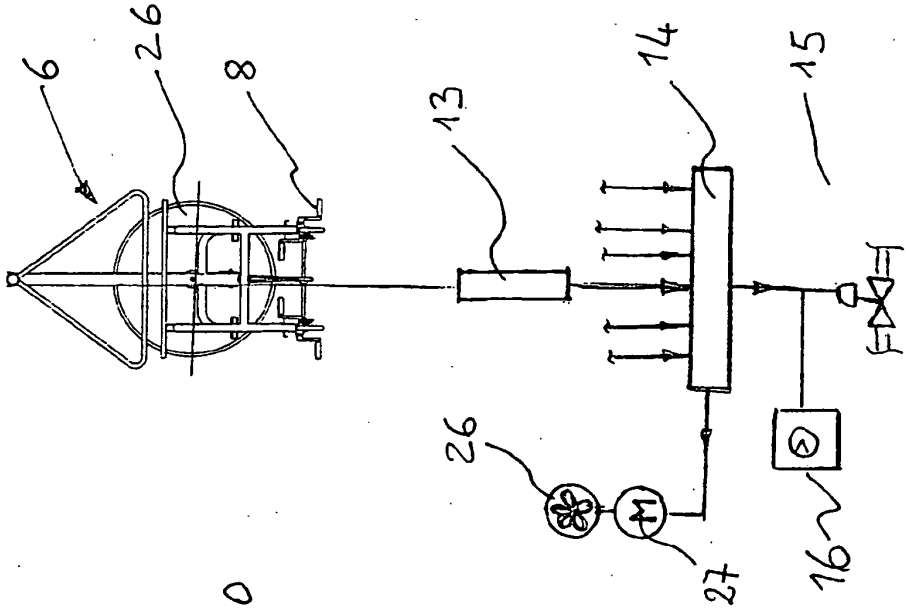
6
26
8
13
14
15
26
27
16

Fig.8

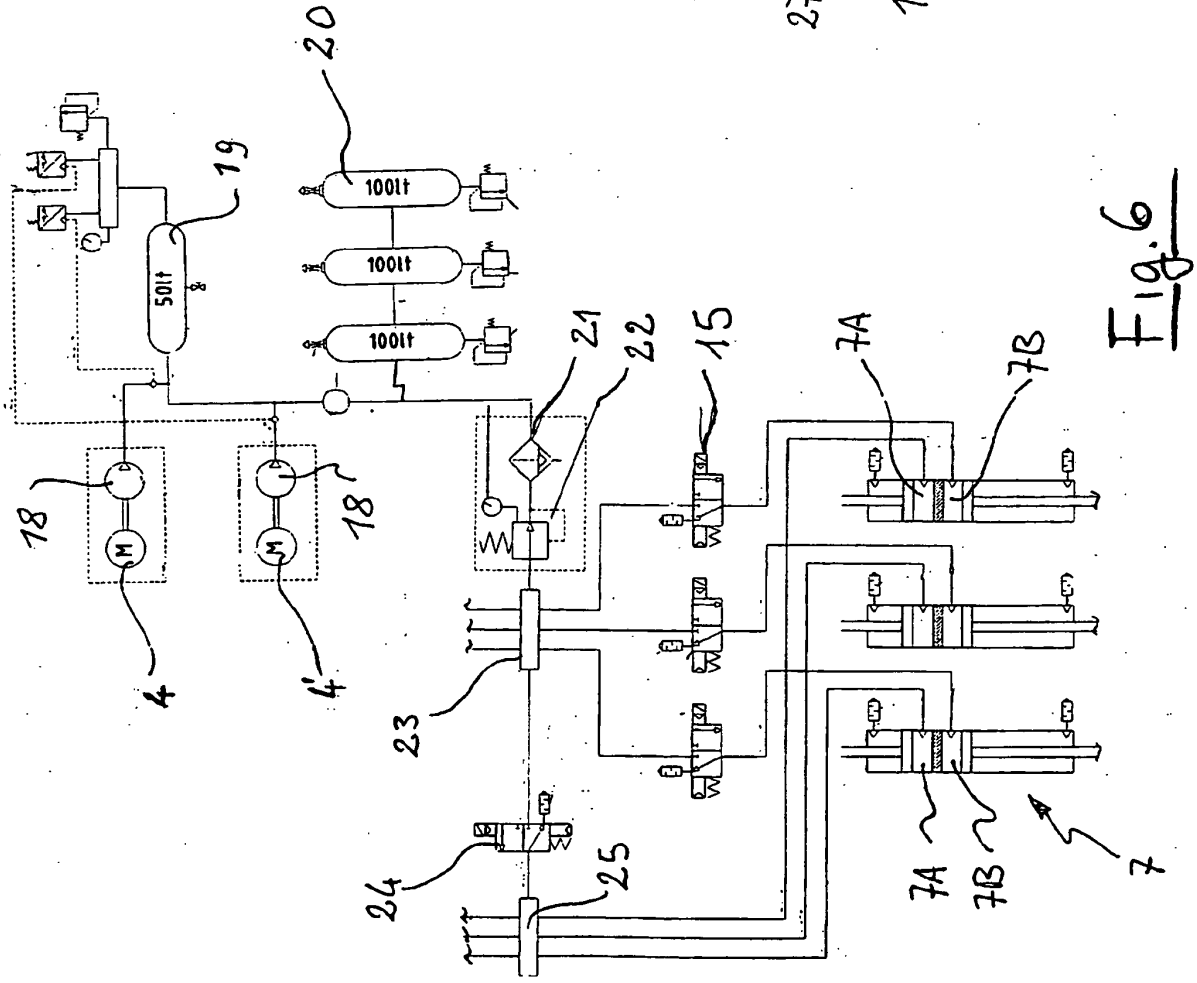
20
100lt
100lt
100lt
19
50lt
18
18
4
4'
21
22
15
7A
7B
23
24
25
7A
7B
7

Fig.6

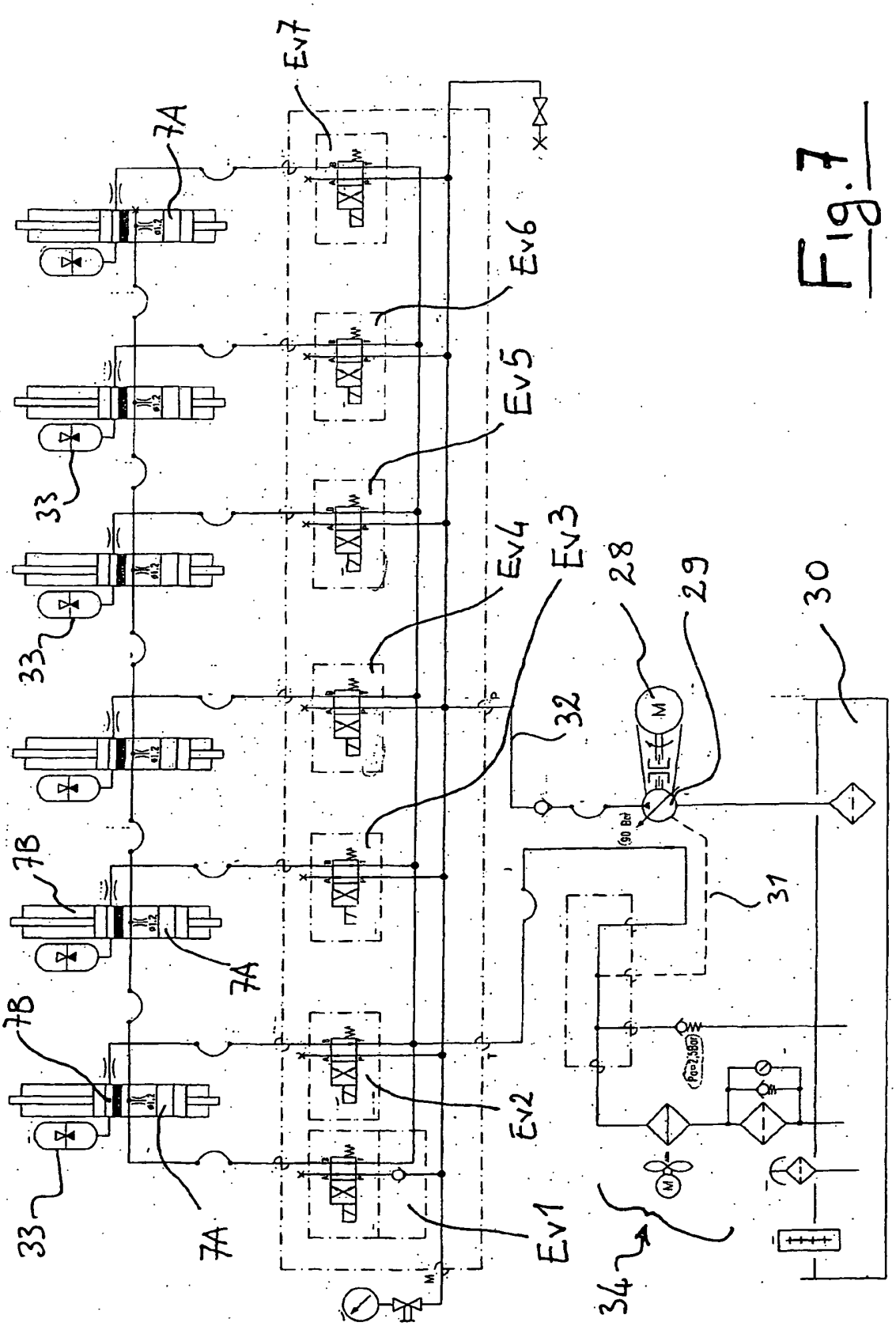

Fig. 7

REFERENCES CITED IN THE DESCRIPTION

This list of references cited by the applicant is for the reader's convenience only. It does not form part of the European patent document. Even though great care has been taken in compiling the references, errors or omissions cannot be excluded and the EPO disclaims all liability in this regard.

Patent documents cited in the description

- EP 1034823 A **[0002]**
- FR 2618690 A **[0003]**