United States Patent

Reimer et al.

[15] **3,654,883**

[45] **Apr. 11, 1972**

[54] THREAD CONTROL MECHANISM FOR SEWING MACHINES

[72] Inventors: **George M. Reimer**, Elmwood Park; **Frederick M. Klose**, Chicago, both of Ill.

[73] Assignee: **Union Special Machine Company**, Chicago, Ill.

[22] Filed: **May 14, 1970**

[21] Appl. No.: **37,108**

[52] **U.S. Cl.** **112/245**

[51] **Int. Cl.** **D05b 49/00**

[58] **Field of Search** 112/241–248, 254, 112/255, 218

[56] **References Cited**

UNITED STATES PATENTS

2,997,010	8/1961	Hughes	112/254
3,489,115	1/1970	Marforio	112/254 X
3,083,661	4/1963	Patrick	112/242

FOREIGN PATENTS OR APPLICATIONS

627,674	8/1949	England	112/242

Primary Examiner—Jordan Franklin
Assistant Examiner—George H. Krizmanich
Attorney—Diller, Brown, Ramik & Holt

[57] **ABSTRACT**

This disclosure relates to a thread control mechanism for sewing machines which will permit the machine operator to adjust the tightness of the stitch in accordance with the requirements of the particular work being sewn. The needle thread control mechanism includes a bracket plate which is conveniently mountable on a conventional sewing machine frame and which has mounted thereon an eyelet assembly for movement along a predetermined path and selected positioning thereof along such path so as to vary the extent of a thread loop which is formed between a thread tensioning device and the needle lever thread eyelet of the sewing machine, thereby controlling the tightness of the stitch being formed.

9 Claims, 6 Drawing Figures

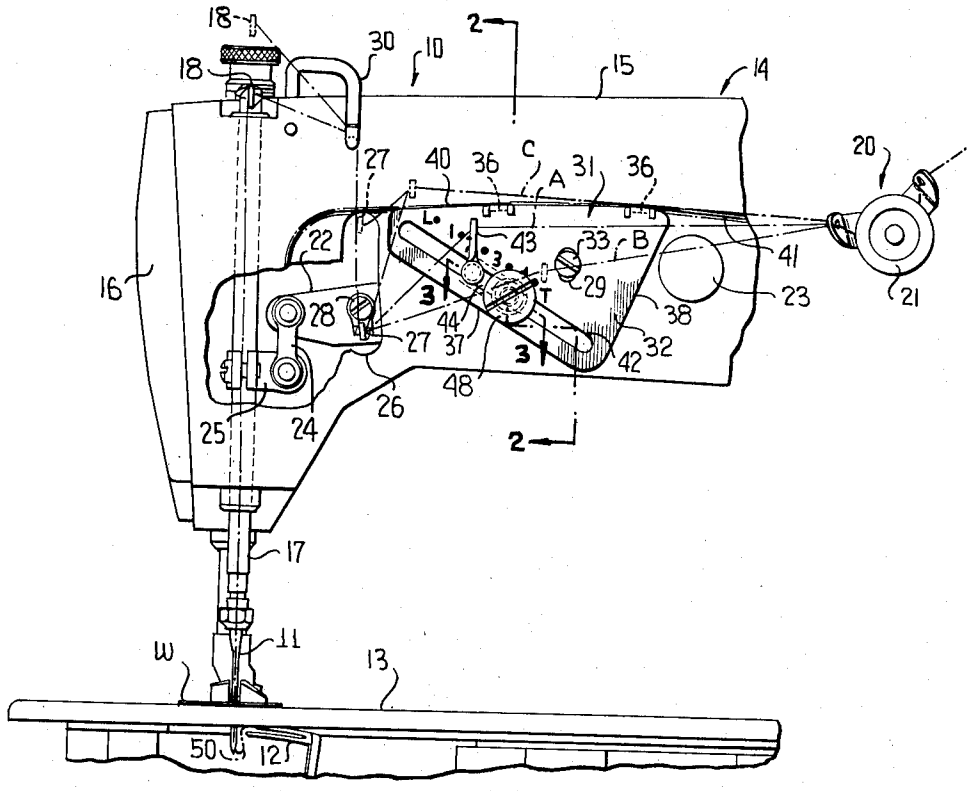

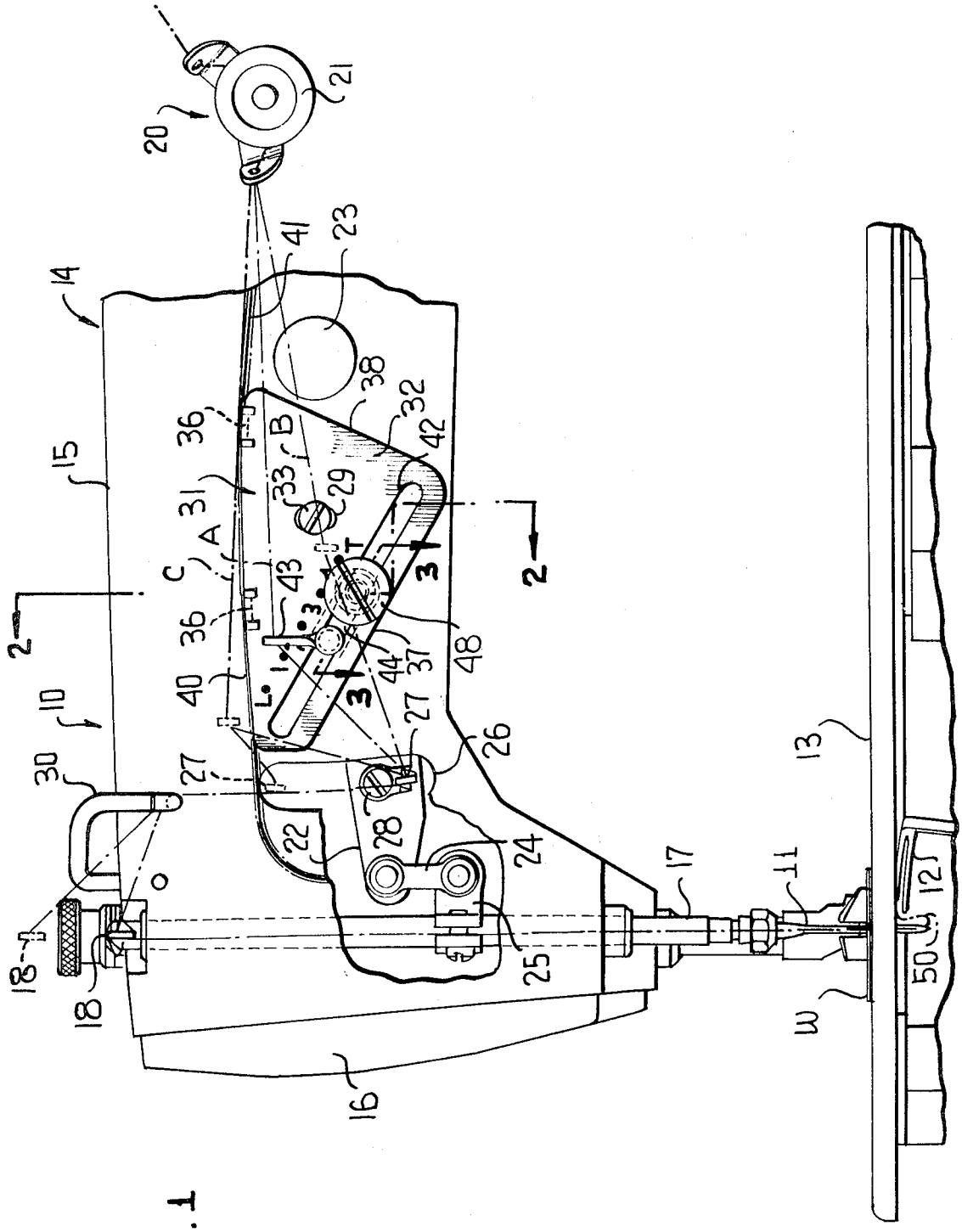

FIG. 1

INVENTORS
GEORGE M. REIMER &
FREDERICK M. KLOSE
By Dillers, Brown, Ramik & Wait
ATTORNEYS

FIG.2

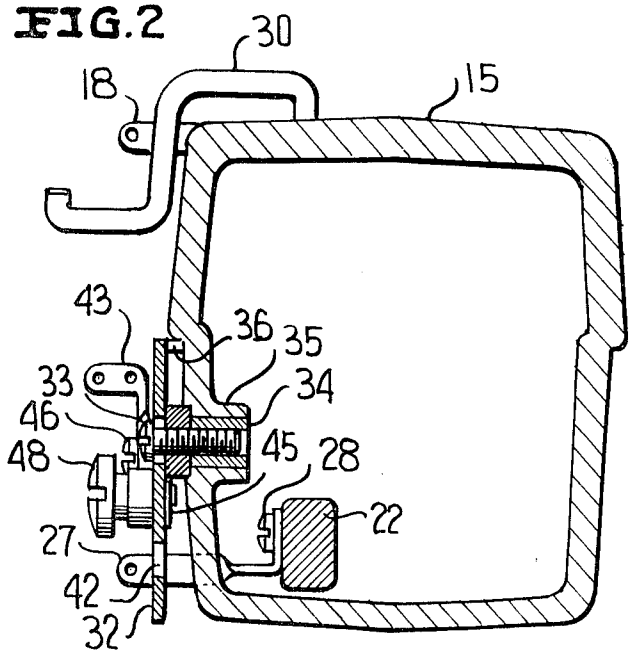

FIG.3

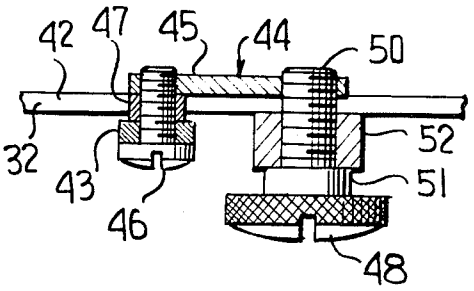

FIG.4

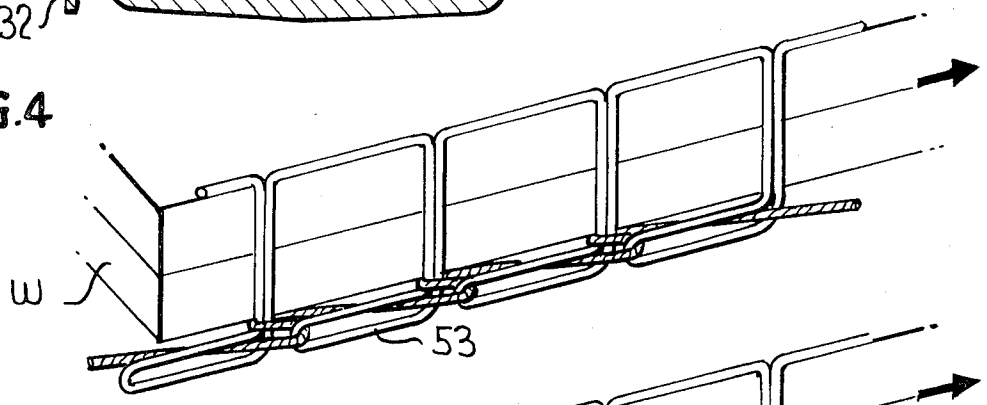

FIG.5

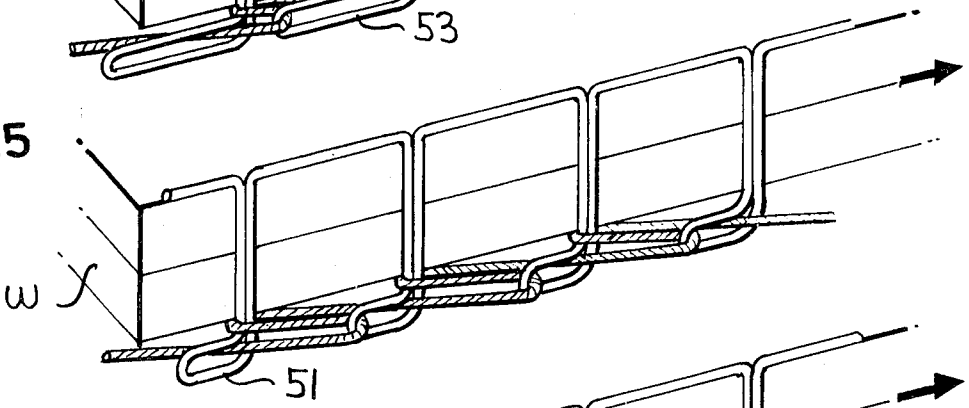

FIG.6

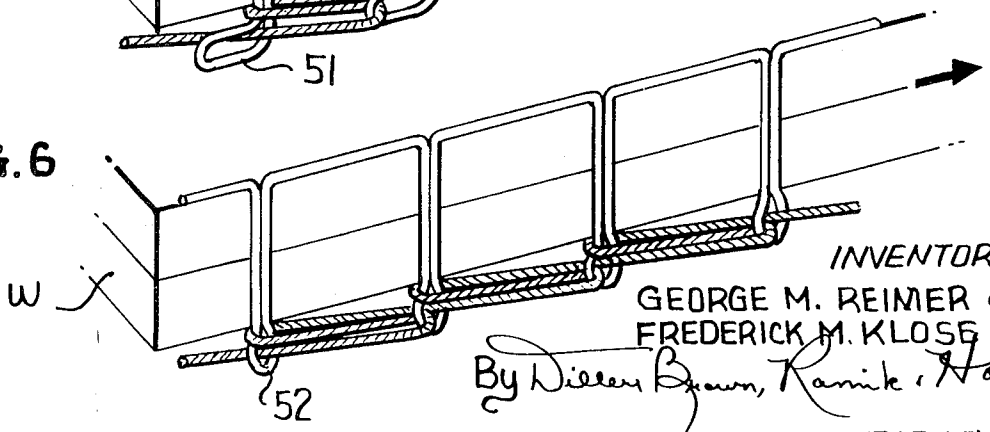

INVENTORS
GEORGE M. REIMER &
FREDERICK M. KLOSE
By Dillon Brown, Ramik & Holt
ATTORNEYS

THREAD CONTROL MECHANISM FOR SEWING MACHINES

This invention specifically relates to a modification or attachment for a conventional chainstitch sewing machine which permits ready adjustment by the machine operator of the tightness of the chainstitch in accordance with the work being sewn.

BACKGROUND OF THE INVENTION

The development in the manufacture of garments over the past few years brought on an ever growing demand for sewing machines capable of producing loose stitches. One important reason for this was the occurrence of seam pucker in the production of "permanent press" or "durable press wear." It was found that this pucker was mainly caused by the shrinkage of the seam threads during the shape welding process of such wear, which usually includes treating of the garment material with a reactant finish and curing of the finish by placing the garment into a hot oven. It has been recognized that seam pucker could be reduced considerably by applying loose stitching.

In the past, loose stitches have not been considered desirable in the assembly of garments mainly because of their bulkiness especially in the formation of chainstitches, the consumption of considerably more thread per stitch and, last, but not least, the inevitable "grin." "Grin" is the showing of thread sections between two workpieces attached to one another.

In order to produce an acceptable loose stitch, a thread control mechanism is needed which can be adjusted to meet various sewing conditions arising from varying properties of the individual type of materials. Mechanism has been provided which will accomplish this goal on certain special classes of chainstitch machines. However, the known mechanism is quite complex and costly as well as being limited to a specific type machine.

BRIEF DESCRIPTION OF THE INVENTION

In accordance with this invention, there has been provided a needle thread control mechanism which accomplishes the above-identified goals in a different, simpler and less expensive manner from prior mechanisms, and which needle thread control mechanism, while it is primarily intended for use with chainstitch sewing machines, may be utilized in conjunction with lockstitch machines.

The needle thread control mechanism includes a bracket plate which is configurated for mounting on the arm of the machine frame in a securely fixed position by means of a single screw type fastener. The bracket plate is provided with a guideway in the form of a slot which extends transversely of the flow path of thread from the customary thread tensioning device to the customary needle lever thread eyelet and there is mounted for movement along and fixedly positioning along the guideway of the bracket plate an eyelet assembly receiving the thread with the position of the eyelet assembly controlling the extent of the loop which is formed in the thread by the movement of the needle lever thread eyelet during the operation of the machine.

The above briefly described needle thread control mechanism accomplishes the following objects:

1. To provide a thread control mechanism for two thread sewing machines which enables an operator to change the machine controlled manipulation of the needle thread so as to cause the formation of either tight or loose stitches over a wide range.

2. To provide a thread control mechanism as mentioned above which can be quickly and precisely adjusted to meet various sewing conditions without requiring any changes in the setting of the usual tension means.

3. To provide a needle thread control mechanism which is compact in construction, requires very little space and can be mounted for better supervision by the operator on the front face of the overhanging arm of a sewing machine having a thread carrying needle and a thread carrying loop-taker.

4. To provide needle thread control mechanism having two stationary thread guides arranged on the sewing machine frame in a certain spacial relationship to each other, means for changing said relationship, movable thread guide means adapted for reciprocating movement in a vertical plane to manipulate the needle thread between said stationary thread guide means, the effectiveness of said thread manipulation depending thereby on the degree of change of said spacial relationship to place more or less thread into the system to form a tighter or looser stitch.

5. To provide a needle thread control mechanism comprising at least two stationary thread guides one of which is fixedly secured to the overhanging arm of the sewing machine, while the other one is adjustably secured in an inclined slot provided in a bracket plate fastened to the overhanging arm.

6. To provide a needle thread control wherein adjustment of said one adjustable thread guide along said inclined slot in said bracket plate will cause said spacial relationship between said two stationary thread guides to be varied in both the horizontal and vertical direction, and wherein indica means are provided along said slot.

7. To provide a needle thread control mechanism wherein the combined function of said stationary thread guide means and said movable thread guide means can be regulated by varying said spacial relationship between said stationary thread guides in the vertical and horizontal and thereby enable a precise timing of the stitch setting and thread pull off action of the mechanism relative to the upward or downward stroke of the needle.

With the above and other objects in view that will hereinafter appear, the nature of the invention will be more clearly understood by reference to the following detailed description, the appended claims and the several views illustrated in the accompanying drawings:

In the drawings:

FIG. **1** is a fragmentary side elevational view of a conventional chainstitch sewing machine having mounted thereon the needle thread control mechanism.

FIG. **2** is a transverse vertical sectional view taken along the line **2—2** of FIG. **1** and shows the details of only those portions of the sewing machine to which this invention relates, and most specifically the details of the needle thread control mechanism.

FIG. **3** is an enlarged fragmentary generally horizontal sectional view taken along the line **3—3** of FIG. **1** and shows specifically the mounting of the eyelet assembly on the bracket plate.

FIGS. **4**, **5** and **6** are enlarged schematic views showing the various thread looseness or tightness which may be obtained with the needle thread control mechanism.

It is to be understood that the machine installation of the needle thread control mechanism is only a typical installation and the invention is not limited to the particular machine illustrated. However, for the purpose of understanding the invention, it is to be understood that the illustrated machine, which is identified by the numeral **10**, is a chainstitch sewing machine of the type sold by Union Special Machine Company of Chicago, Illinois, under the class 56300. The machine **10** is equipped with a reciprocating eye pointed needle **11** and a thread carrying looper **12**, which looper **12** is disposed below a conventional cloth plate **13**. The thread carrying looper **12** is mounted and actuated in a conventional manner to have endwise needle loop seizing and shedding movements and sideways movements designed to present a thread triangle for entry of the descending needle **11**. The illustrated machine **10** is adapted to produce a two thread chainstitch of the type known as a **401** stitch in accordance with known federal standards.

The sewing machine **10** also includes a frame **14** of which a portion only of the usual overhanging arm **15** thereof is illustrated. The arm **15** carries the usual needle head in which there is journalled the usual reciprocatory needle bar **17**. The lower end of the needle bar carries the needle **11**, and the upper end portion of the needle bar **17** is provided with an

eyelet 18 which moves with the needle bar 17 and serves as a first thread take-up means.

The machine frame 14 is also provided with the usual adjustable thread tensioning device or means, which is identified by the numeral 20, and which is provided with the usual spring biased discs 21.

It is to be understood that the machine 10, with the exception of the needle thread control mechanism which is the subject of this invention, is a conventional machine, the details of which are more fully disclosed in the patent to Attwood, et al., U.S. Pat. No. 3,418,955, granted Dec. 31, 1968.

The needle drive mechanism of the machine 10 includes a needle lever 22 which is mounted for rocking movement on a stud 23 which is disposed transversely in the overhanging arm 15 and journalled in suitable bearings (not shown). A needle bar link 24, having one end pivotally connected to the end of the needle lever 22 and its other end to a needle bar connecting bracket 25 secured to the needle bar 17, serves as a driving connection to reciprocate the needle bar 17 in the needle head 16 in accordance with the oscillation of the needle lever 22.

Between the overhanging arm 15 and the needle head 16, there is provided, in the front wall of the frame 14, a substantially vertically extending slot 26 of a slightly arcuate shape through which extends outwardly a needle lever thread eyelet 27 which is carried by the needle lever 22. The eyelets 18 and 27 constitute the two movable needle thread guides in the control mechanism and function as thread take-up and pull off means. The eyelet 27 is rigidly secured to the needle lever 22 by means of a screw 28.

As is clearly shown in FIGS. 1 and 2, projecting upwardly from the top of the overhanging arm 15 is a wire 30 having several bends formed therein. The wire 30 extends first upwardly from the needle arm 15 and then towards the left, then downwardly and again towards the left, and finally a little upwardly. The left end of the wire 30, as viewed in FIG. 2, is disposed in substantially a vertical plane above the slot 26, as viewed in FIG. 1. Thread passes from the eyelet 27 over the wire 30, through the eyelet 18 and down to the needle 11. The wire 30 forms a fixed thread guide.

As is best shown in FIG. 1, at the right side of the slot 26, the machine 10 is provided with a needle thread control mechanism in accordance with this invention, the mechanism being generally identified by the numeral 31. The needle thread control mechanism includes a generally triangular bracket plate 32 which is rigidly secured to the front wall of the overhanging arm 15 by means of a single screw 33 and forms a support surface for an eyelet assembly to be described hereinafter. The screw 33 extends through a vertically elongated hole 29 in the bracket plate 32, thereby permitting the bracket plate 32 to be adjusted minutely up and down on the overhanging arm 15. The screw 33 is threaded into an adapter plug 34 (FIG. 2) which, in turn, is screwed into a suitably threaded bore 35 in the frame wall of the overhanging arm 15. In order to facilitate the mounting of the bracket plate 32, the upper edge thereof is provided with a pair of lips 36 which extend at right angles to the plane of the bracket plate. The lips 36 serve to abut the wall of the overhanging arm 15 in order to locate the bracket plate 32 thereagainst, as is clearly shown in FIG. 2.

The bracket plate 32 has sides 37, 38 and 40. The sides 40 carries the lips 36 and, in the illustrated machine 10, serves as a locating side against a substantially overhanging extending step-like protrusion 41 in the overhanging arm wall. The side 38 has no particular function and the side 37 extends approximately parallel to a slot or guideway 42 which is formed in the bracket plate 32 and which extends generally from the corner 37–38 to the corner 37–40. In the illustrated arrangement, the bracket plate 32 is so located that the general direction of the slot 42 is along a line extending approximately at 32° relative to the horizontal from the lower right to the upper left.

The slot 42 serves as locating means for a stationary eyelet 43 which is part of an eyelet assembly, generally referred to by the numeral 44. The eyelet assembly 44 is best illustrated in FIG. 3 and may be shifted along the slot 42 and secured in any desired position thereof. The eyelet assembly 44 includes a plate 45 which has threaded thereinto adjacent one end thereof a screw 46 which is also received in a base portion of the eyelet 43. A spacer collar 47 is carried by the screw 46 between the plate 45 and the eyelet 43 and is of a thickness in excess of the bracket plate 32 so that it may function as a guide within the slot 42.

A second and larger screw 48 is threaded into the opposite end of the plate 45. The screw 48 has a threaded shank portion 50 of a diameter substantially corresponding to the width of the slot 42 whereby the shank 50 also functions as a guide for the eyelet assembly 44 within the slot 42. Screw 48 is also provided with a shoulder portion 51 which presses against a collar 52 carried by the shank 50. When the screw 48 is tightened down, the collar 52 cooperates with the plate 45 to clamp the bracket plate 32 therebetween and thus lock the eyelet assembly 44 in an adjusted position.

With reference to FIG. 1, when it is desired to adjust the tightness or looseness of the stitch being formed, it is merely necessary for the operator to loosen the screw 48, slide the eyelet assembly 44 to the desired position and again lock the eyelet assembly 44 in place by tightening down on the screw 48. At this time, it is particularly pointed out that the eyelet 43 is arranged so that it extends in a substantially vertical plane while its thread conducting opening extends along a substantially horizontal axis.

As is indicated by the indicia on the bracket plate 32, when the eyelet assembly 44 is moved up to the left, the stitch is loosened while when the eyelet assembly 44 is moved downwardly to the right, the stitch is tightened. In FIG. 1 there has been illustrated three different paths along which thread may be conducted to the needle 11. These paths correspond to three different adjustment positions chosen at random of the stationary thread guide 43. The paths are identified as paths A, B and C. It is to be noted that these thread paths vary only between the thread tensioning device 20 and the eyelet 27. The thread path from the eyelet 27 to the needle 11 remains constant and is over the wire 30, through the eyelet 18 and down to the needle 11.

In FIG. 1, the needle 11 is shown in its extreme down position with the looper 12 retracted and a needle thread loop 50 shed off from the looper 12.

From the diagrammatic layout of the illustrated needle thread paths (randomly selected out of an indefinite number of paths), it will be apparent that the direction and length of the path of the needle thread between the thread tensioning device 20 and the work W depends on the adjustment of the eyelet 43 as controlled by the position of the eyelet assembly 44 in the slot 42, and may vary considerably from adjustment to adjustment. For the purpose of illustrating and explaining the function of the invention, there has been chosen certain adjustment positions of which a medium one is designated A and the two extreme ones are designated B and C.

Beginning with adjustment position A, the compounded distance of the path of travel of the needle thread between the thread tensioning device 20 and work W is approximately equal in both directions of the needle stroke. Naturally, some thread is always being used up during the formation of a stitch and the advancement of the work in the machine so that during an upward or downward stroke of the needle and the associated take-up means 18 and 27, a shortage of thread occurs in the system at one time or another. At setting A, the take-up movement of eyelets 18 and 27 will keep the needle thread taut when the needle begins to rise. This will cause the stitch to be set and due to occurring thread shortage, new thread will be pulled off from the supply. The stitch formed thereby is best illustrated in FIG. 5 wherein it is shown that the needle thread loop 51 is not fully pulled up into the work W causing a stitch that is neither very tight nor very loose.

Considering next the setting of the eyelet assembly 44 to provide the thread path B, it will be noted that the com-

pounded length of the thread path is shorter when the needle and the movable eyelets **18** and **27** are in their downward position. This means that during the downward stroke of the needle **11** and eyelets **18** and **27**, less thread is added to the system than during their upward stroke. From this, it follows that no tension is built up in the thread during the downward stroke of the needle **11** since at this time there is now sufficient thread in the system. However, in forming the stitch in advancing the work W, thread is lost. Further, during the upward stroke of the needle all slack in the thread is being taken up by the eyelets **18** and **27** so that tension builds up gradually in the thread. This causes first the needle thread to be pulled up tightly in the material to set the stitch and to pull off thread from the supply when the needle reaches the upper end of its stroke. With reference to FIG. **6**, it will be seen that there is a good example of how the relatively tight stitch will appear, the resultant loops **52** having substantially no horizontal component.

It will be apparent from the foregoing that the further the eyelet **43** is moved downwardly and to the right, the tighter a stitch will be formed. Accordingly, if the eyelet **43** is adjusted downwardly and to the right from its solid line position of FIG. **1**, the loop of the stitch will become progressively tighter to a maximum tightness when the eyelet **43** is in its lowermost position.

Conversely, the higher the eyelet **43** is adjusted to the slot **42**, the looser a stitch will result. This is due to the fact that the path of the needle thread at the extreme end of the downward stroke of the needle **11** and the eyelets **18** and **27** is considerably longer than the thread path at the same setting of the eyelet **43** at the top of the needle stroke. It is when the eyelet assembly **44** is adjusted to produce the thread path C or in any similar adjustment where the needle thread path at the end of the downward stroke is longer than at the end of the upper stroke, that the particular location of the wire **30** achieves importance as an additional take-up means because it will take up all of the slack in the thread during the final phase of the downward movement of the needle **11**. Up to this point, there is sufficient thread in the system to keep the thread loose. At this particular setting of the eyelet assembly **44**, the final phase commences with the shedding of the needle thread loop from the looper **12**. This will cause:

1. the stitch to be set and
2. new thread to be pulled off from the supply.

The stitch resulting from the setting of the eyelet assembly **44** to produce the thread path C is illustrated in FIG. **4** where it will be readily apparent that the needle thread loop **53** extends far back on the underside of the work W. In this particular setting of the eyelet assembly **44**, the loop **53** extends almost to the next stitch. On the following upward stroke of the needle **11** and the eyelets **18** and **27**, all of the thread that has been drawn into the system will now be played out so that there is plenty of thread available. For this reason, no tension is created in the needle thread during the upward stroke of the needle and consequently no thread is pulled either out of the formed loop or for the supply during this phase.

From the foregoing, it will be readily apparent that the needle thread control mechanism **31** enables an operator to change at will the length of the path along which the needle thread is conducted to the needle **11** and thereby effect the production of a looser or tighter stitch. All this can be readily accomplished by simply shifting the stationary eyelet **43** along the slot **42** and affixing it in the desired position.

Although only a preferred embodiment of the invention has been specifically illustrated and described herein, it is to be understood that minor variations may be made in the needle thread control mechanism without departing from the spirit and scope of the invention, as defined by the appended claims.

We claim:

1. A needle thread control mechanism for sewing machines of the type including a frame and a work support, and a thread carrying needle mounted in said frame for endwise reciprocatory movement towards and away from said work support, actuating means in said frame for effecting said endwise reciprocatory movement of said needle to penetrate work being sewn and to deposit a thread loop below the work, thread tensioning means for controlling the flow of thread from a source to said needle, a fixed thread guide along a path of thread flow between said thread tensioning means and said needle, a first movable thread take-up guide means for receiving thread in the flow of the thread from said fixed thread guide to said needle and forming a first thread loop, said first movable thread take-up guide means being operatively connected to said actuating means for forming a first thread loop upon the retraction of said needle, second movable thread take-up guide means for receiving thread in the flow of the thread from said thread tensioning means to said fixed thread guide and forming a second thread loop, said second movable thread take-up guide means being operatively connected to said actuating means for forming a second thread loop upon the projection of the said needle, and a thread guide unit mounted on said frame for receiving thread in the flow of the thread from said thread tensioning means to said second movable thread take-up guide means and for controlling the size of the second thread loop and for preselecting the amount by which the size of the second thread loop exceeds the size of the first thread loop, thereby controlling the size of the thread loop deposited by the needle, and the tightness of the stitch, said thread guide unit comprising a support surface having a guideway therein extending transversely of the normal path of thread from said thread tensioning means to said second movable thread take-up guide means, and an eyelet assembly having means for mounting said eyelet assembly for movement along said guideway and for retention in an adjusted position.

2. The needle thread control mechanism of claim **1** wherein said eyelet assembly includes a support plate, guide means on said support plate engaged in said guideway, and readily releasable clamp means carried by said support plate.

3. The needle thread control mechanism of claim **1** wherein said guideway extends diagonally of the last mentioned path of thread flow.

4. The needle thread control mechanism of claim **1** wherein said guideway is in the form of a slot, and said eyelet assembly includes a support plate carrying a pair of guides extending through said slot, one of said guides carrying a projecting thread eyelet and the other of said guides being adjustable in effective length and together with said support plate forming a clamp.

5. The needle thread control mechanism of claim **4** wherein said support surface is defined by a separate bracket plate releasably secured to said frame, and said slot is formed in said bracket plate.

6. The needle thread control mechanism of claim **1** wherein said support surface is defined by a separate bracket plate releasably secured to said frame.

7. The needle thread control mechanism of claim **1** wherein said support surface is defined by a separate bracket plate releasably secured to said frame, said frame having an elongated shoulder, said bracket plate having a mounting surface along one edge thereof, and a single releasable fastener securing said bracket plate to said frame.

8. A needle thread control mechanism specifically adapted for use with sewing machines of the type including a thread tensioning device and a needle lever thread eyelet, said needle thread control mechanism comprising a bracket plate having means for mounting the same on a frame of a sewing machine between a thread tensioning device and a needle lever thread eyelet thereof, a guideway on said bracket plate, and an eyelet assembly mounted on said bracket plate for movement along and selective fixed positioning along said guideway, said guideway being in the form of a slot, and said eyelet assembly includes a support plate carrying a pair of guides extending through said slot, one of said guides carrying a projecting thread eyelet and the other of said guides being adjustable in effective length and together with said support plate forming a clamp.

9. A needle thread control mechanism specifically adapted for use with sewing machines of the type including a thread tensioning device and a needle lever thread eyelet, said needle thread control mechanism comprising a bracket plate having means for mounting the same on a frame of a sewing machine between a thread tensioning device and a needle lever thread eyelet thereof, a guideway on said bracket plate, and an eyelet assembly mounted on said bracket plate for movement along and selective fixed positioning along said guideway, said means for mounting said bracket plate includes spaced apart separate mounting surfaces on said bracket plate lying in different planes for engaging offset surfaces of a sewing machine frame in positive seated engagement, and single fastener means spaced from said mounting surfaces for releaseably retaining said bracket plate in place.

* * * * *